dup

TM 9-752

WAR DEPARTMENT TECHNICAL MANUAL

3-INCH GUN MOTOR CARRIAGE M10

Dissemination of [redacted] matter.—The information contained in restricted documents and the essential characteristics of restricted materiel may be given to any person known to be in the service of the United States and to persons of undoubted loyalty and discretion who are cooperating in Government work, but will not be communicated to the public or to the press except by authorized military public relations agencies. (See also paragraph 18b, AR 380-5, 28 September 1942.)

WAR DEPARTMENT *25 NOVEMBER 1943*

RESTRICTED

WAR DEPARTMENT TECHNICAL MANUAL

**TM 9-752*

3-INCH GUN
MOTOR CARRIAGE M10

WAR DEPARTMENT

25 November 1943

RESTRICTED — ***Dissemination of restricted matter.—The information contained in restricted documents and the essential characteristics of restricted materiel may be given to any person known to be in the service of the United States and to persons of undoubted loyalty and discretion who are cooperating in Government work, but will not be communicated to the public or to the press except by authorized military public relations agencies. (See also paragraph 18b, AR 380-5, 28 September 1942.)***

---

*This manual includes all pertinent information from TC 47, 13 April 1943; TC 54, 21 April 1943, TC 59, 4 May 1943; TB 700-1, 1 Jan 1942; TB 700-14, 17 Jun 1942; TB 700-15, 21 Jul 1942; TB 700-17, 22 Sep 1942; TB 700-33, 11 Feb 1943; TB 700-37, 4 Mar 1943; TB 700-38, 12 Mar 1943; TB 700-46, 9 Apr 1943; TB 700-66, 11 Jun 1943; TB 700-67, 15 Jun 1943; TB 700-68, 15 Jun 1943; TB 700-70, 21 Jun 1943; TB 700-72, 24 Jun 1943; TB 700-76, 30 Jul 1943; TB 700-81, 21 Jul 1943; TB 700-87, 29 Jul 1943; TB 700-90, 11 Aug 1943; and TB 700-9[illegible], 11 Aug 1943.

WAR DEPARTMENT
Washington 25, D. C., 25 November 1943

TM 9-752, 3-INCH GUN MOTOR CARRIAGE M10, is published for the information and guidance of all concerned.

[A.G. 300.7 (7 Sep. 43)]

BY ORDER OF THE SECRETARY OF WAR:

G. C. MARSHALL,
Chief of Staff.

OFFICIAL:

J. A. ULIO,
Major General,
The Adjutant General.

DISTRIBUTION: R 9 (4); Bn 9 & 18 (2); C 9 (5); IC 18 (10)
(For explanation of symbols, see FM 21-6.)

3-INCH GUN
MOTOR CARRIAGE M10

CONTENTS

PART THREE—ARMAMENT

PART FOUR—STORAGE, SHIPMENT AND REFERENCES

PART ONE—OPERATING INSTRUCTIONS

Section I

INTRODUCTION

1. SCOPE.

a. This operator's manual covering the 3-inch Gun Motor Carriage M10 is for the information and guidance of using arm personnel charged with the operation, maintenance, and repair of this vehicle.

b. It contains descriptions of the major units and their functions in relation to the other components of the vehicle. It provides instructions for operation, also inspection, repair and replacement of units. The manual is divided into four parts:

(1) Part One—Operating Instructions (sections I through VIII): Information and instructions chiefly for the guidance of the operating personnel.

(2) Part Two—Vehicle Maintenance Instructions (sections IX through XXIV): Information and instructions for the guidance of operating and maintenance personnel.

(3) Part Three—Armament (sections XXV through XXX): Information and instructions on armament.

(4) Part Four—Storage and Shipment: Information includes instructions on preparation of the vehicle for limited storage and domestic shipment.

c. Repairs, Modifications, and Adjustments. All repair operations, field service modifications, and service adjustment, beyond the scope or facilities of the using arms must be referred to a higher authority.

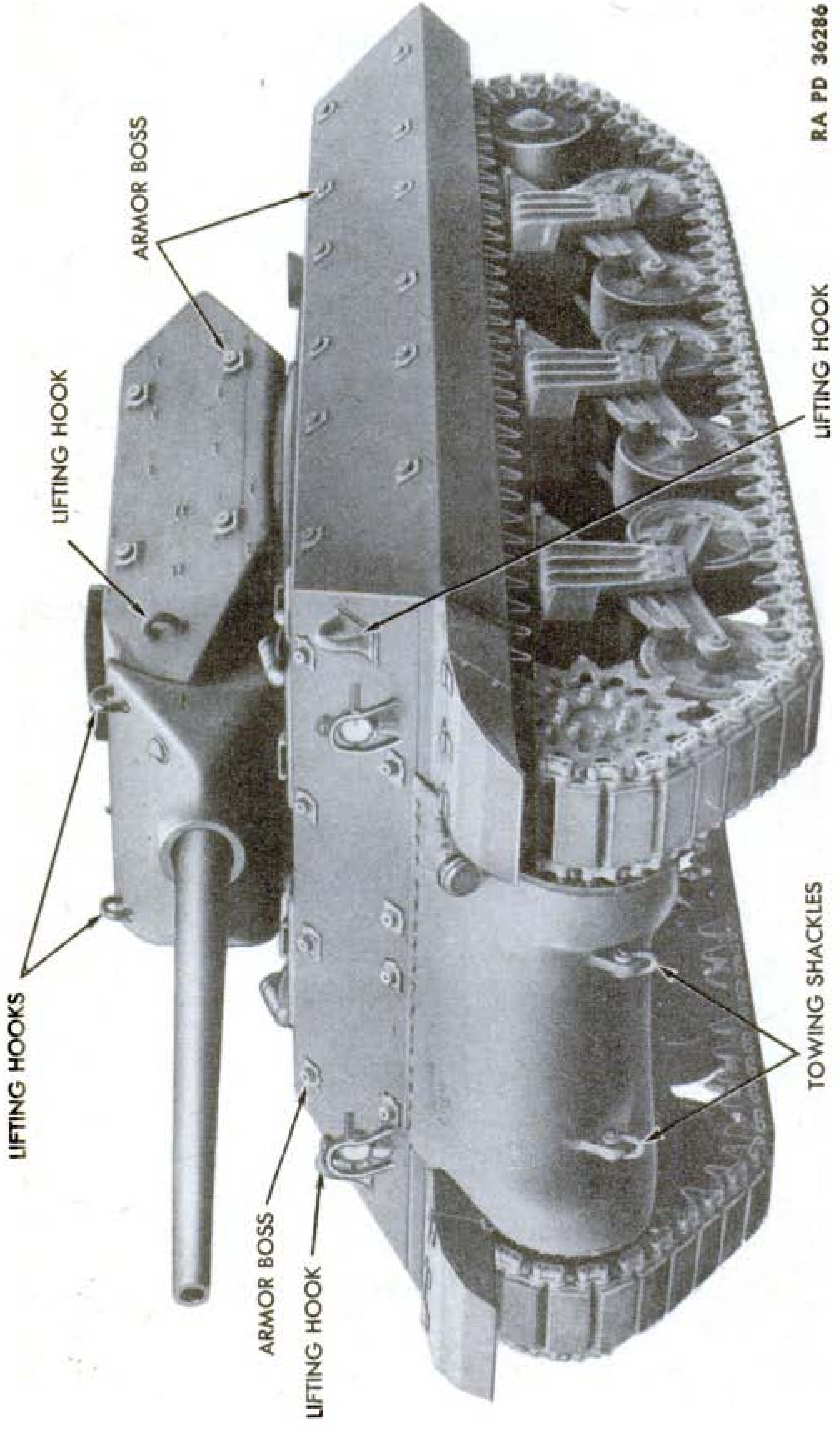

Figure 1—3-Inch Gun Motor Carriage M10—Three-quarter Front View

Section II

DESCRIPTION AND TABULATED DATA

2. DESCRIPTION.

a. The 3-inch Gun Motor Carriage M10 is an armored, full track-laying vehicle powered by twin Diesel engines.

b. Distinguishing Features. This vehicle is identified by sloping hull, turret sides, and an open turret. Counterweights attached to the rear of the turret balance the weight of the 3-inch gun. Bosses welded to the hull front, side plates, and turret side plates are for attaching auxiliary armor plate.

c. Power Unit (Twin Diesel Engines) (fig. 32). The power unit consists of two six-cylinder, two-cycle, liquid-cooled, Diesel engines mounted side by side as a single unit in a compartment at the rear of the vehicle.

d. Armament. The principal armament of the 3-inch Gun Motor Carriage M10 is a 3-inch gun M7 carried in the M5 gun mount at the front of the turret. A cal. .50 M2 HB flexible machine gun may be used in either the flexible mount in the bracket at the top rear edge of the turret, or set up on an M3 tripod mount for use outside the vehicle. Stowed inside the vehicle are a cal. .45 M1928A1 Thompson submachine gun, one cal. .30 rifle M1903, four cal. .30 M1 carbines, and one grenade launcher M1 for use with cal. .30 rifle M1903.

e. Radio and Vehicle Intercommunication Systems. The vehicle is equipped with a two-way, high-frequency, voice-type radio set (fig. 7). In addition, an intercommunication system is provided for the commander, driver, assistant driver, and gunner.

3. DIFFERENCES BETWEEN MODELS.

a. Identification. Each vehicle has an identification plate in the driver's compartment attached to the left side of hull. This plate carries the vehicle serial number, manufacturer's name, and operating data (fig. 9). The same serial number is stamped on all four towing brackets, and on the hull behind identification plate.

b. Changes in Design. Although they do not affect using arms operation or maintenance, changes have been made in the 3-inch Gun Motor Carriage M10 since earlier vehicles were manufactured.

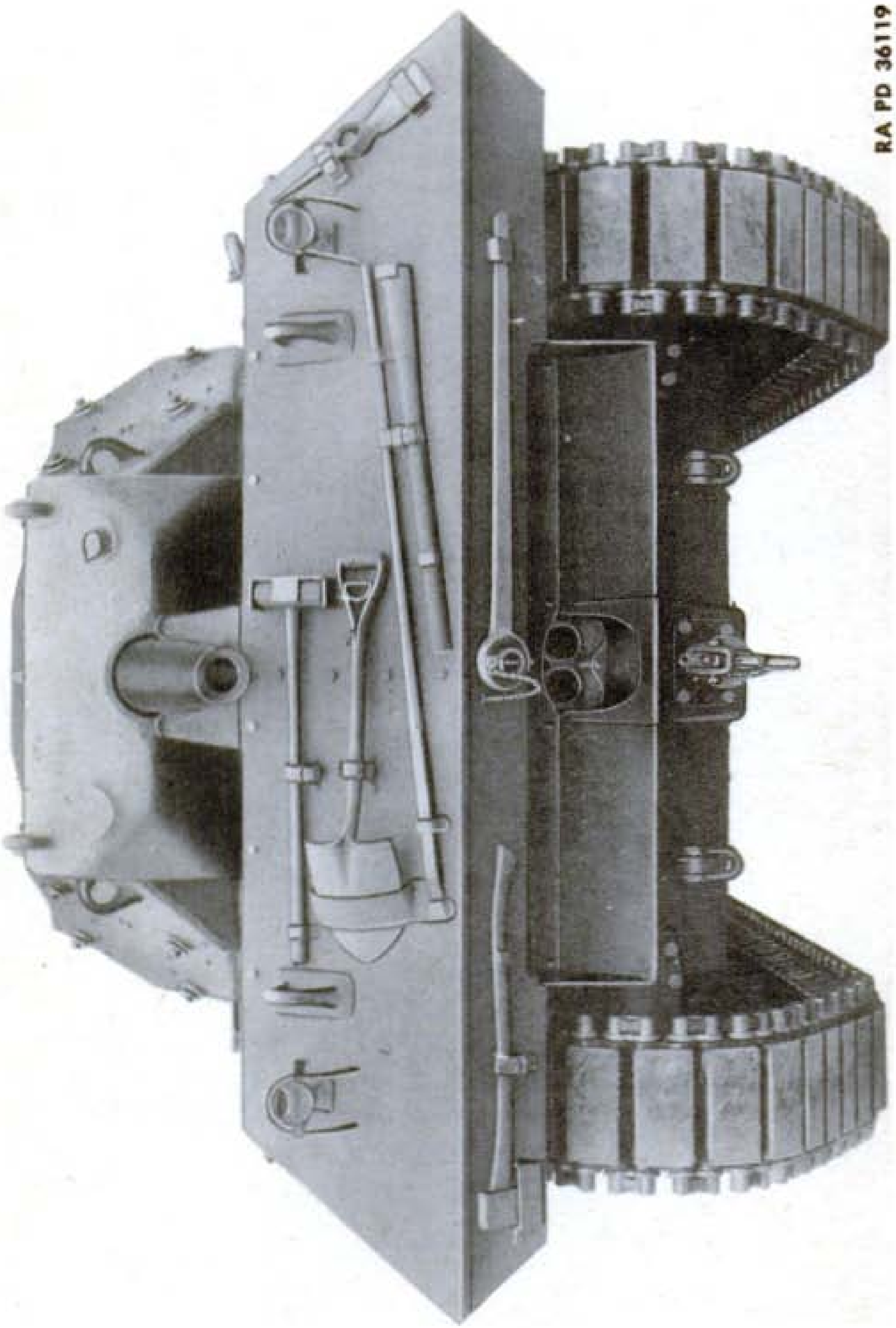

RA PD 36119

Figure 2—3-Inch Motor Carriage M10—Rear View

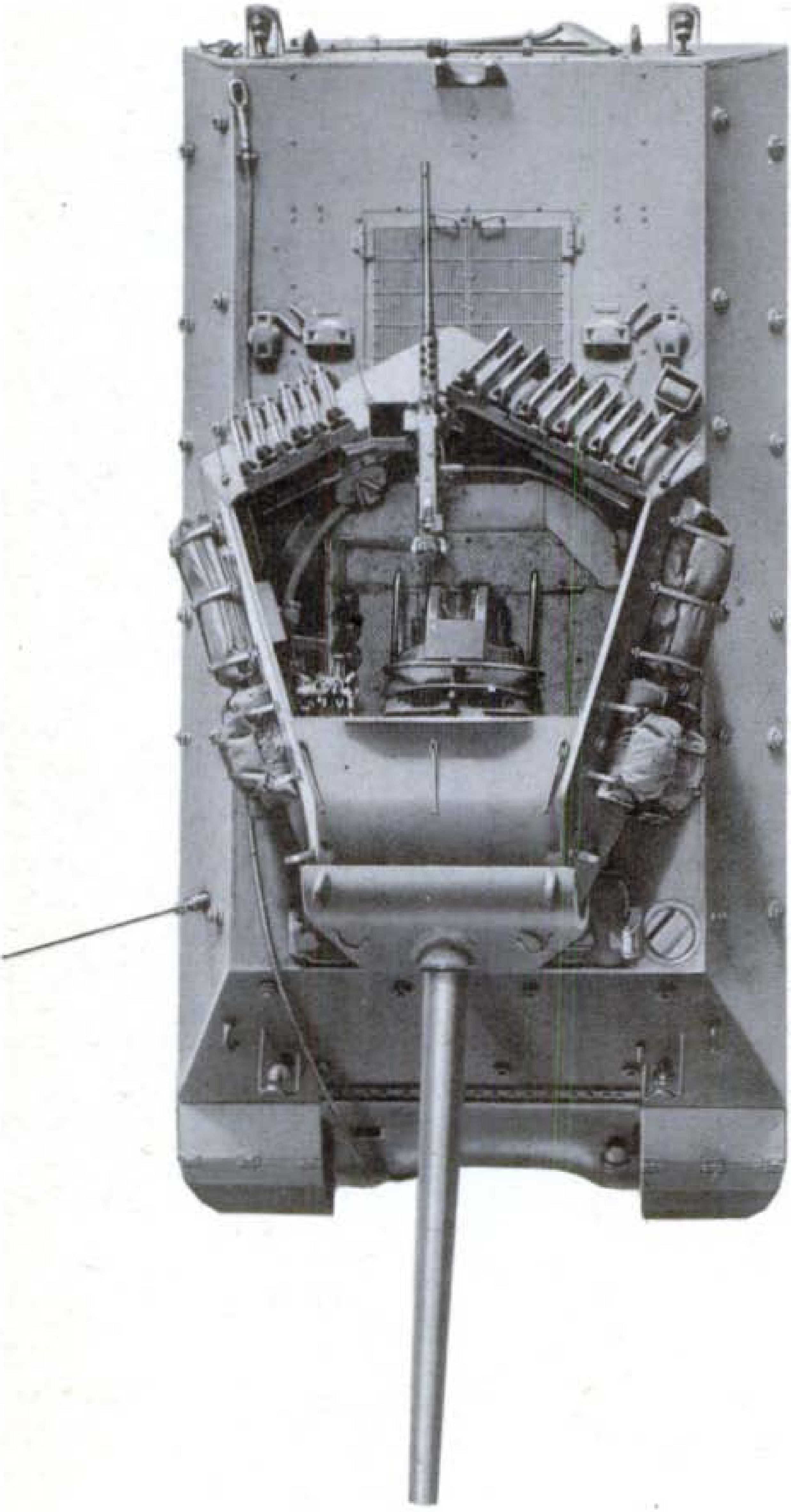

RA PD 36120

Figure 3—3-Inch Gun Motor Carriage M10 with Cal. .50 Antiaircraft Gun Mounted—Top View

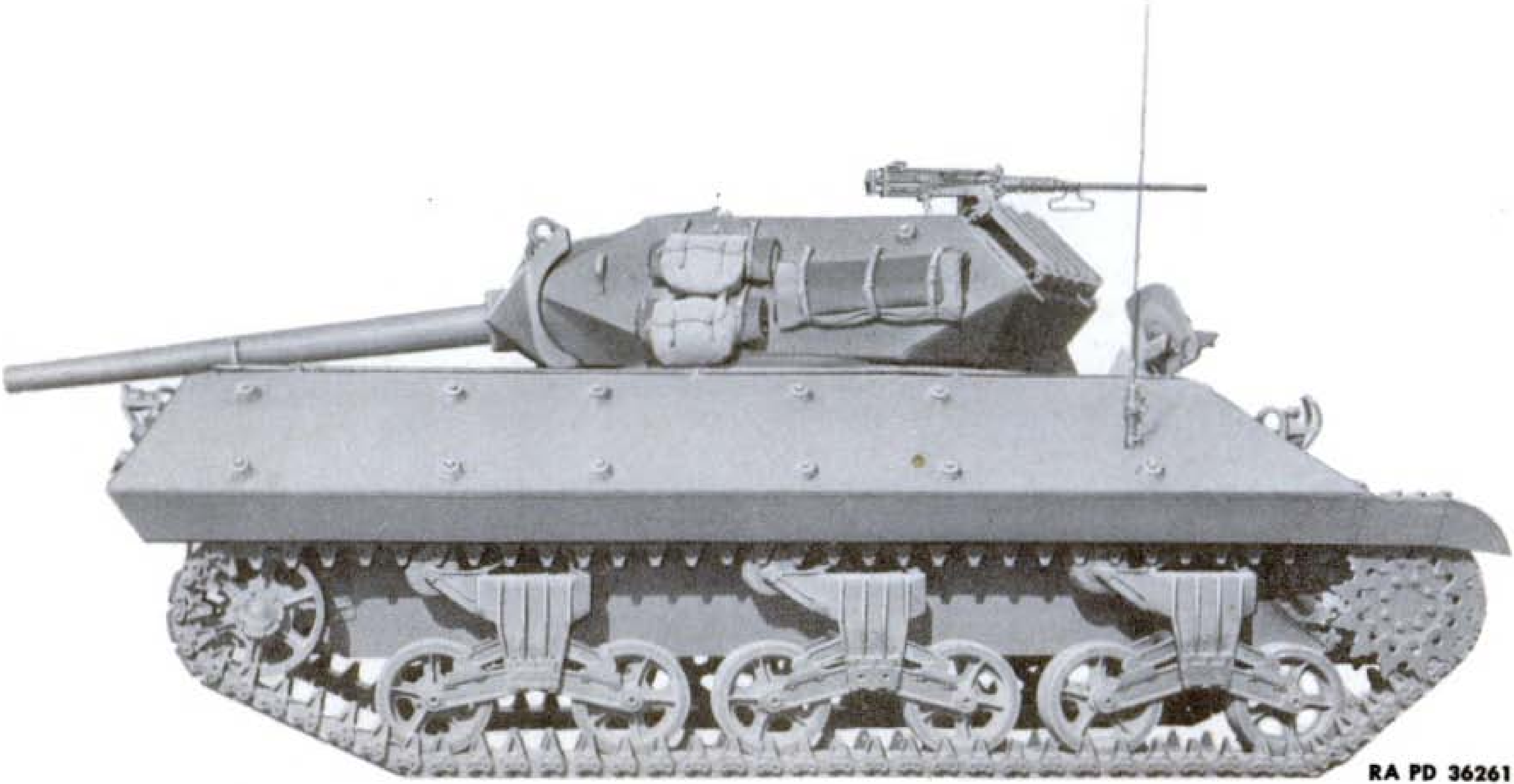

RA PD 36261

Figure 4—3-inch Gun Motor Carriage M10 with Gun in Traveling Position—Right Side View

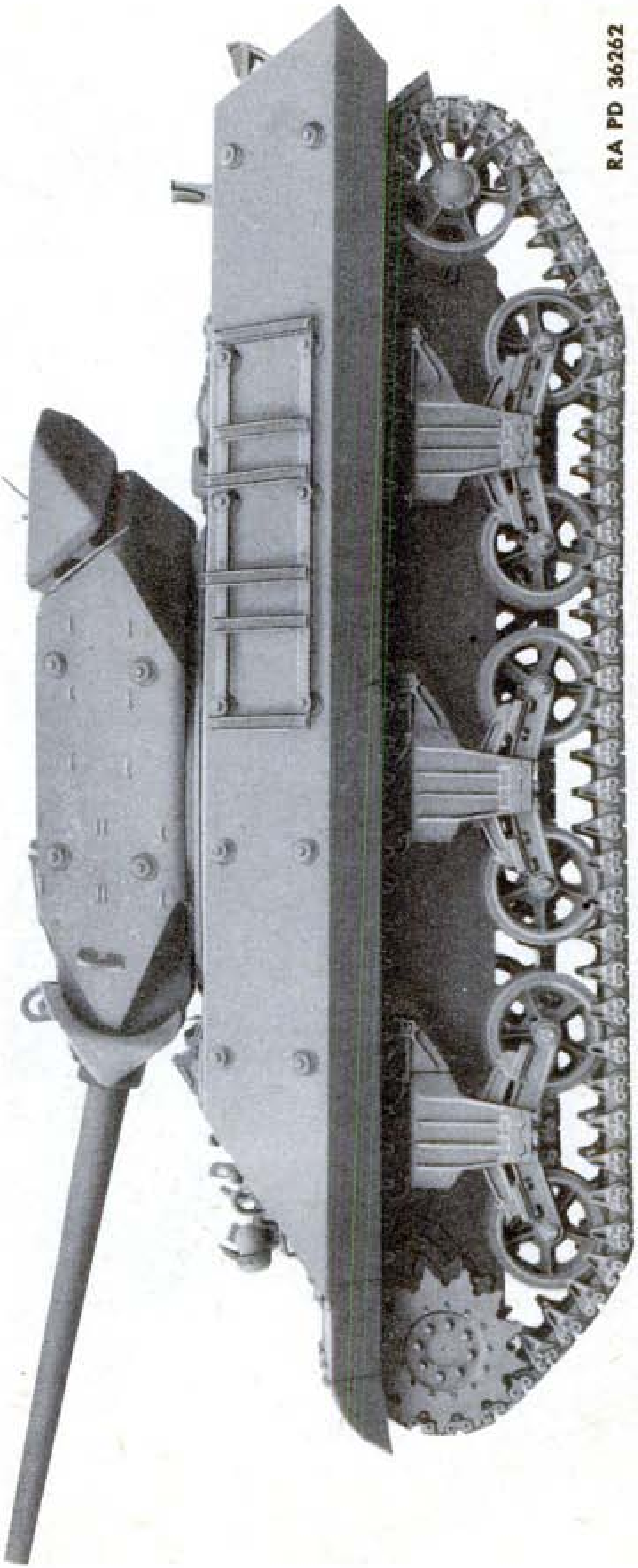

RA PD 36262

Figure 5—3-inch Gun Motor Carriage M10 with Counterweights and Grouser Rack—Left Side View

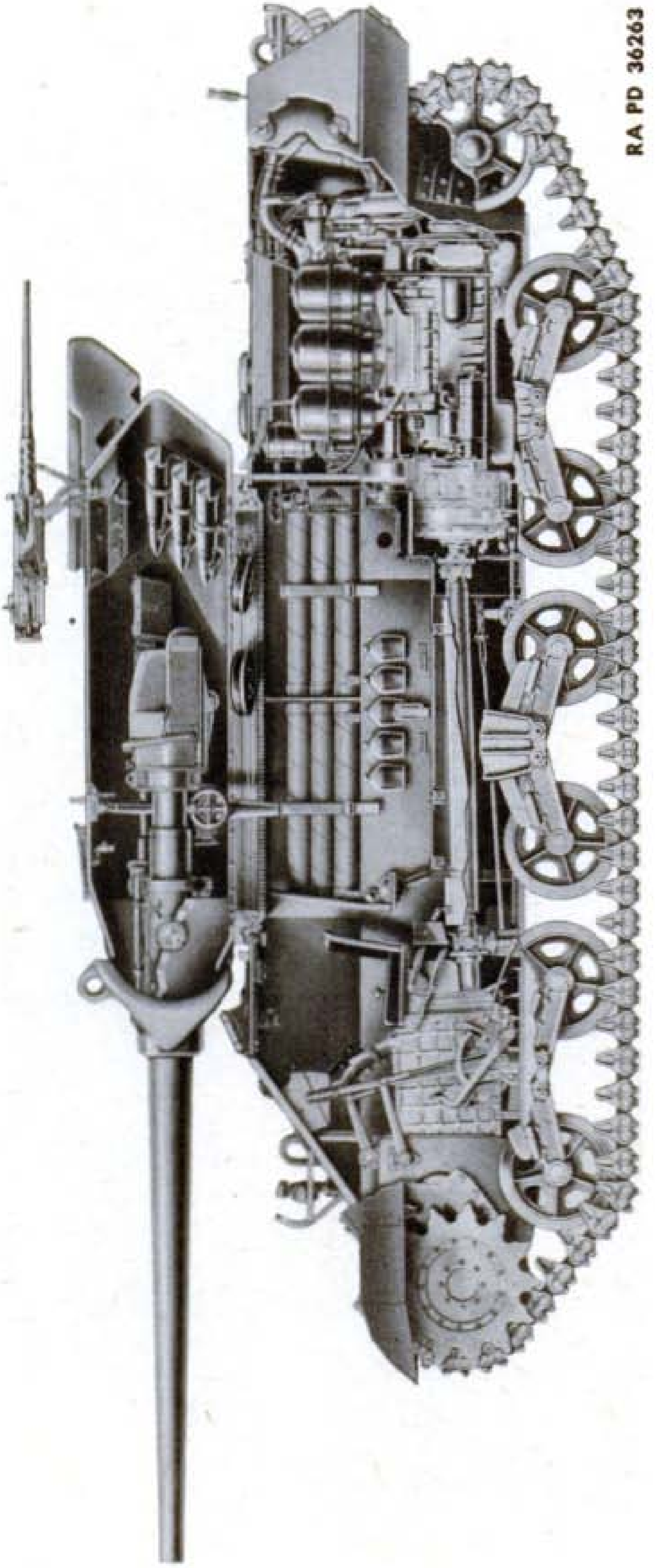

Figure 6—3-Inch Gun Motor Carriage M10—Cutaway View

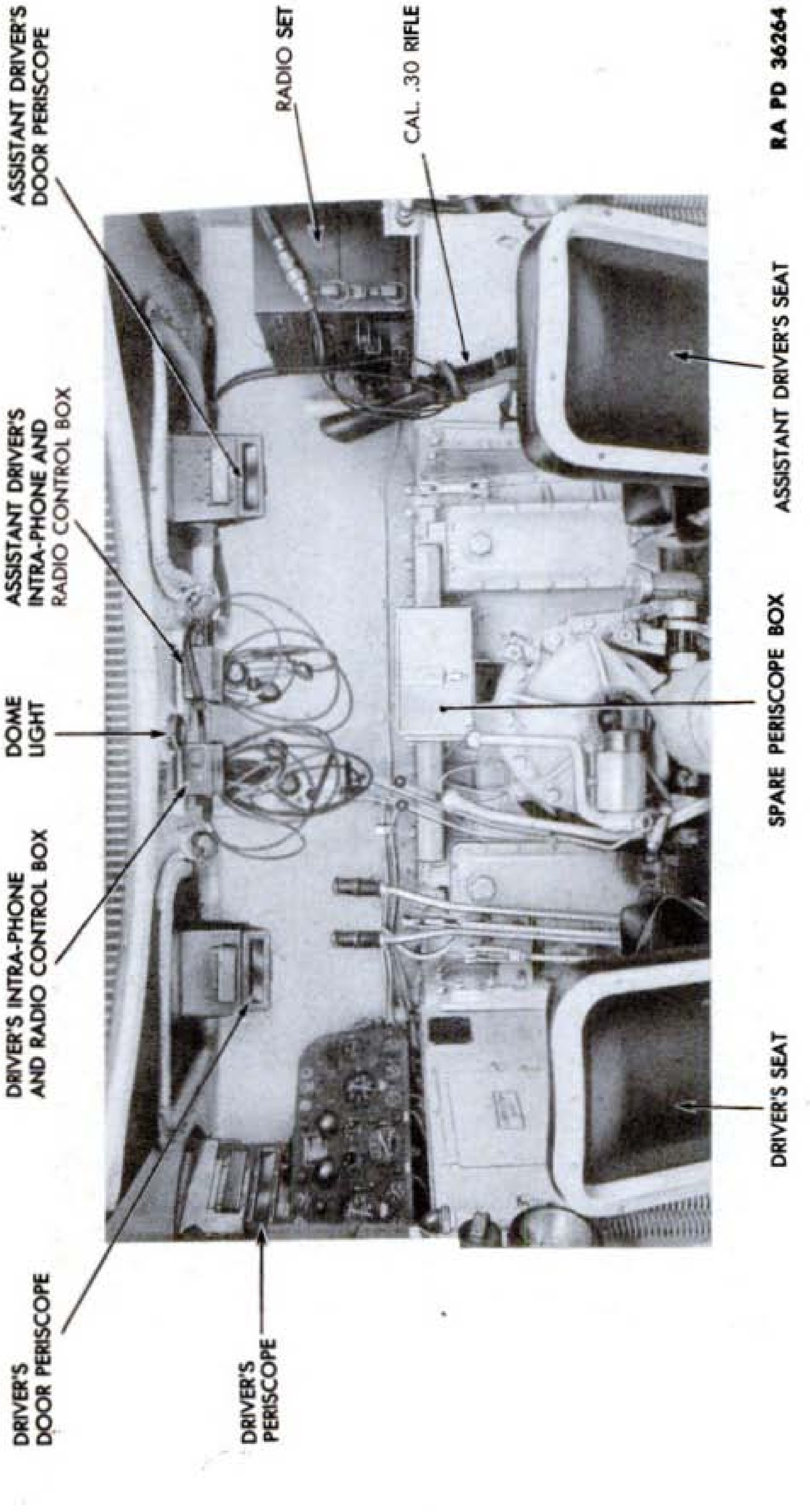

RA PD 36264

Figure 7—Driver's Compartment

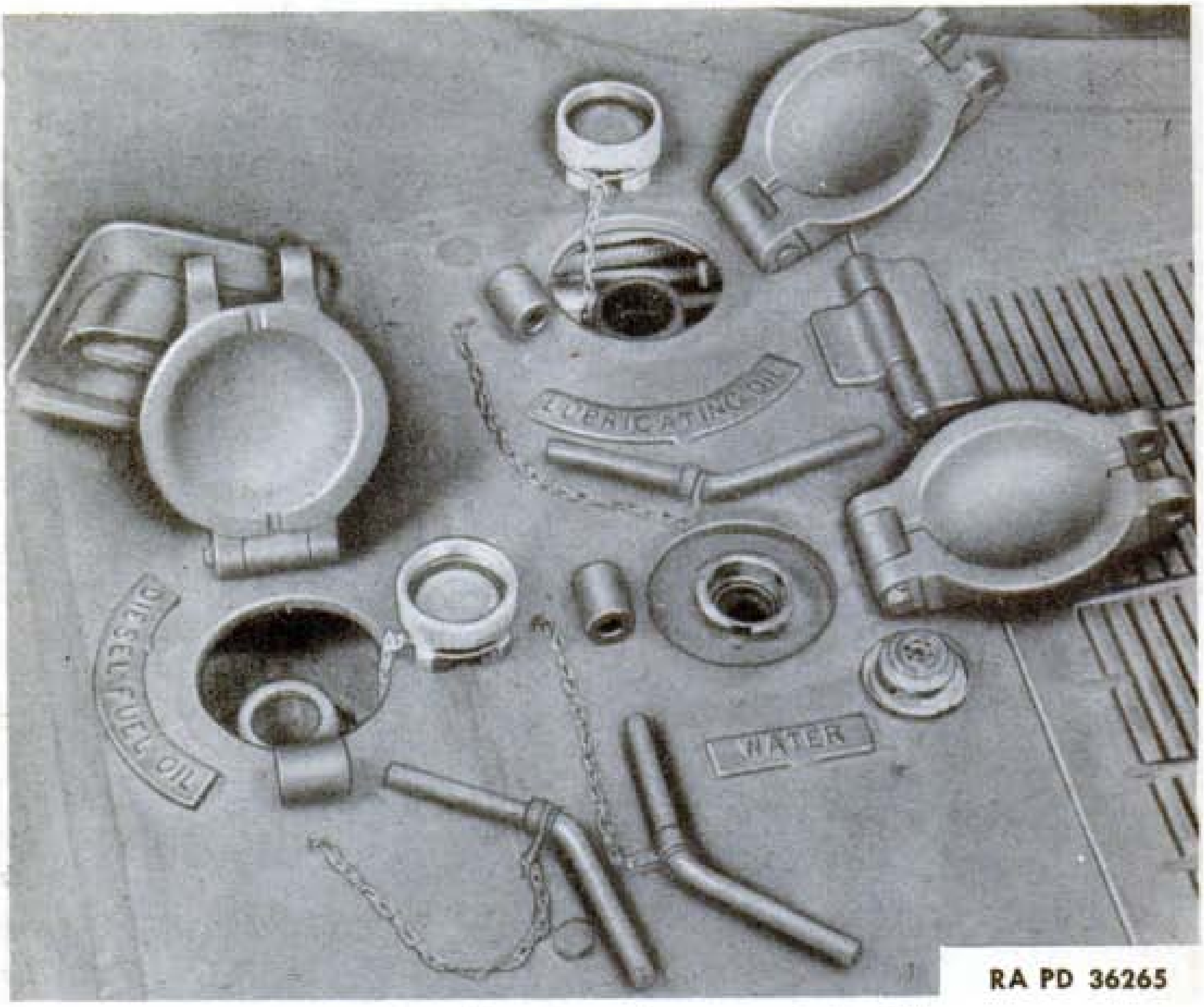

Figure 8—Filler Openings on Left Side

These changes include the following:

(1) Changes in clutch assembly include a heavier clutch pressure spring and semimetallic facings. A clutch equalizer was also added (fig. 81).

(2) Track support rollers attached to the rear instead of above bogie suspension brackets (fig. 133).

(3) Grouser racks are now on sides of hull instead of on turret (fig. 5).

(4) Turret counterweights were added (fig. 5).

(5) Single, instead of double, throttle control is now used (fig. 47). This was covered in Field Service Modification Work Order G130-W2.

(6) Parking brake has been changed from transmission type to steering lever type (fig. 13).

(7) Turret locks were changed from handwheel to two lever-type locks and relocated on left side of turret, one on each side of loader's seat (figs. 184 and 185).

(8) Gun firing circuit pedestal was changed from single jack (fig. 179) to three-pronged plug-and-socket type. This is covered in Field Service Modification Work Order G130-W10.

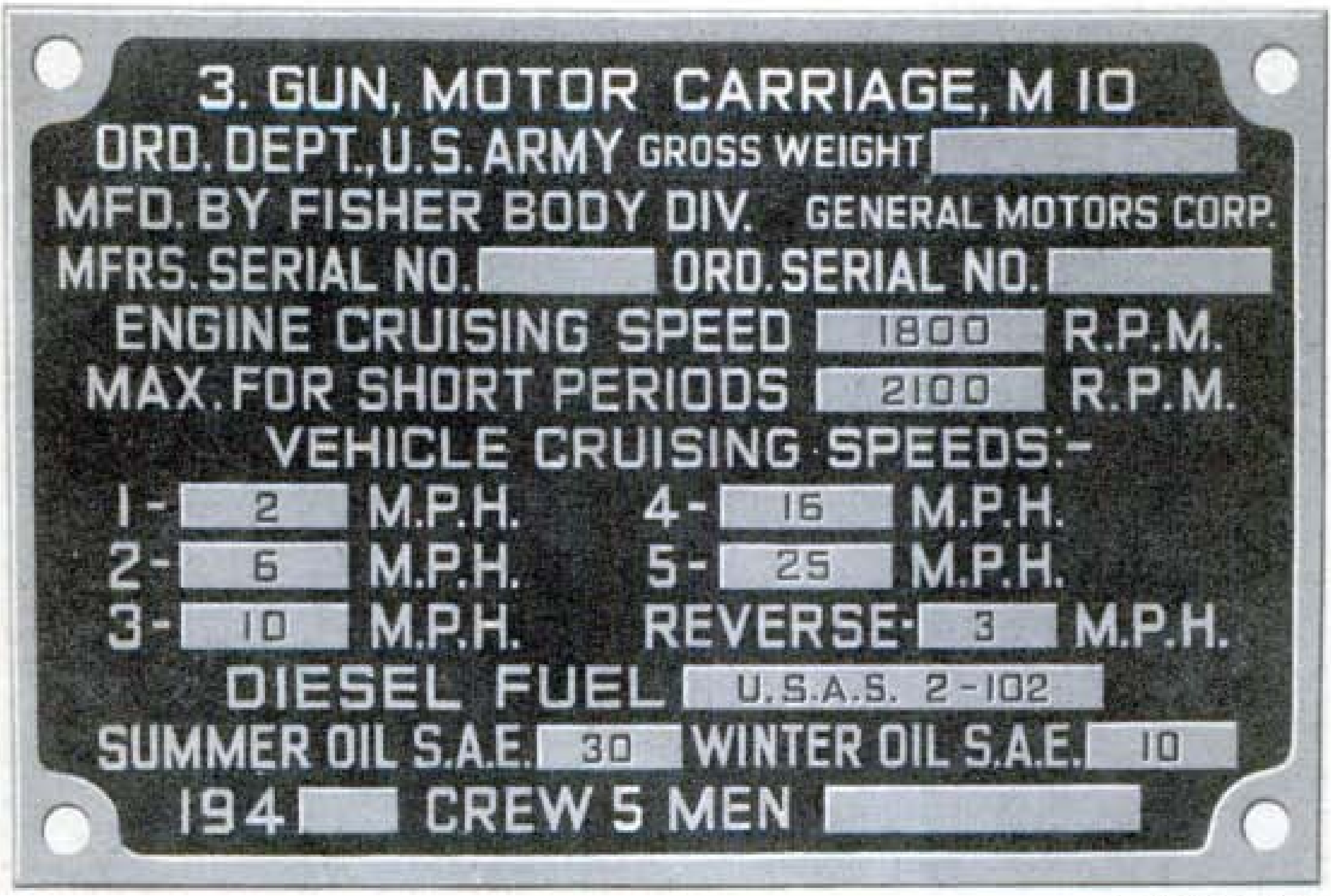

3. GUN, MOTOR CARRIAGE, M 10
ORD. DEPT., U.S. ARMY GROSS WEIGHT
MFD. BY FISHER BODY DIV. GENERAL MOTORS CORP.
MFRS. SERIAL NO. ORD. SERIAL NO.
ENGINE CRUISING SPEED 1800 R.P.M.
MAX. FOR SHORT PERIODS 2100 R.P.M.
VEHICLE CRUISING SPEEDS:-
1- 2 M.P.H. 4- 16 M.P.H.
2- 6 M.P.H. 5- 25 M.P.H.
3- 10 M.P.H. REVERSE- 3 M.P.H.
DIESEL FUEL U.S.A.S. 2-102
SUMMER OIL S.A.E. 30 WINTER OIL S.A.E. 10
194 CREW 5 MEN

RA PD 36266

Figure 9—Vehicle Serial Number Plate

(9) Hooks have been provided for drivers' doors to lock them in open position (fig. 22). This was covered in Field Service Modification Work Order G130-W7.

(10) Steps were added to outside at front for ease in entering or leaving vehicle.

(11) A safety locking arm has been installed on engine compartment splash panel (fig. 140).

(12) Lubrication oil tank dip sticks were provided for manually checking the oil level in the tanks.

4. TABULATED DATA.

a. Vehicle Specifications.

Length, over-all	20 ft 2 in.
Width, over-all	10 ft
Height, over-all	8 ft 1½ in.
Shipping weight (approximate)	62,500 lb
Weight, fully equipped (with counterweights, pioneer equipment, water, oil, fuel, ammunition and crew) (approximate)	66,000 lb
Track	Rubber
Track size, width and length	16⁹⁄₁₆ in. x 39 ft 5½ in.
Tread (center to center)	83 in.
Track shoe width (tread)	12¹⁄₁₆ in.
Track pitch	6 in.

Links, per track	79
Ground contact	3,346 sq in.
Ground clearance, vehicle	18 in.
Pintle height	1 ft 4 in.
Crew	5
Seats	5

b. Performance.

Maximum width of ditch vehicle will cross	7 ft 5 in.
Maximum vertical obstacle, such as wall, that vehicle will climb over:	
Rubber tracks, without grousers	18 in.
Rubber tracks, with grousers	36 in.
Maximum fording depth (at slowest speed)	40 in.
Approach angle	30°
Departure angle	30°
Minimum turning radius	26 ft in 1st gear 50 ft in 5th gear
Allowable list	25°
Towing facilities (front)	2 towing shackles
Towing facilities (rear)	2 towing shackles
Maximum grade-ascending ability (with grousers)	1 pintle 30°
Maximum grade-ascending ability (without grousers)	27°
Maximum grade-descending ability (approximate)	30°
Maximum recommended sustained speed (on hard road)	25 mph
Maximum speed, short periods (on hard road)	30 mph
Maximum allowable engine speed	2,100 rpm
Engine governed idling speed	400-500 rpm
Recommended idling speed during halt	800 rpm
Cruising range (at 18 mph)	140 miles

c. Capacities: Fuel, Lubricating Oil and Water (U. S. Standard Measures).

Fuel oil (2 upper tanks, each 69 gal) (2 lower tanks, each 14½ gal) total	167 gal
Grade of fuel oil	No. 1
Cetane rating of fuel oil	50
Lubricating oil, engine lubricating system (including tanks—each engine 32 qt) total	64 qt
Lubricating oil, lubricating oil tanks (2 tanks, each 24 qt) total	48 qt
Lubricating oil, power train unit (transmission, one-piece differential and final drives)	38 gal
Lubricating oil, second type AC air cleaners (each 3½ qt) total	21 qt

Lubricating oil, Donaldson air cleaners (each 2½ qt) total	15 qt
Lubricating oil, transfer gear unit	2½ qt
Coolant, cooling system (15 gal each engine, including tanks and radiators)	30 gal

d. Communications System.

Radio type SCR-610 (1 every two vehicles) range	3 miles
Telephone, intravehicle, RC99	2 way
Flags, signal (1 red, 1 orange, 1 green) total	3
Flagstaffs	3

e. Armament.

1 gun, 3 in., M7
1 gun, machine, cal. .50, M2 HB
5 carbine, cal. .30
1 gun, submachine, Thompson, cal. .45 M1928A1

Section III

DRIVING CONTROLS AND OPERATION

5. INSTRUMENT PANEL.

a. The instrument panel is mounted on the left sponson forward of the driver's seat. The gages and controls grouped on the left side of the panel are for the left engine, and those on the right side of the panel are for the right engine.

(1) OUTLET SOCKETS. These are used for plugging in an inspection light and other electrical accessories.

(2) STARTER BUTTONS. The starter button on left side of panel is pressed to start the left engine. The button on right side is used to start the right engine. There are two auxiliary starter buttons on the filter panel, in engine compartment, for convenience when working on the engines.

(3) EMERGENCY STOP BUTTONS. These are used to stop engines, should they fail to stop when throttle is returned to "NO FUEL" position, or if engines get out of control due to faulty governor or throttle linkage. CAUTION: *Emergency stop buttons must not be used except when engines fail to stop when throttle is returned to "NO FUEL" position.* Should emergency stop fail to stop engine, the engine can be stalled by shifting transmission into 5th gear and releasing clutch pedal.

(4) AIR HEATER SWITCHES. These are used to turn the ignition for the engine air heaters on and off. Switches must be turned to "OFF" position unless air heater pumps are being operated (par. 7 c (4)).

(5) AIR HEATER FUEL VALVE. This valve controls fuel supply to air heater pumps. They must be turned off except when an air heater pump is being operated (par. 7 c (3)).

(6) BLACKOUT LIGHT SWITCH. This switch is used to turn the blackout driving light "ON" and "OFF" when it is installed in the left headlight socket (par. 6 m and fig. 20).

(7) LIGHT SWITCH SAFETY LOCK. It is located on the side of driving light switch to prevent light switch from being accidentally pulled

beyond the blackout position. Safety button must be pushed into pull switch beyond blackout position (fig. 11).

(8) DRIVING LIGHT SWITCH. This switch controls the service and blackout lights when they are in position on front of vehicle (par. 6 **l** and **m**). The lighting chart (fig. 12) provides complete information on switch positions and lights.

(9) PANEL LIGHT SWITCH. This switch is used to turn panel lights on and off, and to control their intensity. Turning knob clockwise turns lights on and increases their intensity.

(10) AIR HEATER INDICATOR LIGHTS. When air heater switches are "ON," indicator lights show red.

(11) AIR HEATER FUEL PUMPS. These pumps are hand-operated to spray fuel out of engine air heater nozzles (par. 7 **c** (5)).

(12) CIRCUIT BREAKER RESET BUTTONS. For resetting circuit breakers which are used instead of fuses to protect electrical wiring and units. Circuit breaker button snaps out, when circuit is overloaded. To reset circuit breaker, press button in and release immediately. Holding button down may cause serious damage. If button snaps out again, do not attempt to reset until trouble has been corrected. A plate identifying the circuit breaker buttons by function is located on the panel just below and to the right of the buttons.

(13) TANK GAGE CONTROL SWITCH (fig. 10). Connects tank gage on instrument panel with level gages in fuel and oil tanks. Turning control switch to either L or R under "FUEL" shows level of fuel in left or right upper fuel tank. Turning switch to either L or R under "OIL" shows level of oil in left or right engine lubricating oil tank. When operating vehicle, the control switch must be turned to the proper position to correspond with setting of fuel tank selector valve, so gage will continually show the quantity in tank supplying the fuel.

(14) TACHOMETERS. Hand indicates engine speeds in revolutions per minute. Figures record total engine revolutions in thousands.

(15) VOLTMETER. Indicates state of charge in the batteries. Reading of 24 to 26 volts, when engines are not running, indicates the batteries are fully charged.

(16) AMMETER. Indicates the rate of current flow into or out of the batteries. When batteries are fully charged and all electrical units turned off, the ammeter will show a very low charging rate with engines running. Maximum charging rate is 100 amperes, 50 amperes per generator, when both engines are running.

(17) CLOCK. Eight-day hand-wound clock with sweep second hand.

(18) CLOCK SET AND WIND KNOB. Turn clockwise to wind, pull out and turn to set.

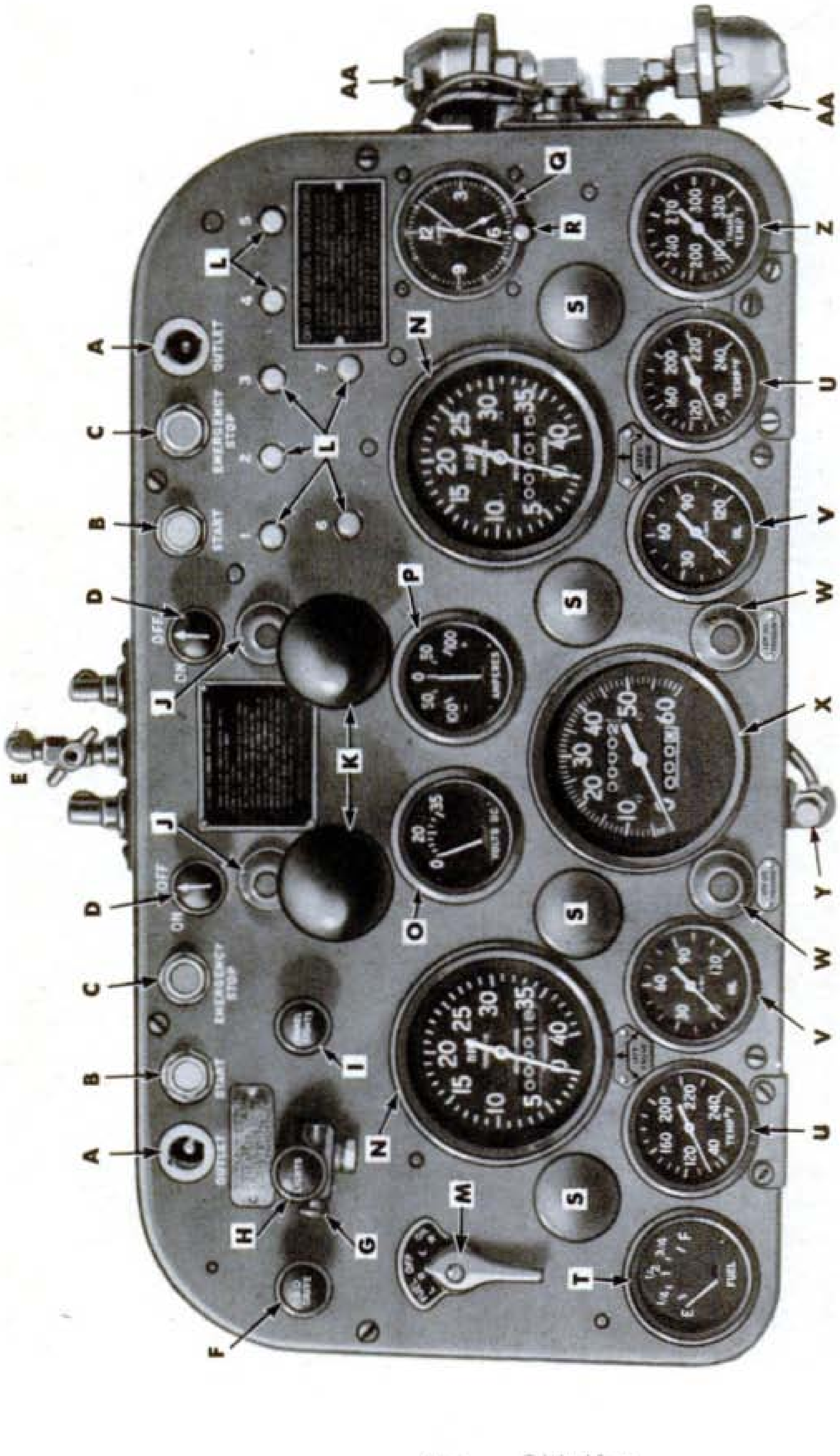

RA PD 36268

Figure 10—Instrument Panel

A—OUTLET SOCKETS
B—STARTER BUTTONS
C—EMERGENCY STOP BUTTONS
D—AIR HEATER SWITCHES
E—AIR HEATER FUEL VALVE
F—BLACKOUT LIGHT SWITCH
G—LIGHT SWITCH SAFETY LOCK
H—DRIVING LIGHT SWITCH
I—PANEL LIGHT SWITCH
J—AIR HEATER INDICATOR LIGHTS
K—AIR HEATER FUEL PUMPS
L—CIRCUIT BREAKER RESET BUTTONS
M—TANK GAGE CONTROL SWITCH
N—TACHOMETERS
O—VOLTMETER
P—AMMETER
Q—CLOCK
R—CLOCK SET AND WIND KNOB
S—INSTRUMENT PANEL LIGHTS
T—FUEL AND OIL GAGE
U—ENGINE TEMPERATURE GAGES
V—ENGINE OIL PRESSURE GAGES
W—LOW OIL PRESSURE WARNING LIGHTS
X—SPEEDOMETER
Y—SPEEDOMETER TRIP MILEAGE RESET KNOB
Z—TRANSMISSION OIL TEMPERATURE GAGE
AA—LOW OIL PRESSURE WARNING LIGHT SWITCHES

RA PD 36268B

Legend for Figure 10—Instrument Panel

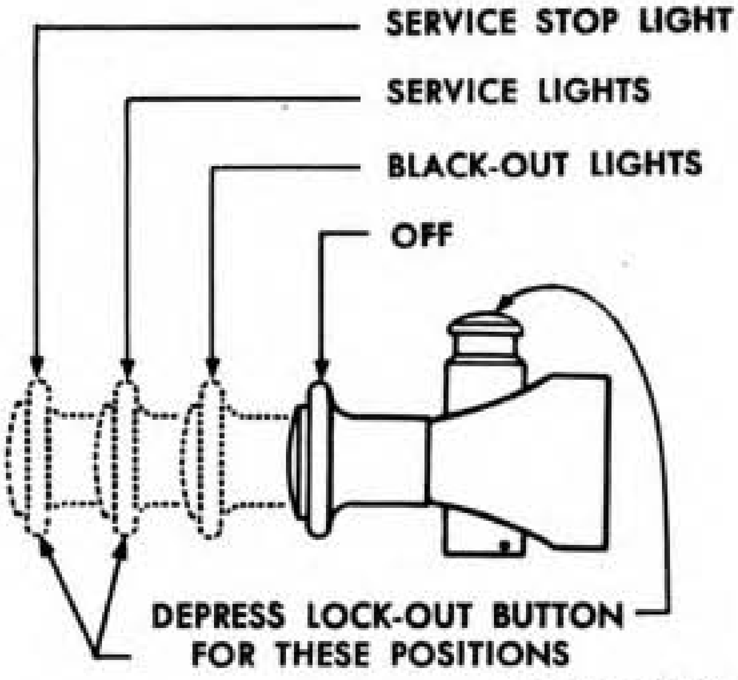

RA PD 36352

Figure 11—Driving Light Switch Positions

LIGHTING CHART

Driving Light Switch Position	Lights Operating	Location
1. Pull knob to BLACKOUT POSITION	Blackout marker	Top of R. and L. headlight
	Blackout taillights	Lower Section R. and L. taillights
	Blackout stoplight	Upper Section R. taillight
2. Push button and pull knob to SERVICE POSITION	Service headlights	R. and L. headlight
	Service taillight	Upper Section L. taillight
	Service stoplight	Upper Section L. taillight
3. Pull knob to STOPLIGHT POSITION	Service stoplight	Upper Section L. taillight
4. Push knob to OFF POSITION	None	None
5. Pull knob to 1st position and pull blackout driving light switch knob to BLACKOUT DRIVING POSITION	Blackout driving	Blackout driving light
	Blackout taillights	Lower Section R. and L. taillights
	Blackout stoplight	Upper Section R. taillight

RA PD 36271

Figure 12—Lighting Chart

(19) Instrument Panel Lights. Four lights behind covers illuminate the instruments on the panel.

(20) Fuel and Oil Gage. Indicates level in fuel or oil tanks depending upon position of control switch.

(21) Engine Temperature Gages. Each gage indicates tem-

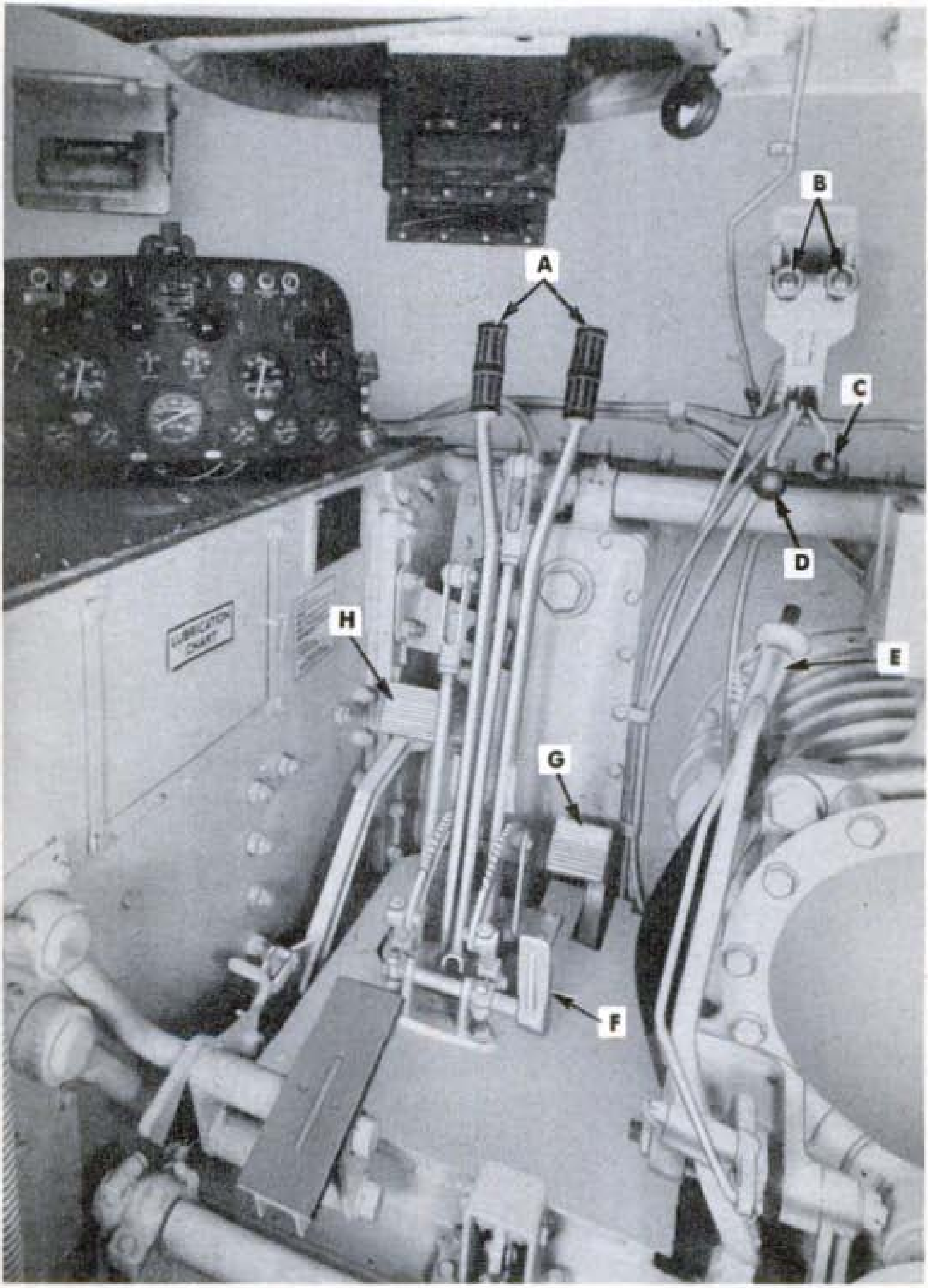

A—STEERING LEVERS
B—CLUTCH LOCKOUTS
C—THROTTLE LOCKING LEVER
D—THROTTLE
E—GEARSHIFT LEVER
F—BRAKE LOCKING PEDAL
G—ACCELERATOR PEDAL
H—CLUTCH PEDAL

RA PD 36274

Figure 13—Driver's Controls (Seats Removed)

perature of liquid in the cooling system of one engine. Gages must read 50°F before driving the vehicle. Maximum safe operating temperature is 225°F.

(22) ENGINE OIL PRESSURE GAGES. Each gage indicates the oil pressure in the lubrication system of one engine. Gages should read 4 to 5 pounds within 30 seconds after starting engines and 35 to 50 pounds from 1,500 to 2,100 revolutions per minute.

(23) LOW OIL PRESSURE WARNING LIGHTS. Red indicator lights warn driver of low engine oil pressure. Lights turn on when throttles are moved out of "NO FUEL" position and go out when oil pressure reaches 12 to 14 pounds. If a light flashes on at engine speeds above 1,000 revolutions per minute, stop engine immediately and investigate cause of low oil pressure.

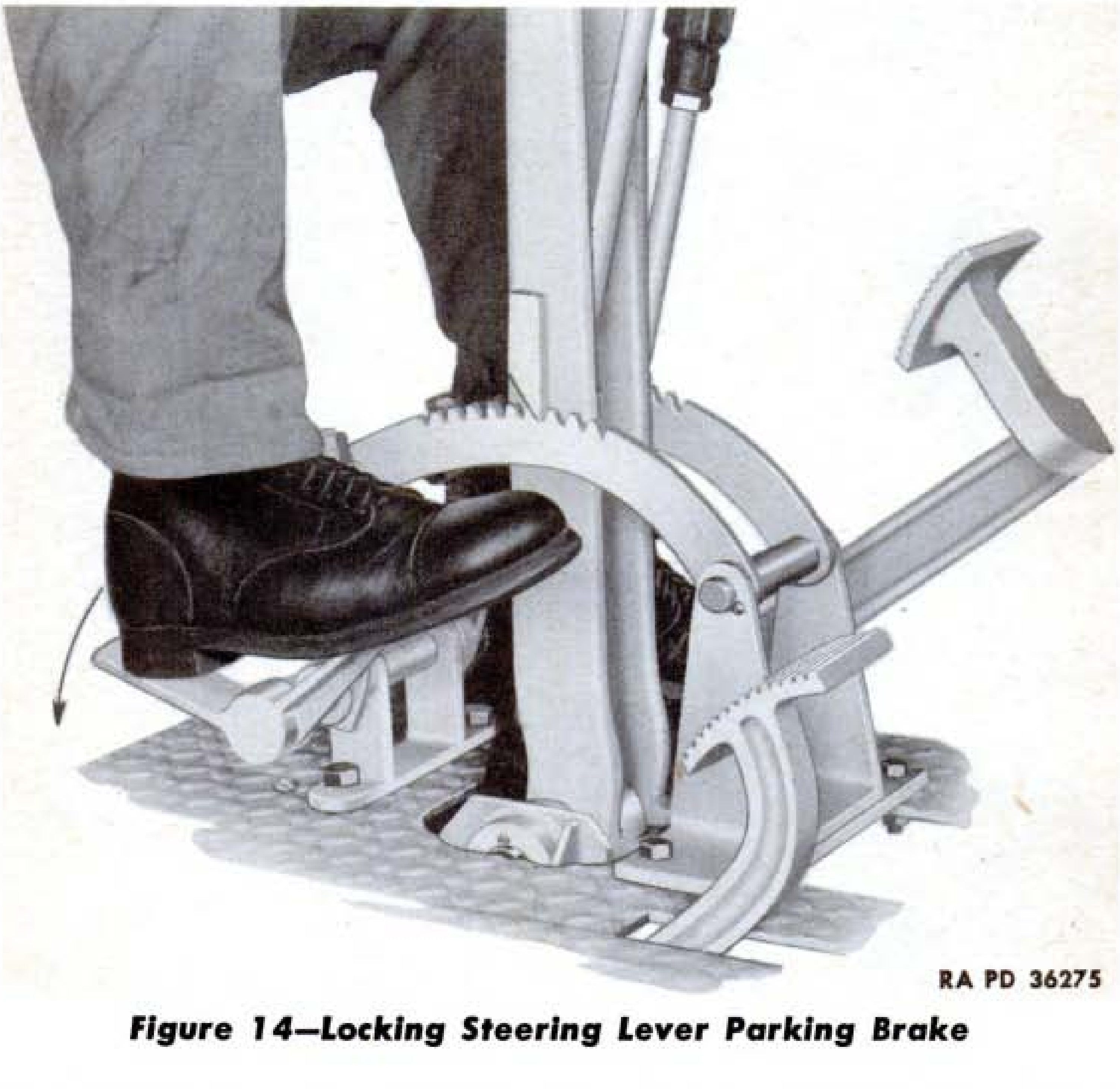
RA PD 36275

Figure 14—Locking Steering Lever Parking Brake

(24) SPEEDOMETER. Indicates the vehicle speed in miles per hour. Upper odometer registers total mileage. Lower odometer registers trip mileage.

(25) Speedometer Trip Mileage Reset Knob. Push in and turn to reset trip odometer, then release.

(26) Transmission Oil Temperature Gage. Indicates temperature of the oil which lubricates the transmission, differential and final drives. Reading should not exceed 300°F.

(27) Low Oil Pressure Warning Light Switches. These switches control low oil pressure warning lights. The switches close the circuits when the oil pressure is less than 11 pounds per square inch, and turn on the red warning lights which remain lighted until the pressure increases to more than 11 pounds per square inch. At idling speed, with engine warm, minimum oil pressure is 4 pounds at 400 revolutions per minute. Normal operating pressure is 30 to 40 pounds although in some engines it may exceed 40 pounds which is permissible. Minimum operating oil pressure is 35 pounds at 2,100 revolutions per minute. To prevent warning lights from remaining lighted when the engines are not running, a microswitch in the throttle lever bracket (par. 217) is open when throttle lever is in "NO FUEL" position.

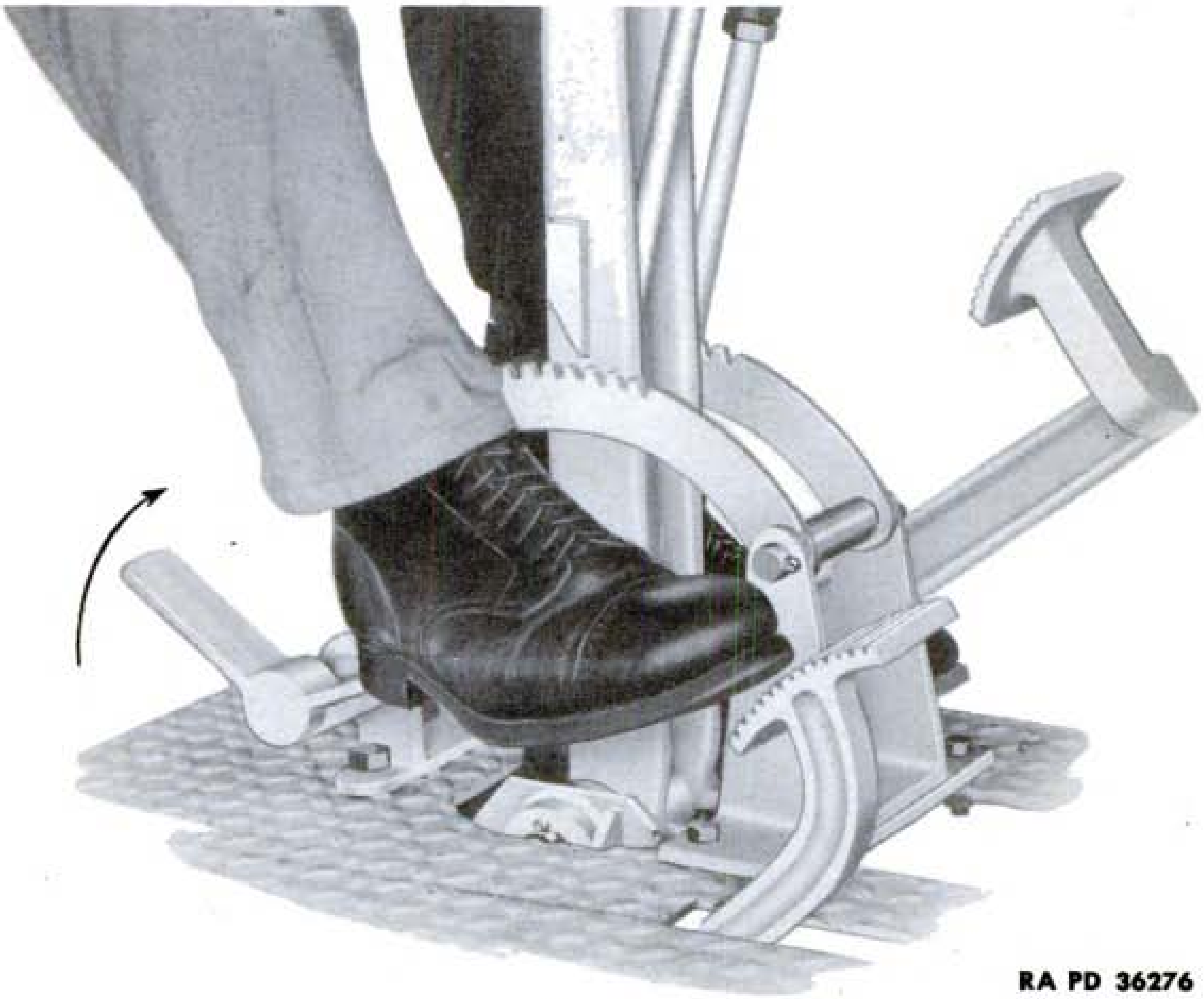

RA PD 36276

Figure 15—Releasing Steering Lever Parking Brake

6. CONTROLS.

a. Steering Levers. The two steering levers are mounted side by side, directly in front of driver's seat (fig. 13). The vehicle is steered by pulling on the right lever to turn to the right or the left lever to turn to the left. Pulling back on either lever slows down the track on that side and speeds up the track on opposite side, causing the vehicle to turn.

b. Service Brakes. The same brakes used for steering the vehicle are used to stop it. Pulling back evenly on both steering levers at the same time applies the brakes, and slows down the vehicle in proportion to the effort applied.

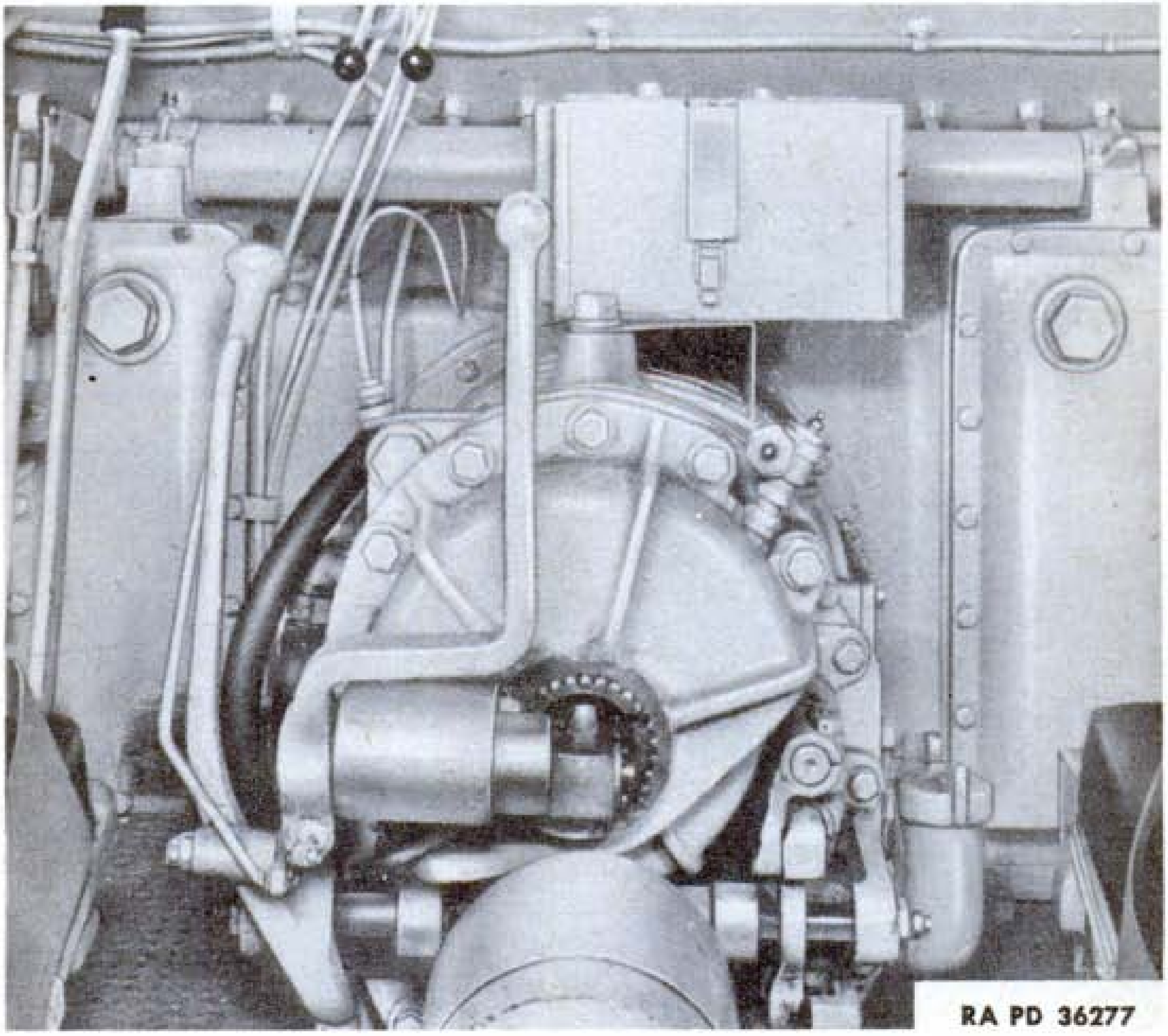

Figure 16—Transmission Parking Brake

c. Parking Brakes.

(1) STEERING LEVER TYPE. The steering brakes on late model vehicles also serve as parking brakes which are applied to hold the vehicle when it is not in motion. To apply parking brakes, press with right heel on rear pad of lock pedal on floor at right of steering levers (fig. 14), and pull back on both steering levers. To release parking

brakes, pull back on both levers and press down on front pad pedal (fig. 15). This moves the quadrants out of engagement with the pawls. CAUTION: *Parking brakes must be released before driving vehicle.*

(2) TRANSMISSION PARKING BRAKE. On earlier model vehicles the parking brake (fig. 16) is mounted on rear of transmission, and operated by a lever to right of gearshift lever. To apply parking brake, pull back on lever. To release parking brake, push lever forward. CAUTION: *Transmission parking brake must never be applied when vehicle is in motion.*

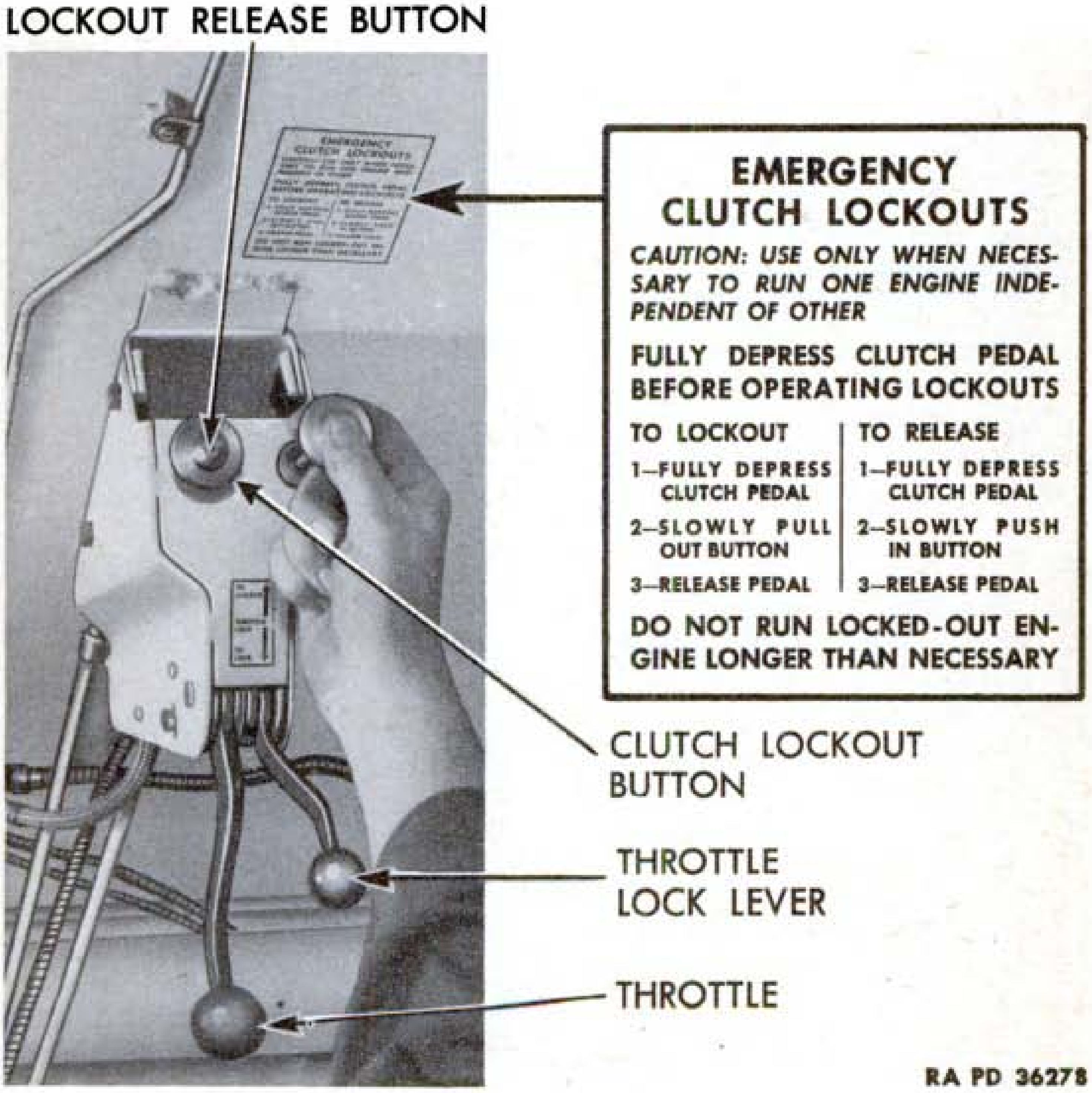

EMERGENCY CLUTCH LOCKOUTS

CAUTION: USE ONLY WHEN NECESSARY TO RUN ONE ENGINE INDEPENDENT OF OTHER

FULLY DEPRESS CLUTCH PEDAL BEFORE OPERATING LOCKOUTS

TO LOCKOUT	TO RELEASE
1—FULLY DEPRESS CLUTCH PEDAL	1—FULLY DEPRESS CLUTCH PEDAL
2—SLOWLY PULL OUT BUTTON	2—SLOWLY PUSH IN BUTTON
3—RELEASE PEDAL	3—RELEASE PEDAL

DO NOT RUN LOCKED-OUT ENGINE LONGER THAN NECESSARY

RA PD 36278

Figure 17—Clutch Lockouts

d. Clutch Pedal. Located to left of steering levers (fig. 13). Depressing or pushing the clutch pedal down disengages both clutches, and disconnects the two engines from the driving mechanism and from each other. Releasing the pedal and letting it come up engages the clutches.

e. Clutch Lockouts. The two clutch lockout buttons are mounted in the throttle bracket (fig. 17) and are used to lock the two clutches out of engagement. This permits starting one engine at a time without holding clutch pedal down or, in an emergency, using one engine to operate the vehicle. To lock out the clutches, hold clutch pedal down, pull out clutch lockout and release clutch pedal. To release the clutch lockouts, hold clutch pedal down, push in on latch button in center of clutch lockout, and push clutch lockout all the way in.

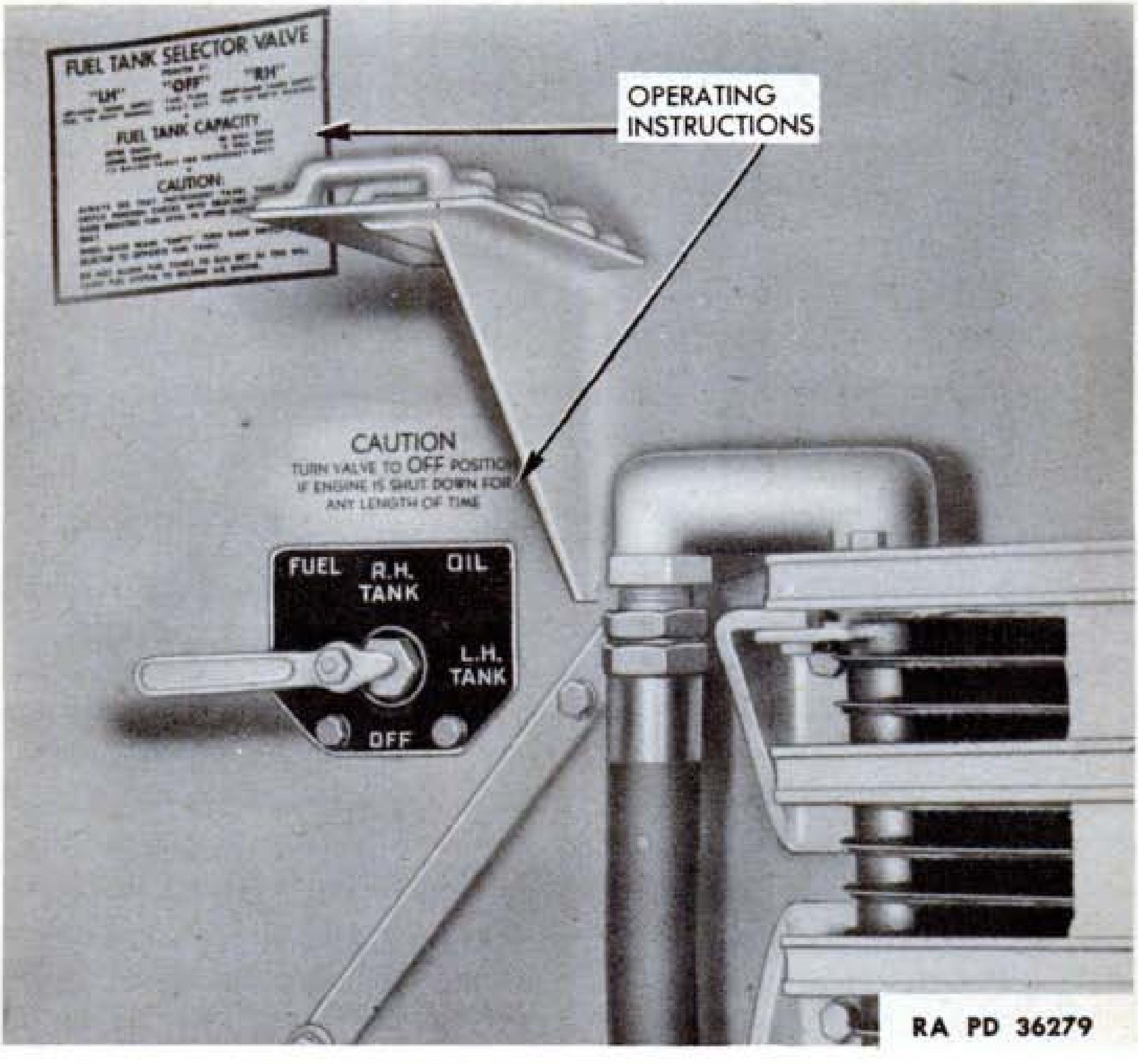

Figure 18—Fuel Tank Selector Valve

CAUTION: *Transmission must be in neutral while operating clutch lockouts. Do not run engines with clutches locked out any longer than necessary.*

f. Accelerator. The accelerator is located on floor to right and forward of steering lever (fig. 13).

g. Throttle. The throttle is mounted on a bracket attached to front slope of vehicle (fig. 13). Pushing the throttle forward increases speed of engines, pulling it all the way back puts it in the "NO

DRIVING CONTROLS AND OPERATION

FUEL" position. Throttle must be placed in "IDLING" position to start engines and maintain proper idling speed. To set throttle in idling speed, push it half-way forward, then slowly pull it back until idling position notch is felt. The Diesel engines are stopped by moving the throttle into "NO FUEL" position, which shuts off the fuel supply to the injectors, and not by turning off an ignition switch, which is the way a gasoline engine is stopped. Earlier model vehicles were equipped with two throttles and dual throttle controls. When these vehicles were modified to use a single throttle control, the dual throttles were connected so as to operate as a single throttle.

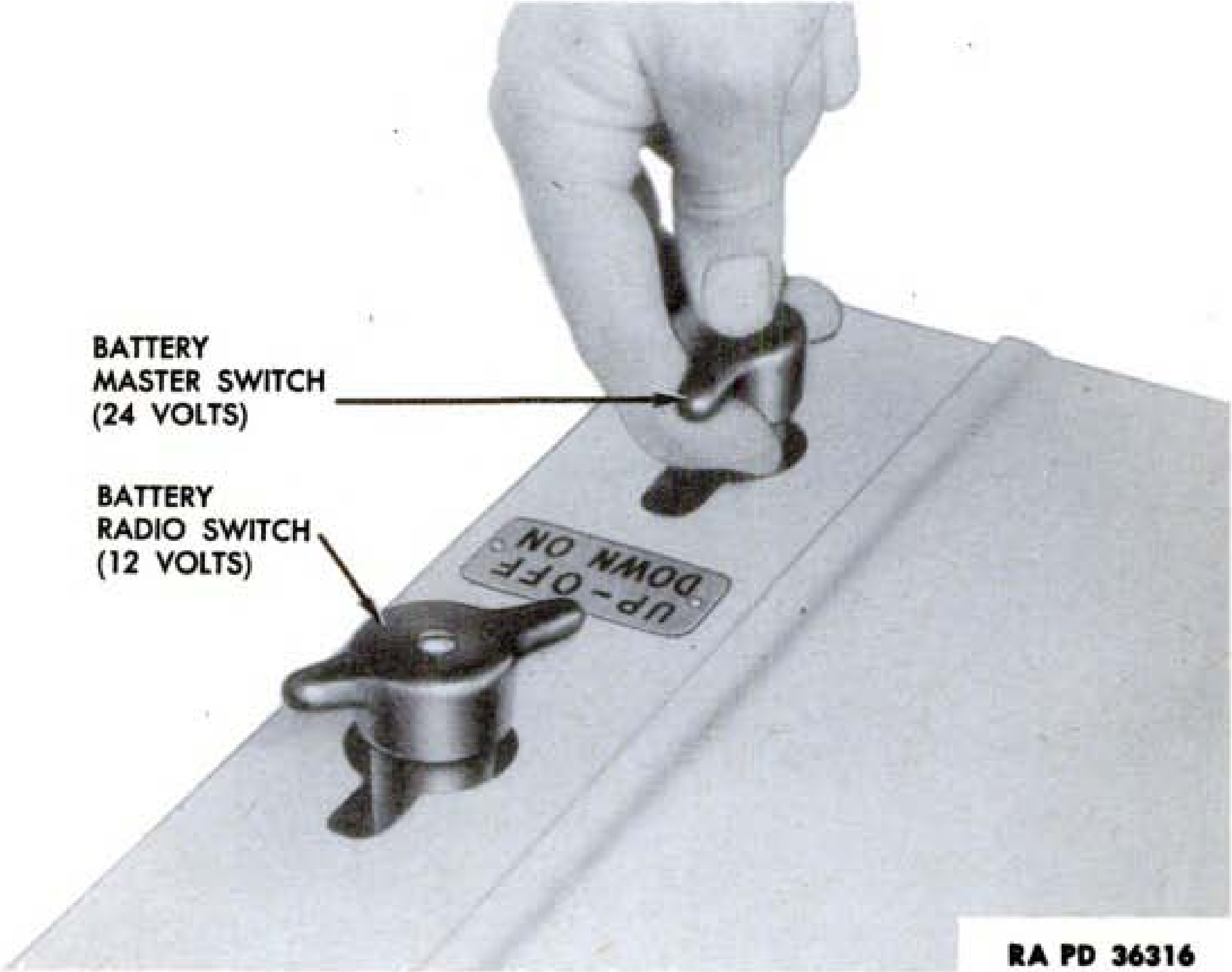

Figure 19—Battery Switches

h. Throttle Lock. The upper lever on the throttle bracket (fig. 13) is used to operate a friction lock which holds the throttle in desired position. Pulling down on the locking lever locks the throttle, pulling up unlocks it.

i. Gearshift Lever. Located on the left rear of the transmission case and used to shift gears (fig. 13). For gearshift lever positions, refer to diagram on rear of transmission.

j. Fuel Tank Selector Valve. This valve is located at the right on fighting compartment side of the bulkhead (fig. 18) and is operated to select the set of tanks from which fuel is to be used. During operation, when fuel gage indicates that one upper fuel tank is empty, the fuel tank selector valve must be turned to the other set of fuel tanks. The tank gage control switch must be set to correspond with setting of fuel tank selector valve. Always turn fuel tank selector valve to "OFF" position when vehicle is not to be operated.

k. Battery Switches. On late model vehicles, the battery and radio master switches are in the master switch box at front edge of fighting compartment floor. This box also has a receptacle for use when recharging the batteries. The battery master switch is the one nearest the left side of the hull. On earlier models the two battery switches are located on the top of the battery box (fig. 19) with the battery master switch nearest the driver. They are reached through doors on left of the fighting compartment floor. The battery master switch is the 24-volt switch, which controls current to all vehicle units except the radio and inter-communication systems. The radio master switch is the 12-volt switch, which controls the current to the radio and inter-communication system only. The engine air heaters and emergency stop circuits are directly connected to the rear 12-volt battery. To turn switches on: pull switch handle up and turn right

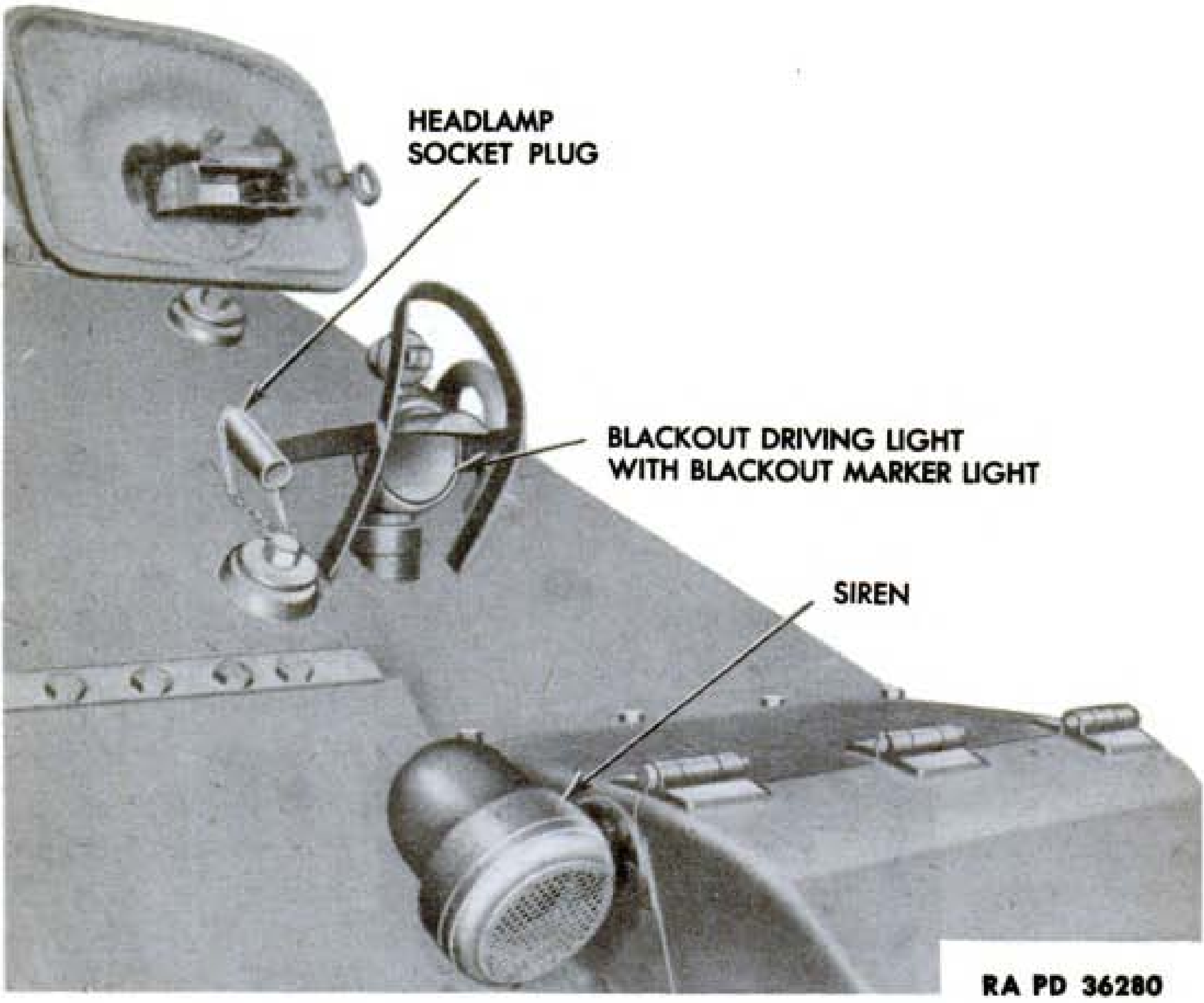

Figure 20—Blackout Driving Light

or left, whichever way it will turn, approximately ⅛ turn and let it drop into extreme low position or "ON" position. To turn switches off: pull switch handle up and turn to right or left as far as possible and let it drop into one of the "OFF" position locking notches. CAUTION: *Never turn battery master switch "OFF" when engines are running as this will burn out the generators.* Always turn battery master switch "OFF" when working on engines or electrical units or when vehicle is not to be operated.

l. Service Headlights. The vehicle is equipped with two service headlights stowed in brackets behind driver's seat. Each headlight consists of a combination sealed beam driving light, and a blackout marker light. Sockets for lights are located on front hull plate above each fender. Protective plugs (fig. 20) are provided to weather-seal sockets, and should be installed in sockets when lights are not in use. Plugs are chained to their stowage receptacles. To install service headlights, pull out knobs under sockets, from inside driver's compartment, and lock in released position by turning each knob while pulled out. Remove socket plugs and place them in their stowage receptacles alongside of sockets. Remove the service headlights from brackets inside the vehicle and insert them in sockets, being sure they are firmly seated. Release knobs inside the vehicle. For operation of lights see figure 12, item 2. To remove service headlights, reverse installation procedure and stow lights in vehicle.

m. Blackout Driving Light. Blackout light is stowed in a bracket back of the assistant driver's seat. To use blackout light, first remove service driving lights from their sockets and stow in brackets back of driver's and assistant driver's seats. Remove service lights by pulling out knob at base of each socket inside driver's compartment, and lock in released position by turning knob. Insert the single blackout driving light in left front light socket, and plug in right socket. Lock the lamp and plug in position (fig. 20) by releasing the knobs. Operation of blackout driving light is shown in figure 12, item 5.

n. Siren Button. The siren button is mounted on a bracket above the clutch pedal, and operated by the driver's left foot. The siren is mounted outside on front slope of vehicle, at the left.

o. Driver's and Assistant Driver's Seats. Seats are mounted on adjustable arms pivoted on lower hull side plates (fig. 21), so they can be raised or lowered. Seats also are adjustable forward and backward. To raise seat, hold up on latch lever under front corner of seat nearest hull side, and seat will raise when body weight is removed. To lower seat, partially remove body weight, hold up on latch lever and force seat down by body weight. To adjust forward or backward, hold up on latch lever under inner front corner of seat while seat is moved into desired position.

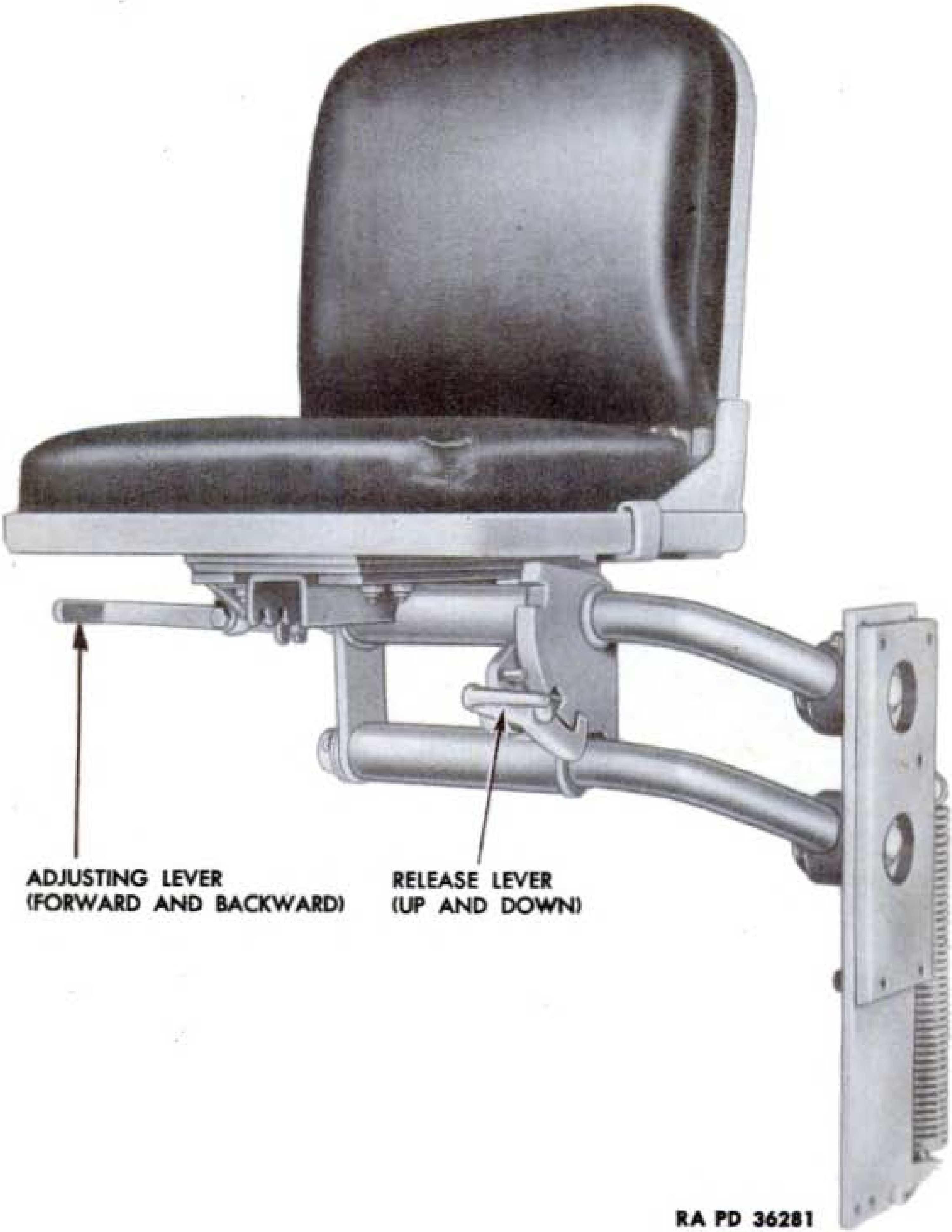

Figure 21—Driver's Seat

p. Escape Hatch. This auxiliary exit in the drivers' compartment floor is directly behind assistant driver's seat. To open hatch, press down on pawl and move locking lever to the left (fig. 141). This action withdraws four locking bolts on hatch plate and allows it to drop to the ground. Hatch plate is reinstalled by lifting it into place with the handles, and resetting the locking lever and pawl. NOTE: *On later models, pawl is inserted through locking lever and is released by pulling up on release ring.*

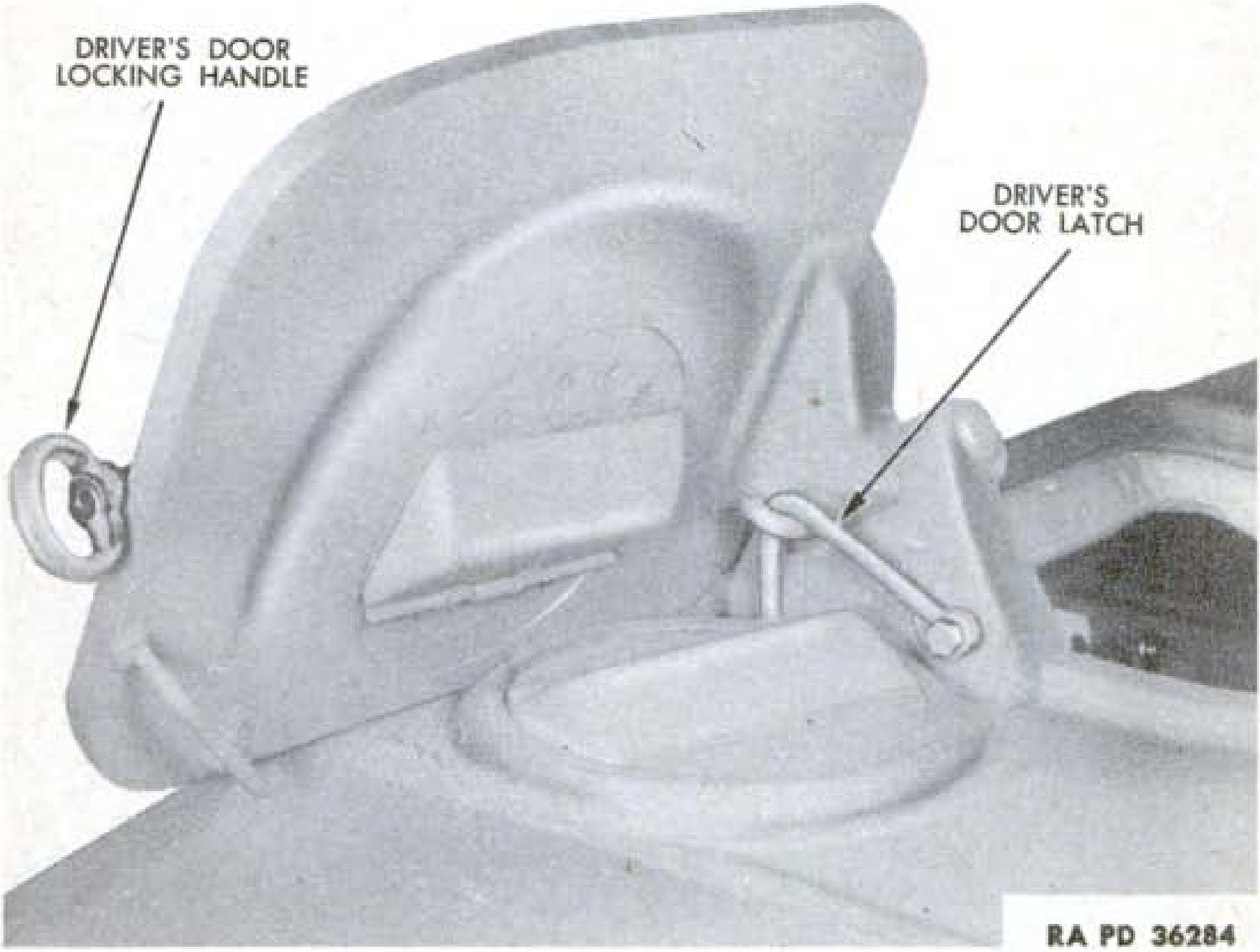

Figure 22—Driver's Door Locked Open

q. Driver's and Assistant Driver's Doors. Driver and assistant driver are protected by heavy doors which cover the openings directly above their seats. When driving vehicle with doors closed, they always must be locked by swinging the latch into the hasp and turning the screw handle up tightly. Always fasten hook to hold doors in open position to prevent accidental closing and possible personal injury (fig. 22). Do not traverse turret when the doors are open. Remove periscopes from doors before driving vehicle with doors open.

7. STARTING THE ENGINES.

a. The driver must be thoroughly familiar with all instruments, gages and controls and must perform before-operation inspection (par. 26) before starting engines or operating the vehicle.

b. Above Freezing Temperature.

(1) Turn fuel tank selector valve (fig. 18) to right or left.

(2) Turn both battery switches on (fig. 19).

(3) Take position in driver's seat.

(4) Turn tank gage control switch (fig. 10) to correct position to indicate level in tank from which fuel is to be used.

(5) Make sure that gearshift lever is in neutral position and that parking brake is on.

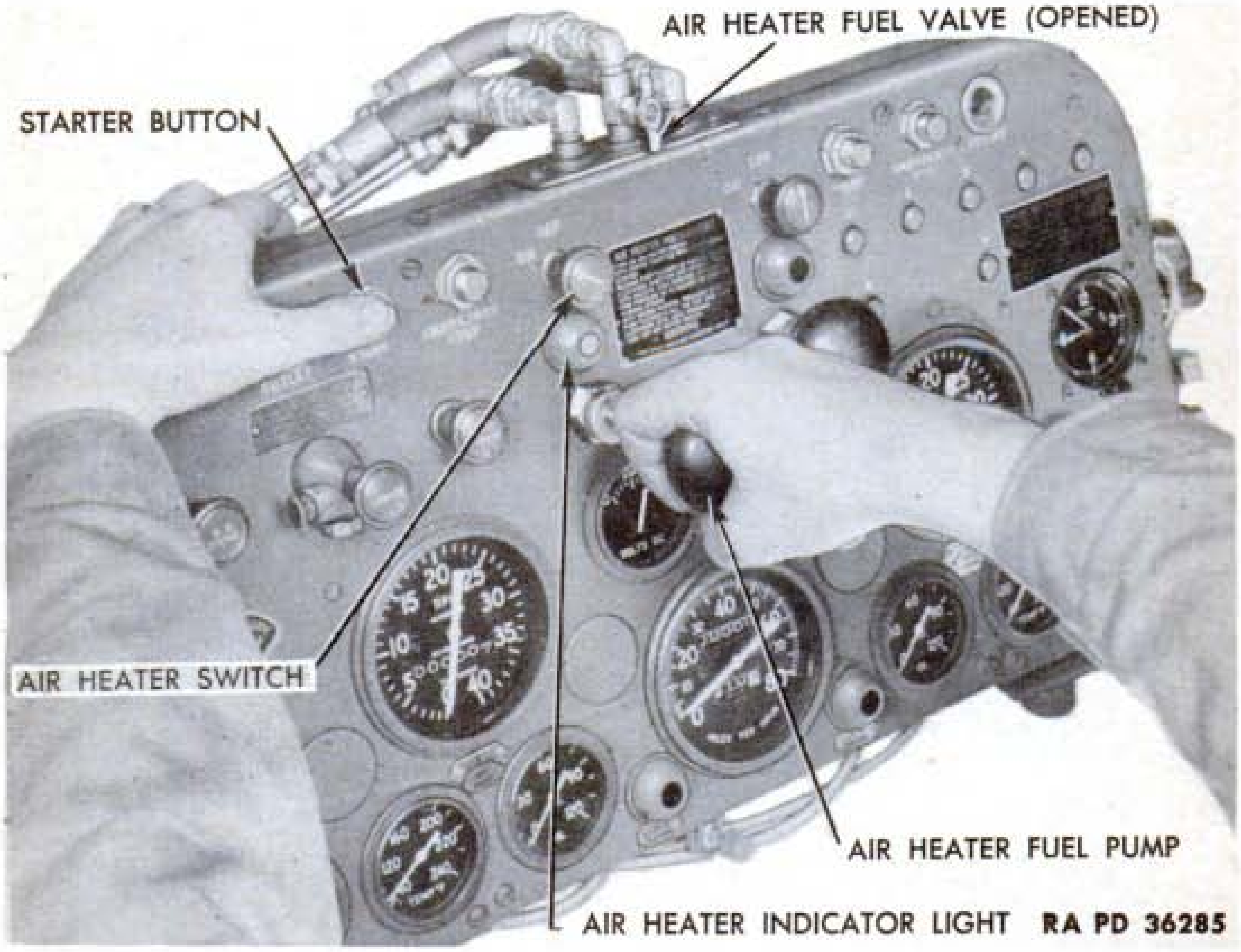

Figure 23—Operating Air Heater Fuel Pump, While Pressing Starter Button

(6) Lock out both clutches (fig. 17).

(7) Release throttle lever lock and push hand throttle (fig. 17) half-way forward, then return to "IDLING" position. As the throttle is moved out of "NO FUEL" position, the low oil pressure red warning lights will light. If they do not light, determine the cause.

(8) Start one engine at a time by pressing starter button. CAUTIONS: *Never attempt to start both engines simultaneously nor continue cranking engine for longer than 30 seconds at a time, as this causes excessive drain on the batteries.* If engine fails to start,

refer to Trouble Shooting section (par. 44). When engine starts, oil pressure must reach four to five pounds within 30 seconds.

(9) Set throttle for 1,000 to 1,200 revolutions per minute and lock. Speed of engines must not vary more than 200 revolutions per minute. Low oil pressure warning lights will go out and oil pressure gages must read 35 to 50 pounds.

(10) Release clutch lockouts so transmission oil pump will circulate oil while engines are warming up. Tachometer readings must not vary more than 100 revolutions per minute.

(11) Operate engines until engine temperature gages reach 50°F. Return throttle to idling position and lock. The vehicle now is ready to be driven.

c. Below Freezing Temperature. When the temperature is below freezing, the use of engine air heaters usually is necessary to start the engines.

(1) Follow steps (1) through (7) in preceding subparagraph 7 **b**.

(2) Open throttle slightly beyond "IDLING" position so engine will run at about 1,000 revolutions per minute and will not stall when started.

(3) Open air heater fuel valve fully by turning counterclockwise (fig. 31).

(4) Turn on air heater switch, for engine to be started. Red air heater indicator light will light (fig. 23).

(5) Unlock air heater fuel pump plunger, for engine to be started, by first turning handle to left or by pulling straight out sharply if plunger is equipped with snap-type lock.

(6) Press engine starter button with one hand and with other hand operate air fuel pump plunger with full, even strokes (fig. 23). After engine starts, push plunger in and lock it. For low temperature starting, a few extra strokes of the plunger after engine starts, with a pause after each stroke, will help keep engine from stalling.

(7) Close air heater fuel valve and turn off air heater ignition switch (fig. 23).

(8) After engines are started, proceed through steps (9), (10), and (11) in preceding subparagraph 7 **b** on starting engines at above freezing temperature.

d. Using One Engine to Start Other Engine. One engine can be used to start the other in case its electric starter does not function or to avoid excessive drain on battery in cold weather. After first engine is started, hold clutch pedal down, push in clutch lockout controlling clutch for running engine, and let clutch pedal up. Operate at 1,000 revolutions per minute long enough to warm up transmission oil (par. 7 **b** (11)). Hold clutch pedal down, push other clutch lockout in and accelerate engine while releasing clutch.

CAUTION: *If second engine does not start within 30 seconds, discontinue cranking and determine cause of failure to start.* As soon as engine starts, release accelerator to operate engines at 1,000 revolutions per minute until second engine is warmed up before driving the vehicle.

8. OPERATION OF THE VEHICLE.

a. General Driving Instructions. Before any attempt is made to operate the vehicle, the driver must be familiar with the function and operation of all controls and instrument panel units. Do not attempt to move the vehicle in close quarters without the aid of personnel outside the vehicle to serve as guides. Under ordinary conditions, drive the vehicle in the highest gear which will permit the engines to operate at the maximum governed speed of 2,100 revolutions per minute. When maximum pulling ability in any gear ratio is required, engine speed must never be allowed to drop below

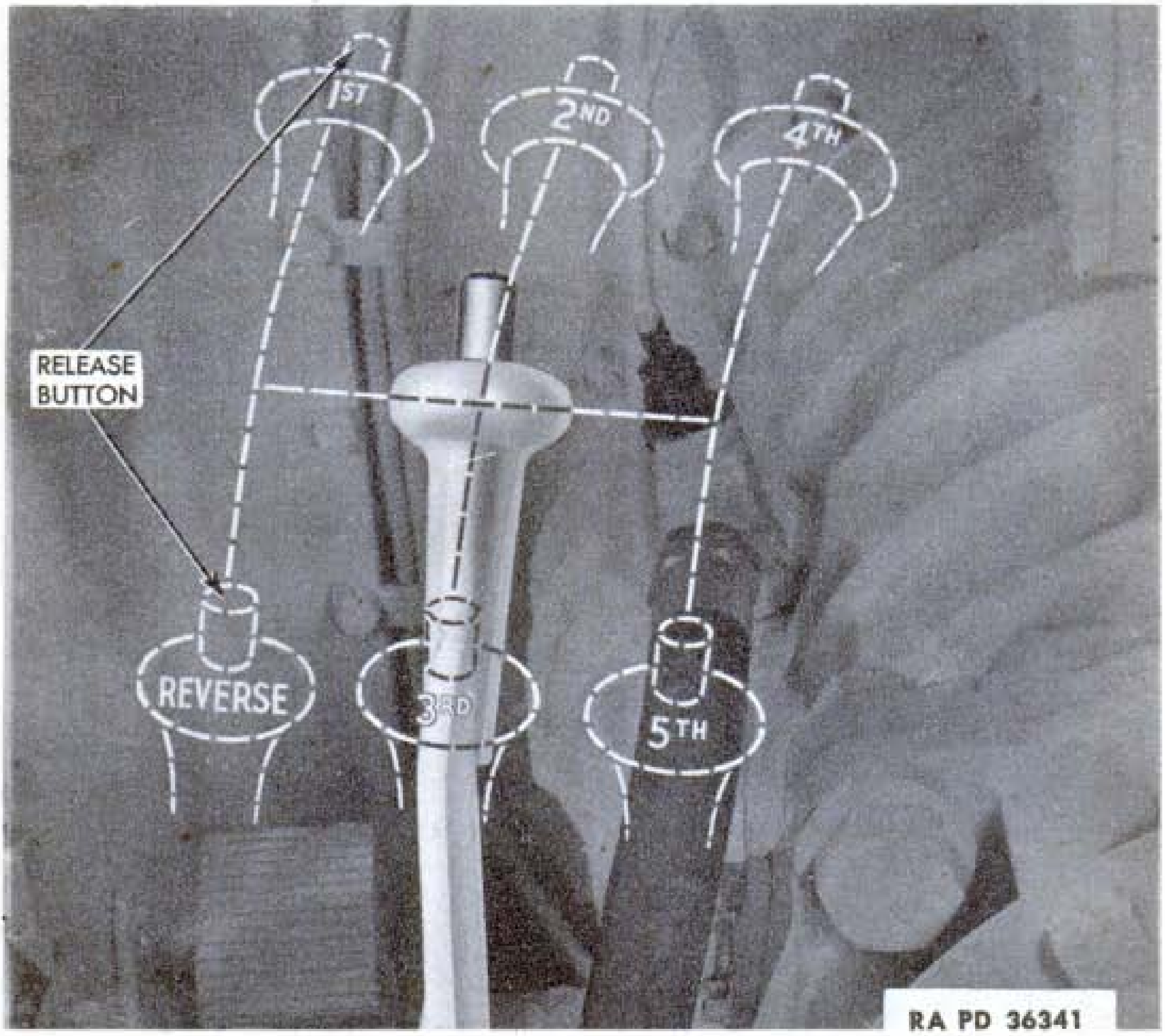

Figure 24—Gearshift Lever

1,500 revolutions per minute. When pulling up grades, always shift into lower gear before engines start to labor.

b. Operating the Clutch Pedal. Push clutch pedal all the way down before shifting gears. When starting the vehicle in motion, let clutch pedal up slowly so clutches will engage gradually and thus avoid excessive strain on the driving mechanism. Do not let pedal up so slowly that clutches slip unnecessarily during engagement, as this causes excessive wear on the clutch facings. When shifting gears after vehicle is in motion, let the clutch pedal up more quickly. This reduces clutch slippage, and also prevents vehicle speed from dropping. Quick engagement of clutches, but without excessive strain on driving mechanism, is particularly important, especially when shifting down into lower gear ratios when climbing grades. Avoid riding the clutch—resting foot on clutch pedal.

c. Shifting Gears Up. Read gear shifting instructions on transmission. See that throttle is in idling position and locked, that gearshift lever is in neutral, and that clutch lockouts are pushed in. First speed is a creeper gear which provides a very low gear ratio for maximum pulling when in deep mud or sand or climbing steep grades. Hold down safety button on gearshift lever to shift into first (fig. 24). Maximum speed in first gear is 2 miles per hour. On firm, level ground start in second gear. Hold clutch pedal down, and shift into second. Release clutch pedal gradually while pressing down on accelerator. When vehicle speed reaches approximately 6 miles per hour, shift into third. Apply a firm, steady pressure on gearshift lever so that synchronizer can adjust the speed of the shifting parts to make shifting easier and avoid clashing. When vehicle has been accelerated to approximately 10 miles per hour, shift into fourth and at 16 miles per hour, shift into fifth.

d. Shifting Gears Down. When climbing grades, it is necessary to shift into a lower speed to provide increased pulling ability and to prevent laboring of engines. Frequently it is necessary to shift into a lower gear when descending grades, and take full advantage of engine compression and friction to assist in braking. When climbing grades always make the down-shift before vehicle speed drops sufficiently to make it difficult for the engines to pick up the load. To shift down, depress clutch pedal and exert steady pressure on shift lever. Accelerating the engines while shifting will permit quicker shift.

e. Backing the Vehicle. Always bring vehicle to a complete stop before shifting into reverse gear. Hold down safety button on gearshift lever to shift into reverse (fig. 24). In reverse, do not permit engine speed to exceed 1,800 revolutions per minute. Avoid backing vehicle for any great distance as power train pressure lubricating system is inoperative in reverse.

f. Steering the Vehicle. The steering brakes also are used to stop the vehicle. Pulling back on the right lever slows down the right track, speeds up the left track, and steers the vehicle to the right. Pulling back on the left lever has the opposite result, and steers the vehicle to the left. Pull on the steering levers intermittently, when turning, instead of holding the steering brakes constantly applied. This reduces wear on the steering brakes and avoids unnecessary heating of the brakes. However, to make a quick, sharp turn, pull hard on steering lever being used and accelerate the engines. The greater the braking force applied and the greater the engine speed, the sharper the turn. CAUTION: *Steering levers always must be all the way forward in fully released position except when applying the brakes.* When driving straight ahead on level ground, keeping hands off the steering levers avoids the possibility of dragging the brakes. Dragging the brakes causes unnecessary wear, and greatly reduces lining life. It also may cause linings to become glazed, and thus reduce the effectiveness of the brakes.

g. Slowing or Stopping the Vehicle. To slow down or stop the vehicle, release the accelerator and pull back evenly on both steering levers. Do not depress the clutch pedal until the vehicle is almost stopped. Better control of the vehicle is thus maintained. After vehicle is stopped, shift transmission into neutral and set the parking brake. CAUTION: *When using the engines to assist in braking, always brake sufficiently so speed of vehicle never exceeds the speed for the gear being used, as shown on the chart on vehicle serial number plate* (fig. 9).

h. Descending Steep Grades. Excessive vehicle and engine speeds must be avoided when descending steep grades. Brake against engine compression by shifting into a gear low enough to control the vehicle speed before the steepest part of the grade is reached. Use the steering brakes to limit the engine speed to within the range recommended for the gear being used, as shown on the vehicle serial number plate (fig. 9). When in low gear, every mile-per-hour increase in vehicle speed increases the propeller shaft speed 1,000 revolutions per minute. Therefore the clutch should not be disengaged when braking against engine compression on down grades. Excessive vehicle speeds in any gear which drives the engines above 2,100 revolutions per minute are exceedingly dangerous, and if permitted to continue, may cause serious damage or personal injury.

9. STOPPING THE ENGINES.

a. If vehicle has been operated or if temperature of engines is above 180°F, allow engines to idle at 1,000 to 1,200 revolutions per minute for five minutes to dissipate heat from combustion area. Always idle the engines momentarily before stopping. Stopping the engines from high speeds will overload the governor control mechanism, and possibly cause damage. To stop engines, push throttle only slightly ahead of the idling position, not over 800 revolutions per minute, with a quick motion and immediately snap throttle back into "NO FUEL" position. Purpose of first pushing throttle ahead of idling position is to take up any slack in the linkage. If vehicle is to be left standing for considerable length of time, turn fuel selector valve to "OFF" and open battery master switches after engines are stopped. If above procedure does not stop engines, repeat procedure once more. If engines then do not stop, shift transmission into fifth speed, and stall engines by releasing the clutch pedal quickly with the brakes applied. The trouble must be eliminated before the engines are again started.

10. TOWING THE VEHICLE.

a. Equipment. Two towing shackles are provided on the front and two on the rear for attaching towing cables or towing bar (fig. 33). Every 3-inch gun motor carriage is equipped with a 20-foot steel towing cable. The towing pintle at center rear of vehicle is intended for attaching a reserve fuel and ammunition trailer and must never be used for heavy towing with a drawbar load in excess of 10,000 pounds or five tons.

b. General Instructions for Towing. A driver must be at the controls of the towed vehicle if at all possible; otherwise, a towing bar must be used instead of towing cables. Start towing vehicle in motion slowly and take all slack out of towing cables to avoid jerking the towed vehicle and possibly damaging the towing cables. Use gear ratios low enough to pull the towed vehicle without lugging the engines. Driver of towed vehicle must use brakes, as necessary, to keep towing cables taut at all times. When towing, make changes in direction by a series of slight turns so that vehicle being towed is as nearly as possible in line with the towing vehicle. This will prevent towing cables from rubbing against track which might damage both the cables and track blocks. Install grousers on towing vehicle if there is any possibility of insufficient traction and slipping tracks.

c. Attaching Towing Cables. Two cables must be used for towing, except in an emergency where only one cable is available or when a short hitch is necessary. Attach cable ends to towing shackles so the two cables are parallel. If only one towing cable is available, attach it to towing shackle on same side of both vehicles. To make a short hitch, lay the towing cable on ground close to and parallel with front of vehicle to be towed. Remove the shackles on the opposite end of this vehicle, place them on the towing cable, and attach them to the shackles on the vehicle to be towed. Cross the cable ends and attach cable eyes to the shackles on the towing vehicle.

d. Towing to Start Engines. Before towing the vehicle, check its fuel, lubricating oil and cooling system liquid, also make sure engines are in condition to be started. Lock out one clutch. Set throttle slightly ahead of "IDLING" position. Shift transmission into fifth gear, and hold clutch pedal down. Signal the towing vehicle to start. When towing speed is approximately 3 miles per hour, release clutch pedal. If engine does not start after towing for 25 yards, release throttle lock and return throttle to "NO FUEL" position and continue towing for another 200 yards before again advancing throttle to slightly ahead of idling position. As soon as engine starts, disengage the clutch and signal the towing vehicle to stop. Operate the engine at 1,000 to 1,200 revolutions per minute to warm up (temperature must be above 50°F) and then use the running engine to start the other engine (par. 7 **d**). NOTE: *Use air heaters if air temperature is below 50°F.* In extremely cold weather, tow vehicle approximately ¼ mile with throttle in "NO FUEL" position to help warm the engine before attempting to start it.

e. Towing a Disabled Vehicle. Inspect the condition of the vehicle to determine whether damage might result from towing. Check transmission oil level to make sure sufficient lubrication will be provided for the power train unit. A vehicle must never be towed backward any more than is absolutely necessary to position it so it can be towed forward. Transmission must be in neutral when towing vehicle backward. When vehicle is being towed, both clutches must be locked out and the transmission must be in fifth gear so transmission oil pump will supply lubricant to the power train unit.

Section IV

AUXILIARY EQUIPMENT, CONTROLS AND OPERATION

11. PERISCOPES.

a. Description. The vehicle is equipped with three periscopes, two for the driver and one for the assistant driver. These periscopes provide indirect vision when operating with the driver's doors closed (fig. 7). One periscope is held in a housing in each door and another is in a housing to the left of the driver's door. A cover with a spring hinge closes the opening in the housing when the periscope is removed or in a lowered position. Raising a periscope into position forces the cover open. The periscope can be rotated in any direction, and locked in position with a lock screw. Periscopes are installed from inside the vehicle. Each is held in position in the holder by tightening a knurled nut. A safety lock on the holder keeps the periscope from dropping out if the knurled nut loosens (fig. 25). The periscope heads are quickly detachable and purposely made of relatively fragile material which will shatter in case of a hit, so that periscope will not become wedged in the holder. Care must be exercised in handling periscopes to avoid breaking the heads. Three extra periscopes, and nine extra heads are stowed in the vehicle.

b. Removal of Periscope. With periscope all the way up in the holder, swing the safety lock out of the way. Support the periscope with one hand and, with the other hand, unscrew the knurled lock nut and withdraw the periscope from the holder.

c. Installation of Periscope. See that knurled locking nut on periscope is backed off and that safety lock on the holder is swung out of the way. Insert periscope in holder with locking nut stud in slot (fig. 25). Push up on periscope until stud strikes end of slot. Securely tighten knurled locking nut on periscope, and hook the safety lock into position across the slot.

d. Removing and Installing New Periscope Head. Remove periscope from holder. To remove head, unlock the head by turning the half-ring latches, on both sides of periscope nearest head, counterclockwise as far as possible and pull head out. To install head, press it into the periscope until fully seated, and turn both latches clockwise as far as possible.

e. Removing and Installing Periscope Housing. To remove the housing, first remove nuts and detach guard from top segments.

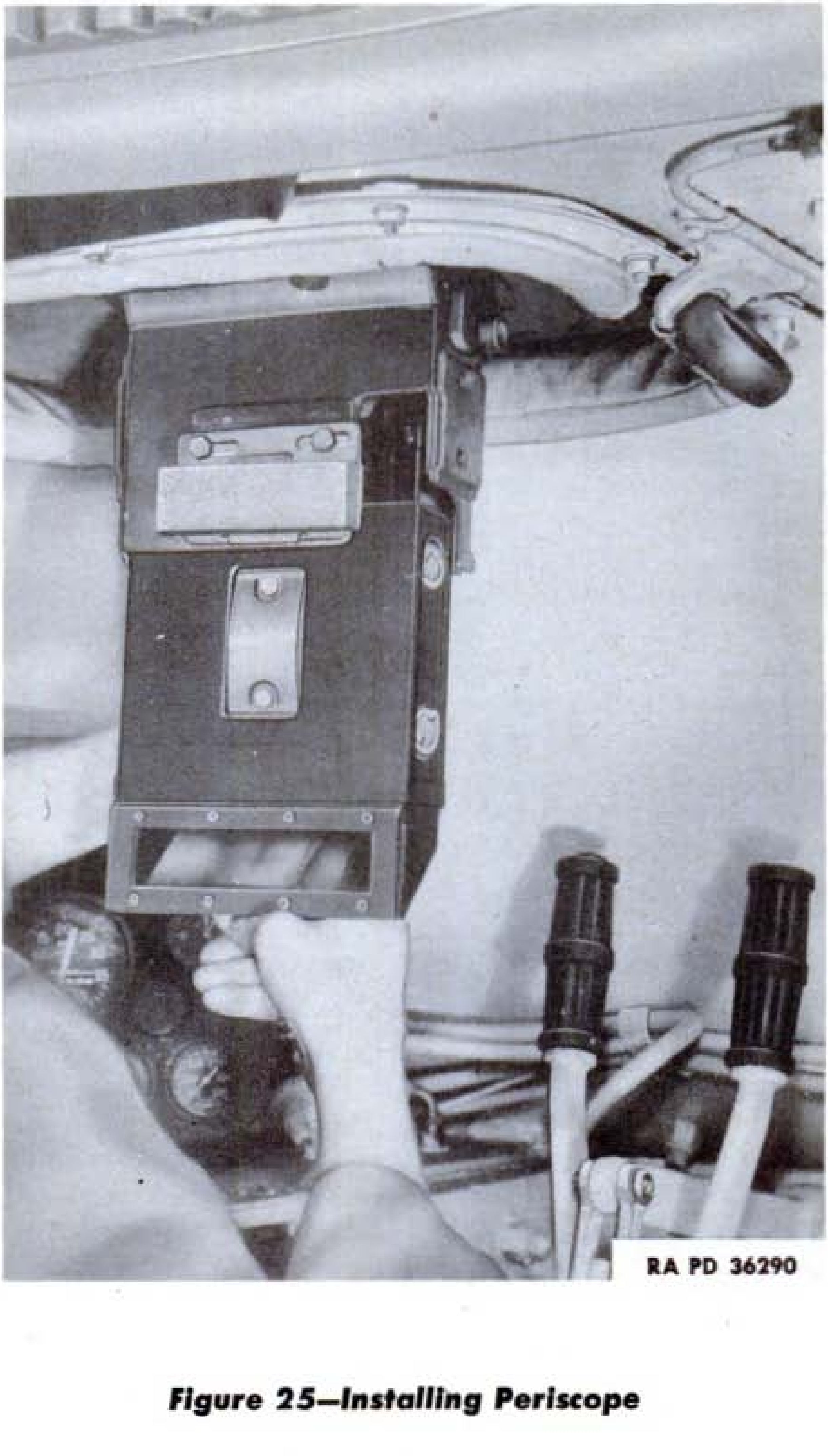

RA PD 36290

Figure 25—Installing Periscope

From under side, remove screws which attach lower segments to top segments while supporting holder, and remove holder and lower segments with gaskets. Lift out the upper segments and gaskets. To install the housing, first see that all surfaces on housing upper and lower segments and surfaces in mounting hole are wiped clean. Lubricate the friction surface with general purpose grease. Replace upper and lower segment gaskets, and assemble housing by reversing the removal procedure.

12. OPERATION OF PORTABLE FIRE EXTINGUISHERS.

a. General. The vehicle is equipped with two portable fire extinguishers for fires which may occur in driver's or fighting compartment or outside the vehicle. One portable extinguisher is mounted alongside the instrument panel (fig. 27), the other is mounted above the loader's seat on the side of the turret.

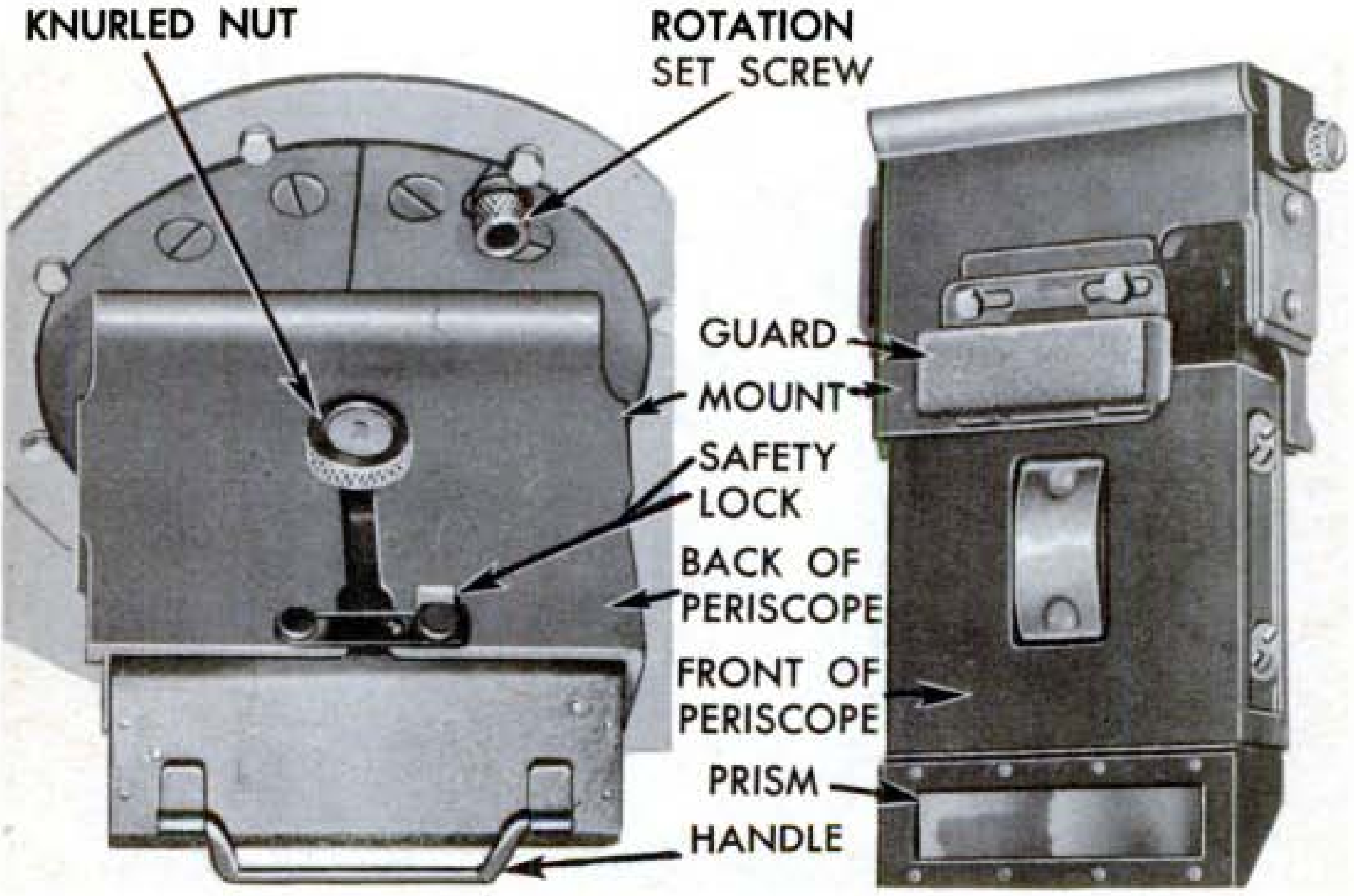

Figure 26—Rear and Front of Periscope

b. Operation of Portable Fire Extinguisher. Release lock on bracket, and remove extinguisher and swing nozzle up into position. Pull trigger, and direct the gas discharged from nozzle at base of flame (fig. 28). To extinguish flaming oil or gasoline, first direct the discharge at base of flame at near edge of fire. Then move extinguisher slowly from side to side, directing the gas so as to sweep the flame gradually off the burning liquid. Release trigger when fire is out. On the portable extinguishers, the valve closes when the

3-INCH GUN MOTOR CARRIAGE M10

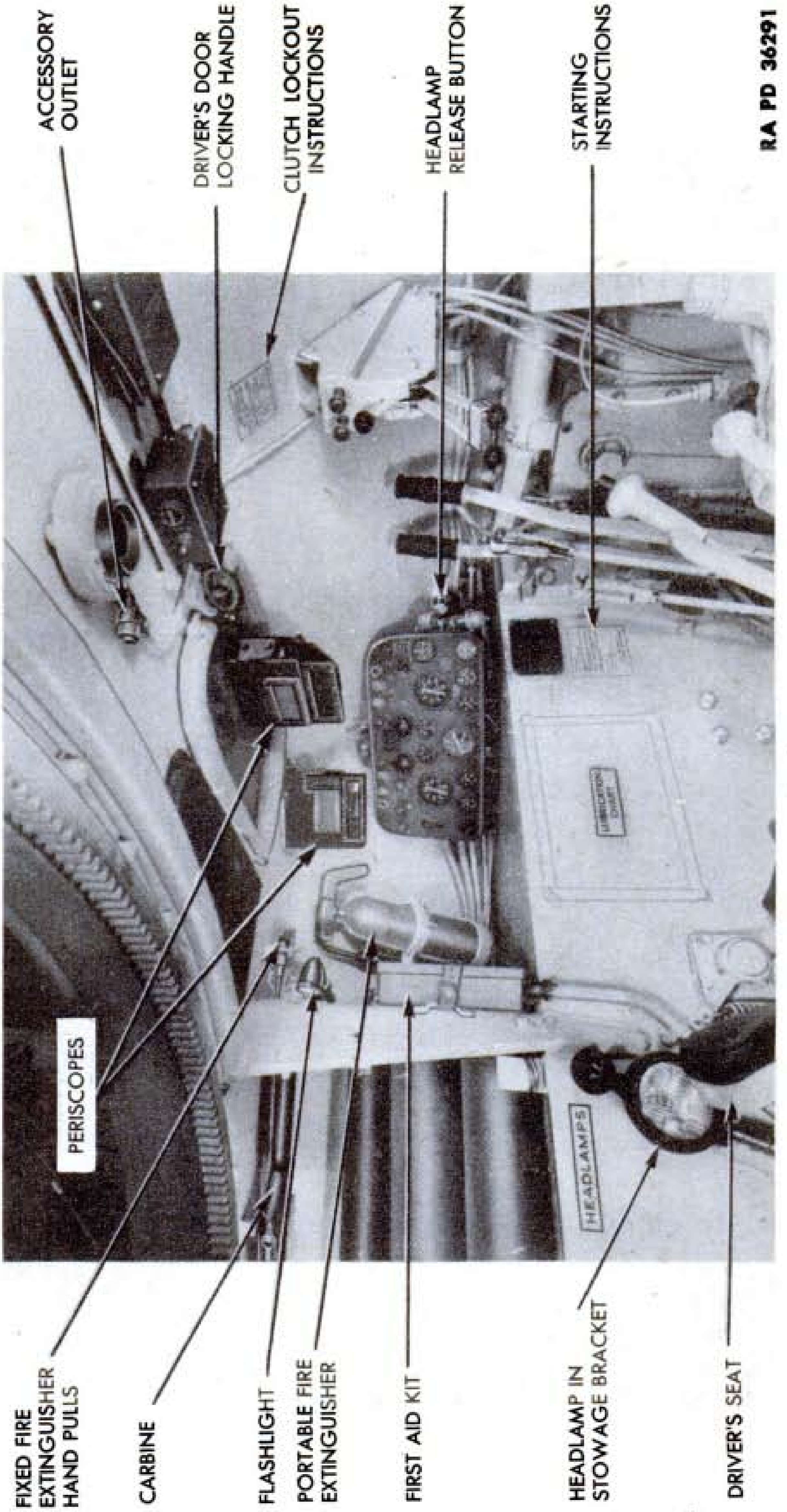

Figure 27—Driver's Station

trigger is released so an extinguisher can be used to put out several small fires with one charge of carbon dioxide. After using a portable fire extinguisher, it must be replaced with one which is fully charged at the first opportunity. For inspection of portable fire extinguishers, see paragraph 240 **b.**

13. OPERATION OF FIXED FIRE EXTINGUISHER SYSTEM.

a. General. A fixed fire extinguisher system is provided for putting out fires in the engine compartment only (fig. 157). Two carbon dioxide fire extinguisher cylinders in fighting compartment left step door are equipped with remote control heads, and connected by tubing to six discharge nozzles in the engine compartment. One cylinder can be discharged at a time, so protection against two fires is provided.

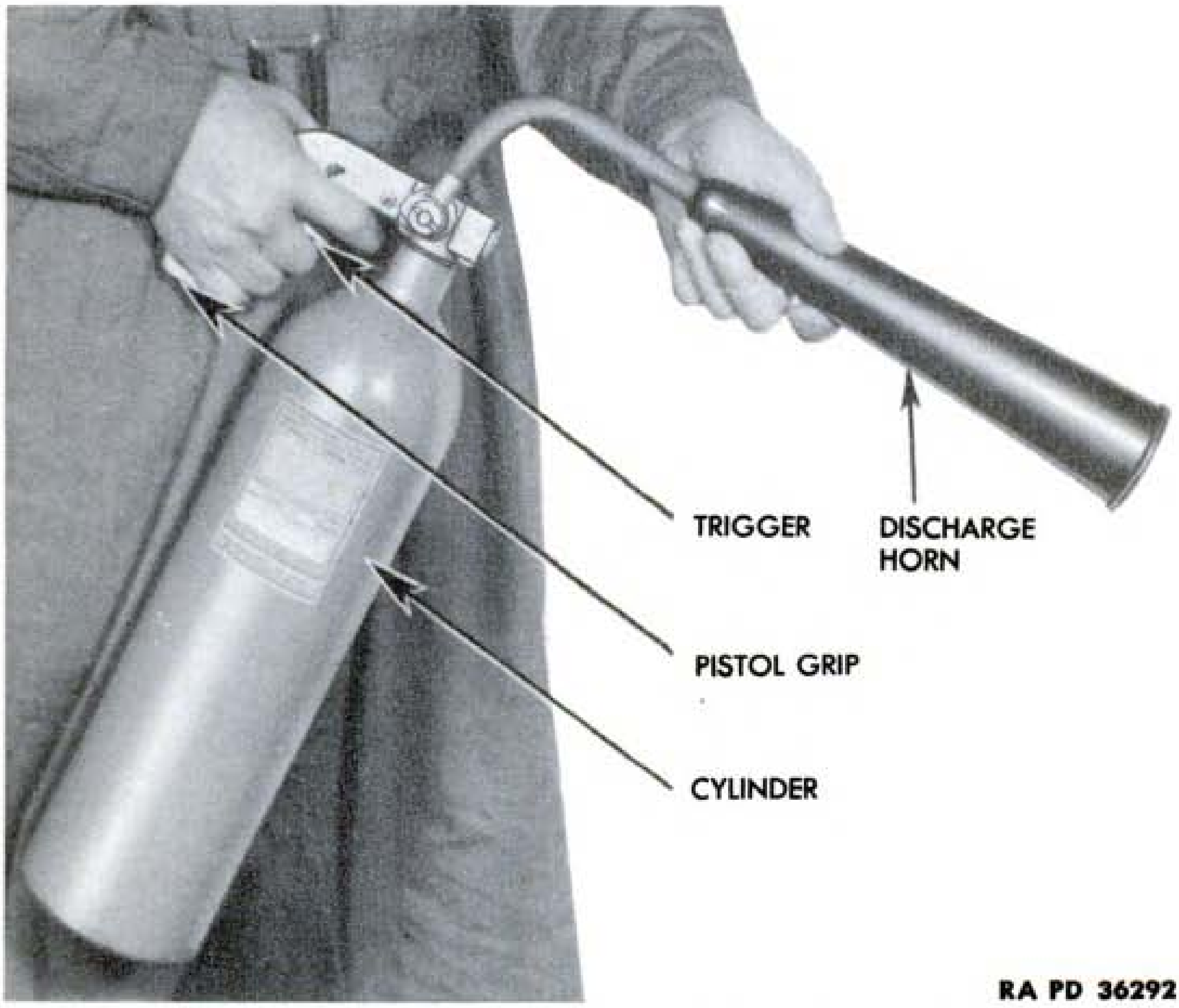

Figure 28—Portable Fire Extinguisher

b. Operation of Fixed Fire Extinguisher System. The fixed fire extinguisher system can be operated by two control handles in driver's compartment above driver's seat (fig. 27) or by two control handles on outside of hull at rear of turret on left (fig. 198). Pull out on one of the control handles to discharge one cylinder. If a second fire occurs before there is an opportunity to replace the discharged cylinder, pull out the other control handle. If the extinguisher system is being turned on for the second fire at the other pair of remote control handles, pull out both handles. The system also can be operated from inside the fighting compartment. Pull pin, with seal wire attached, out of lever on remote control head and pull lever down (fig. 29). If one cylinder was previously discharged, pull out both pins and pull both levers down. Once a valve has been opened, it cannot be closed, so the cylinder discharges completely. A discharged cylinder must be replaced at the first opportunity and the fixed fire extinguisher system must be inspected periodically (par. 29 b (16)).

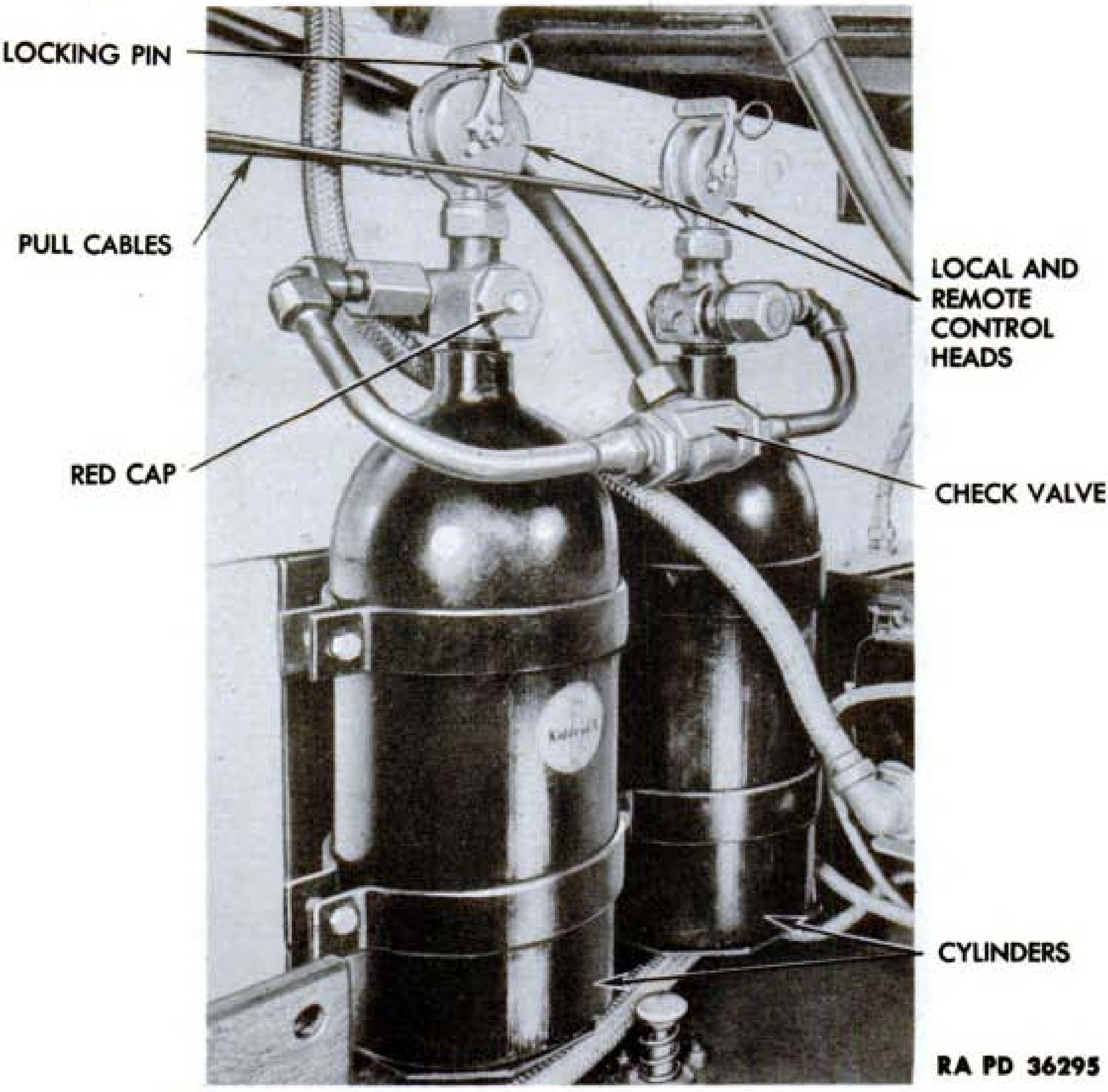

Figure 29—Fixed Fire Extinguisher Cylinders

14. CARE IN HANDLING FIRE EXTINGUISHER CYLINDERS.

a. Carbon dioxide fire extinguisher cylinders require careful handling because the gas is under high pressure. Cylinders must not be dropped, struck or handled roughly. They must be kept away from excessive heat which expands the gas, and may increase the pressure in the cylinders sufficiently to open the pressure relief valve and discharge the cylinder. Maximum safe storage temperature is 140°F.

Section V

OPERATION UNDER UNUSUAL CONDITIONS

15. OPERATION UNDER UNUSUAL CONDITIONS.

a. Special preparation, precautions, and extra care in servicing, are necessary to insure satisfactory operation of the vehicle under conditions of extreme cold and heat, also when operating over sandy and desert terrain, or in deep mud and snow. Information for operating under these unusual conditions is contained in the following paragraphs.

16. DIESEL FUEL FOR COLD WEATHER.

a. Diesel fuel procured under U. S. Army Specification 2-102, latest revision, must be used at low temperatures. Water in the fuel will form ice which may stop the flow of the fuel through the fuel lines or injectors. This possibility can be minimized by observing the following precautions: Keep fuel tanks as full as possible. Be sure that all containers are thoroughly cleaned, dry and free from rust before storing fuel in them. See that all containers have tight closures which will keep out water or snow, ice, dirt, or any other foreign substance. If there is any trace of water in the fuel tanks from which the vehicle is being refueled, do not completely empty the storage containers when filling the vehicle tanks. This will avoid the possibility of water getting into the fuel system.

17. LUBRICANTS FOR COLD WEATHER.

a. Lubrication at temperatures above zero°F is covered in paragraph 31, Lubrication Guide. The following instructions supplement this paragraph where temperatures fall below zero°F for long periods.

b. Several methods of keeping engine oil sufficiently fluid for proper lubrication at temperatures below zero°F are listed below.

Preference should be given to the methods in the order listed, according to the facilities available.

(1) When engines are stopped, drain engine lubricating oil from tanks and oil pans while it is hot, and store in a warm place until vehicle is to be operated again. Tag the vehicle in a conspicuous place in the driver's compartment to warn personnel that lubrication system is empty. If warm storage is not available, heat the oil before refilling lubrication system. (Avoid overheating the oil; heat only to the point where the bare hand can be inserted without burning.)

(2) If the vehicle is to be kept outdoors and if the oil cannot be drained, cover the engines with tarpaulin. About three hours before engines are to be started, place fire pots under the tarpaulin.

(3) Dilute the engine lubricating oil with Diesel fuel. One and one-half quarts of Diesel fuel should be added for each five quarts of engine oil. If possible, the diluent should be mixed with the oil before it is drained into the tanks. Otherwise the diluent should be added to the lubricating oil in the tanks when the engines are warm, and the engines should then be operated for a short time to thoroughly mix the diluent and the lubricating oil. If the vehicle is operated four hours or more, at operating temperature, redilution will be necessary if it is anticipated that the vehicle will be left standing unprotected for five hours or more. CAUTION: *Using a diluent will increase consumption of lubricating oil, and for this reason the level of the lubricating oil in the tanks should be checked more frequently during operation.*

c. **Transmission and Final Drives.** Use grade of engine oil specified in paragraph 31, Lubrication Guide, for operation below +32°F. When temperatures below zero°F are immediately anticipated and if the transmission and final drives do not already contain the specified grade of engine oil, drain transmission and final drives immediately after use, while lubricant is still warm. After standing overnight at subzero temperatures, warm up transmission after the engine has been warmed up by engaging clutch and maintaining engine speed for two minutes, or until gears can be engaged. Put transmission in low gear and drive vehicle 100 yards, being careful not to stall the engine. This will heat gear lubricants to the point where normal operation can be expected.

d. **Other Lubrication Points.**

(1) If vehicle has been operated 1,000 miles using general purpose grease No. 0 for lubrication, no special precautions are necessary for the bogie wheels and track roller bearings. If quantities of general purpose grease No. 1 are in these bearings, it will be necessary to disassemble, wash in dry-cleaning solvent, dry, and then relubricate with general purpose grease No. 0 for satisfactory operation.

(2) All other places where general purpose greases are specified in Lubrication Guide (par. 31), between +32°F and 0°F, shall be lubricated with the same lubricant below 0°F.

(3) For oilcan points where engine oil is prescribed above 0°F, use light preservative lubricating oil.

18. ANTIFREEZE FOR COOLING SYSTEM.

a. The cooling system will be protected with antifreeze compound for operation below +32°F. The following table lists the quantity of antifreeze compound to be added to prevent freezing at the indicated temperatures:

Freezing Point	Pints Antifreeze Compound Per Gallon of System Capacity
10°F (−12°C)	2
0°F (−18°C)	2½
−10°F (−24°C)	3
−20°F (−30°C)	3½
−30°F (−35°C)	4
−40°F (−41°C)	4½
−50°F (−47°C)	5

Cooling systems must be thoroughly flushed and checked for leaks before filling with antifreeze compound. Replace any hose connections which have been deteriorated and see that all hose connections are tight. Make sure that cooling system thermostats are functioning. If temperature is below freezing when filling with antifreeze compound, the water and antifreeze should be thoroughly mixed before pouring into the cooling system. Even though the engines are operated after filling the systems, the water may freeze before the thermostats open to permit the antifreeze compound to circulate through the radiators and become thoroughly mixed with the water. After filling, operate engines for a short period and again inspect for leaks. Whenever temperature is below freezing, the antifreeze compound in the cooling systems must be checked with antifreeze compound hydrometer (18-H-940) at After-operation Service.

19. COLD WEATHER CARE FOR THE ELECTRICAL SYSTEM.

a. Batteries. Extreme cold calls for extra battery care. Batteries must be tested more frequently to make sure they are fully charged so that starters will have sufficient cranking speed. Batteries with low charge freeze readily, and are thus ruined. Note following table:

Specific Gravity	Freezing Temperature
1.200	−17°F
1.220	−31°F
1.260	−75°F

To be accurate, hydrometer readings always must be corrected for low temperature according to the thermometer reading and correction scale on the hydrometer. See that battery terminals are free of corrosion and tight. Starting the engines places an excessive drain on the batteries. After starting, the engines must be operated for a sufficient time to replace the electrical energy consumed in cranking the engine. If batteries are discharged in attempting to start an engine, they must be recharged immediately. Do not attempt to start engines when batteries have been exposed to temperatures of −30°F, or lower. Batteries first must be warmed by charging them in the vehicle or removed and warmed in a heated space. Do not add water to a battery when it has been exposed to subzero temperatures unless the battery is to be charged immediately. If water is added and the battery not put on charge, the layer of water will stay on the top and freeze before it has a chance to mix with the acid.

b. Generators and Starters. Check the brushes, commutators, and bearings. The large surges of current which occur when starting a cold engine require good contact between brushes and commutators. Generators must be charging at maximum rate.

c. Air Heaters. Air heater ignition coils must be kept in operating condition with high tension wires to the electrodes free of ice.

d. Wiring. Check, clean and tighten all connections, especially the battery terminals. Care should be taken that no short circuits are present.

20. STARTING ENGINES IN FREEZING WEATHER.

a. Procedure. See subparagraph **b** below. When temperature is much below freezing, start one engine and after it has been warmed use it to start the other engine (par. 7 **d**). This procedure avoids additional drain on the batteries.

b. Starting the Engines at Below Freezing Temperature. When temperature is below minus 30°F, a tarpaulin, tent or portable shed and stoves or fire pots should be used to supply heat to the engines as an aid to starting. Vehicles should be kept in sheltered areas and shielded from the wind if possible.

c. Cold Weather Accessories. The use of any of the following is suggested, and can be used at the discretion of the officer in charge of materiel: Tarpaulins, tents or collapsible sheds to be used as protective covering, fire pots, blowtorches, or oil stoves for supplying heat. Extra batteries and facilities for changing batteries quickly, steel drums and suitable metal stands for heating drained engine oil before it is poured back into the lubricating oil tanks, temporary covers, improvised locally for radiators and engine compartment as an aid in maintaining higher operating temperatures.

21. OPERATING THE VEHICLE IN COLD WEATHER.

a. Engine Warm-up. Allow sufficient time for engines to warm up before driving the vehicle. After the engines are running smoothly, and with gearshift lever in neutral, push clutch lockouts in so that propeller shaft will turn. This will help warm up the transmission and operate the transmission oil pump.

22. OPERATING THE VEHICLE IN EXTREME HEAT.

a. Engine Cooling Systems. For operations in extremely high temperatures, the engine cooling systems must be kept clean and filled. Radiators must be kept clean to permit maximum dissipation of heat. Watch heat indicators for excessively high temperatures.

b. Lubrication. Correct grade of lubricant for high temperatures must be used for engines, gear cases and suspensions.

23. SAND AND DUST CONDITIONS.

a. Engine Air Cleaners. Air cleaners must be cleaned (par. 88 c) as frequently as necessary whenever operations permit, to keep sand and dust out of the engines.

24. DEEP MUD, SNOW AND ICE.

a. Grousers. Grousers must be installed (par. 162) (fig. 138) whenever necessary to provide sufficient traction to prevent excessive slipping of tracks.

b. Tracks and Suspension. Accumulations of mud or ice must be removed from tracks and suspension whenever opportunity permits.

Section VI

INSPECTION AND PREVENTIVE MAINTENANCE SERVICE

25. PURPOSE.

a. To insure mechanical efficiency, it is necessary that the vehicle be systematically inspected at intervals each day it is operated and weekly, so that defects may be discovered and corrected before they result in serious damage or failure. Certain scheduled maintenance services will be performed at these designated intervals. The services set forth in this section are those performed by driver or crew, before-operation, during-operation, at-halt, after-operation, and weekly.

b. Driver Preventive Maintenance Services are listed on the back of "Driver's Trip Ticket and Preventive Maintenance Service Record," W.D. Form No. 48, to cover vehicles of all types and models. Items peculiar to specific vehicles but not listed on W.D. Form No. 48 are covered in manual procedures under the items to which they are related. Certain items listed on the form that do not pertain to the vehicle involved, are eliminated from the procedures as written into the manual. Every organization must thoroughly school each driver in performing the maintenance procedures set forth in manuals whether they are listed specifically on W.D. Form No. 48 or not.

c. The items listed on W.D. Form No. 48 that apply to this vehicle are expanded in this manual to provide specific procedures for accomplishment of the inspections and services. These services are arranged to facilitate inspection and conserve the time of the driver and are not necessarily in the same numerical order as shown on W.D. Form No. 48. The item numbers, however, are identical with those shown on that form.

d. The general inspection of each item applies also to any supporting member or connection, and generally includes a check to see whether the item is in good condition, correctly assembled, secure, or excessively worn.

e. The inspection for "good condition" is usually an external visual inspection to determine whether the unit it damaged beyond safe or serviceable limits. The term "good condition" is explained further by the following: not bent or twisted, not chafed or burned, not broken or cracked, not bare or frayed, not dented or collapsed, not torn or cut.

f. The inspection of a unit to see that it is "correctly assembled" is usually an external visual inspection to see whether it is in its normal assembled position in the vehicle.

g. The inspection of a unit to determine if it is "secure" is usually an external visual examination, a hand feel, or a pry-bar check for looseness. Such an inspection should include any brackets, lock washers, lock nuts, locking wires, or cotter pins used in assembly.

h. "Excessively worn" will be understood to mean worn, close to or beyond serviceable limits, and likely to result in a failure if not replaced before the next scheduled inspection.

i. Any defects or unsatisfactory operating characteristics, beyond the scope of first echelon to correct, must be reported at the earliest opportunity to the designated individual in authority.

26. BEFORE-OPERATION SERVICE.

a. This inspection schedule is designed primarily as a check to see that the vehicle has not been tampered with or sabotaged since the After-operation Service was performed. Various combat conditions may have rendered the vehicle unsafe for operation and it is the duty of the driver to determine whether or not the vehicle is in condition to carry out any mission to which it is assigned. This operation will not be entirely omitted, even in extreme situations.

b. Procedures. Before-operation Service consists of inspecting items listed below according to the procedure described, and correcting or reporting any deficiencies. Upon completion of the service, results should be reported promptly to the designated individual in authority.

(1) ITEM 1, TAMPERING AND DAMAGE. Examine hull, armament, tracks, volute suspensions, engine compartment, and turret, for evidence of tampering or sabotage.

(2) ITEM 4, ACCESSORIES AND DRIVES. Examine all accessories such as generators, fans and fan shrouds for loose connections and mountings.

(3) ITEM 3, FUEL, OIL, WATER. Inspect tanks, filler caps, lines, hoses, and connections for evidence of leaks or tampering. Read fuel and oil gage on instrument panel and inspect water level in auxiliary water tanks. Add fuel, oil, and water if necessary.

(4) ITEM 6, LEAKS, GENERAL. Look on ground under vehicle and around differential housing and final drives for evidence of oil leaks.

(5) ITEM 7, ENGINE WARM-UP. Close battery master switch. Ammeter must read zero. Voltmeter must read 24 to 26 volts to indicate fully charged battery. Open fuel tank selector valve and

start engines. Do not operate air heaters when temperature of air or engine is above 50°F. Run engines at 1,000 to 1,200 revolutions per minute with clutch lockouts released and transmission in neutral, until water temperature reaches at least 50°F.

(6) ITEM 9, INSTRUMENTS.

(a) Oil Pressure Gages. Oil pressure gages must read 4 to 5 pounds when engine is idling and 35 to 50 pounds at 1,500 to 2,100 revolutions per minute. Stop engine immediately when red indicator lights come on above 1,000 revolutions per minute.

(b) Ammeter. Ammeter must show a high (+) charging rate for first few minutes. A high charging rate for extended period, with all electrical units turned "OFF", indicates a discharged battery or faulty regulator.

(c) Voltmeter. Voltmeter must not read more than 30 volts. Excessive voltage indicates a faulty generator regulator.

(d) Engine Temperature Gages. Engine temperature should rise slowly during warm-up period until at least 50°F is reached. There must not be more than 20°F variation between gages at 150°F. Stop engine if temperature exceeds 225°F.

(e) Transmission Oil Temperature Gage. Transmission must be operated in neutral during engine warm-up period. Stop engines if temperature exceeds 300°F during operation.

(f) Tachometers. Tachometers must register accumulated revolutions, and operate without fluctuating or grinding. Engine speeds with clutches locked out must be balanced within 100 revolutions per minute from 1,500 to 1,800 revolutions per minute. Correct engine idling speed is 400 to 450 revolutions per minute.

(g) Clock. Clock must be wound, running, and should indicate correct time.

(h) Fuel and Oil Gage. Fuel and oil gages should correctly indicate level of fuel in both upper fuel tanks and level of oil in both lubricating oil tanks.

(7) ITEM 10, SIREN. Sound siren for proper tone, if tactical situation permits.

(8) ITEM 12, LIGHTS. If tactical situation permits, turn all light switches to "ON" position, inspect all lights to see that they are burning, securely mounted, clean and that they go out when switches are turned "OFF."

(9) ITEM 13, SPROCKET AND HUB NUTS. Examine sprocket cap screws and hub nuts to determine that they are present and secure.

(10) ITEM 14, TRACKS. Inspect tracks for evidence of tampering or sabotage since the After-operation Service.

(11) ITEM 15, SPRINGS AND SUSPENSIONS. Inspect bogie suspensions, rollers and idlers for evidence of tampering or sabotage since the After-operation Service.

(12) ITEM 18, TOWING CONNECTIONS. Towing shackles, pins and pintle hook must be in serviceable condition.

(13) ITEM 20, DECONTAMINATOR. Decontaminator must be fully charged and securely mounted. Shake to determine contents.

(14) ITEM 21, TOOLS AND EQUIPMENT. Inspect all tools and equipment for condition, proper stowage, and serviceability, using the On Vehicle Materiel List (par. 32).

(15) ITEM 23, DRIVER PERMIT AND FORM 26 (ACCIDENT REPORT FORM). These forms must be present, legible and safely stowed.

(16) ITEM 2, FIRE EXTINGUISHER. Inspect portable fire extinguishers to see that they are in place, securely mounted and that seals are not broken. Inspect fixed fire extinguisher system to see that pull handles and control head handles have not been operated and that red sealing caps are intact. Nozzles must be free from obstructions.

(17) ITEM 22, ENGINE OPERATION. After proper operating temperature (150°F to 175°F) has been reached, idle the engine and stop by moving throttle to "NO FUEL" position. Start and run each engine separately, accelerating a few times while listening for excessive vibration or unusual noises.

(18) ITEM 25, DURING-OPERATION SERVICE. Immediately after putting the vehicle in motion, start the During-operation Service.

27. DURING-OPERATION SERVICE.

a. While vehicle is in motion, listen for any sounds such as rattles, knocks, squeals, or hums that may indicate trouble. Look for indications of trouble in cooling system and smoke from any part of the vehicle. Be on the alert to detect any odor of overheated components or units such as generator, brakes, or clutch, fuel vapor from a leak in fuel system, exhaust gas, or other signs of trouble. Any time the brakes are used, gears shifted, or vehicle turned, consider this a test and notice any unsatisfactory or unusual performance. Watch the instruments constantly. Notice promptly any unusual instrument indication that may signify possible trouble in system to which the instrument applies.

b. Procedures. During-operation Services consist of observing items listed below according to the procedures following each item, and investigating any indications of serious trouble. Notice minor deficiencies to be corrected or reported at earliest opportunity, usually at next scheduled halt.

(1) ITEM 26, STEERING BRAKES. Apply both steering brakes at slow speed to test for effectiveness. Free travel must be at least eight inches and not more than 10 inches. Test each brake for effective steering with moderate application.

(2) ITEM 27, HAND BRAKES. Stop vehicle and apply hand parking brake. Must hold vehicle stationary on a reasonable incline.

(3) ITEM 28, CLUTCHES. Clutch pedal free travel should be 2 inches; minimum allowable free travel is 1 inch. Clutches must fully release and must not slip or chatter. The two tachometer readings must not vary more than 200 revolutions per minute during clutch engagement. After shifting gears, listen for noisy release bearings.

(4) ITEM 29, TRANSMISSION. Transmission gears must shift smoothly, operate quietly, and not slip out of mesh. Stop vehicle in case of grinding or any unusual noise.

(5) ITEM 31, ENGINE AND CONTROLS. Note power of engine when accelerating, any excessive smoking, detonation, misfiring, stalling or overheating. Test governor control. Maximum no load engine speed is 2,250 revolutions per minute; maximum full load speed is 2,100 revolutions per minute.

(6) ITEM 32, INSTRUMENTS.

(a) Oil Pressure Gages. Oil pressure gages must register 35 to 50 pounds at operating speeds. Stop engine if red indicator light comes on above 1,000 revolutions per minute.

(b) Ammeter. Ammeter will show a high charging rate for first few minutes. A high charging rate for extended period with all electrical units turned off, indicates a discharged battery or faulty regulator.

(c) Engine Temperature Gages. Engine temperature must not exceed 225°F nor vary more than 20°F between engines.

(d) Transmission Temperature Gage. Transmission temperature gage reading must not exceed 300°F.

(e) Tachometers. Tachometers must correctly indicate engine speed and register accumulated crankshaft revolutions. Readings must not vary more than 100 revolutions per minute with both clutches engaged.

(f) Speedometer. Speedometer must register correct vehicle speed and accumulated mileage.

(g) Voltmeter. Voltage reading should not exceed 30 volts.

(h) Fuel and Oil Gage. Fuel and oil gage should correctly indicate level of fuel in upper fuel tanks and level of oil in both lubricating oil tanks.

(7) ITEM 36, GUNS AND MOUNTINGS, ELEVATING, TRAVERSING AND FIRING CONTROLS. While the vehicle is in operation, but before it is used in combat, check both the manual turret-traversing and gun-

elevating mechanisms. Check both manual and electrical gun-firing controls. Be sure that all mechanism responds properly.

28. AT-HALT SERVICE.

a. At-halt Services may be regarded as minimum maintenance procedures. They should be performed under all tactical conditions, even though more extensive maintenance services must be slighted or omitted altogether.

b. Procedures. At-halt Services consist of investigating any deficiencies noted during operation, inspecting items listed below according to the procedures following the items, and correcting any deficiencies found. Deficiencies not corrected should be reported promptly to the designated individual in authority.

(1) ITEM 39, TEMPERATURE. (HUBS AND FINAL DRIVES). Hand-feel the hubs of sprockets, idlers, bogie wheels, and track support rollers to determine whether they are abnormally hot.

(2) ITEM 38, FUEL, OIL AND WATER. Determine quantity of fuel, oil, and water to make sure supply is adequate for mission. Add, if necessary.

(3) ITEM 45, TRACKS. Remove stones and other foreign material from tracks. Inspect tracks for correct tension, loose, worn, or missing connectors and wedges; also worn, damaged, or dead links.

(4) ITEM 42, SPRINGS AND SUSPENSIONS. Examine suspensions for broken or loose parts. Remove any debris lodged in bogie assemblies.

(5) ITEM 44, SPROCKET AND HUB NUTS. Examine sprocket cap screws and hub nuts to determine that they are present and secure.

(6) ITEM 46, LEAKS, GENERAL. Examine bottom of hull and ground under vehicle for evidence of any leaks. Inspect the hull, fighting compartment and engine compartments for fuel, oil, or water leaks. Tighten any loose connections.

(7) ITEM 50, TOWING CONNECTIONS. Towing shackles, pins, and pintle hook must be in usable condition.

(8) ITEM 47, ACCESSORIES. Investigate possible causes of improper performance noted during operation. Examine generator for security of mounting.

(9) ITEM 48, AIR CLEANERS. When operating under extremely dusty conditions, clean air cleaners as often as required, when tactical situation permits. Examine filter elements and clean if necessary.

(10) ITEM 52, APPEARANCE AND GLASS. Thoroughly inspect exterior of vehicle for missing pioneer equipment. Inspect all lights and vision devices. Clean if necessary. See that all doors, covers, and hatches can be closed and locked securely.

29. AFTER-OPERATION AND WEEKLY SERVICE.

a. The After-operation Service is particularly important because at this time the driver inspects his vehicle to detect any deficiencies that may have developed and corrects those he is permitted to handle. He should report promptly, to the designated individual in authority, the results of his inspection. If this schedule is performed thoroughly, the vehicle should be ready to operate immediately. The Before-operation Service, with a few exceptions, is then necessary only to ascertain whether the vehicle is in the same condition in which it was left upon completion of the After-operation Service. The After-operation Service should never be entirely omitted, even in extreme tactical situations, but may be reduced to the bare fundamental services outlined for the At-halt Service if necessary.

b. Procedures. When performing the After-operation Service the driver must remember and consider any irregularities noticed during the day in the Before-operation, During-operation, and At-halt Services. The After-operation Service consists of inspecting and servicing the following items. Those items of the after operation that are marked by an asterisk (*) require additional weekly services, the procedures for which are indicated in subparagraph *(b)* of each applicable item.

(1) ITEM 55, ENGINE OPERATION. Lock out both clutches and start one engine at a time. Increase speed slowly and then accelerate momentarily several times. Listen for uneven firing, detonation, excessive vibration, and unusual noises. Return to idling speed and stop engines.

(2) ITEM 56, INSTRUMENTS.

(a) Oil Pressure Gages. Oil pressure gages must read 35 to 50 pounds at 1,500 to 2,100 revolutions per minute.

(b) Ammeter. Ammeter must read zero or show slight (+) charge at idling speed.

(c) Voltmeter. Voltage reading of 24 to 26 volts indicates fully charged batteries.

(d) Engine Temperature Gages. Engine temperature must not exceed 225°F.

(e) Transmission Temperature Gage. Transmission temperature must not exceed 300°F.

(f) Tachometer. Tachometer must indicate engine speed and register accumulated revolutions and operate without fluctuating. Correct idling speed is 400 to 450 revolutions per minute; normal operating speed is 1,500 to 2,100 revolutions per minute; no load maximum governed speed, 2,250 revolutions per minute; full load maximum governed speed, 2,100 revolutions per minute.

(3) ITEM 70, STEERING LINKAGE. Pull back steering levers to check free travel, which must be at least 5 inches. When travel allows lever to come back to a vertical position before the brake shoe contacts the drum, brake linkage must be adjusted.

(4) ITEM 67, ENGINE CONTROLS. Look for worn or disconnected engine control linkage. Investigate any improper action of control linkage noted during operation.

(5) ITEM 57, SIREN. Sound siren for proper tone, if tactical situation permits.

(6) ITEM 74, GEAR OIL LEVEL. With the vehicle on level ground, read oil level on transmission filler cap dip stick and add SAE 50 engine oil above 32°F, or SAE 30, from 32°F to 0°F, to reach "FULL" mark.

(7) ITEM 54, *FUEL, OIL AND WATER.

(a) Fill both fuel tanks with Diesel fuel. Add engine oil to both engine lubricating oil tanks until gage reads "FULL." Do not overfill. Use SAE 30 above 32°F or SAE 10 oil from 32°F to 0°F. Turn auxiliary water tank filler cap to first position to release pressure before removing cap. Allow engine to cool if overheated, before adding water. Have antifreeze tested if considerable water is added.

(b) Weekly. Have antifreeze tested to be sure protection is adequate for prevailing temperature.

(8) ITEM 73, LEAKS, GENERAL. Examine all fuel, oil, and water lines, pipes, connections, seals, gaskets, and tanks for leaks. Tighten loose connections and drain hull of any accumulated oil, water, or fuel.

(9) ITEM 79, ARMOR. Examine hull, turret, and gun mount shield and trunnion, for fractures or damage that would render vehicle unsafe for combat duty. All doors, covers, and hatches must operate freely and lock securely.

(10) ITEM 68, *TRACKS.

(a) Remove all foreign matter such as mud, stones, and sticks from tracks. Look for loose and worn track connectors and wedges. Track must not have more than ¾-inch sag nor less than ½-inch sag, measured between second and third track support rollers.

(b) Weekly. Tighten all track wedges securely. Examine tracks carefully for worn guides and links, also dead links. Adjust track tension so as to have not more than ¾-inch sag nor less than ½-inch sag, measured between second and third track support rollers.

(11) ITEM 69, *SPRINGS AND SUSPENSIONS.

(a) Examine the volute springs for permanent set and breakage. Volute springs are unserviceable when three or more coils of both springs contact lower spring seat. Look for looseness, wear, or damage

at bogie levers and arms, track support rollers, and bogie wheels. Inspect bogie wheels for grease leaks. Remove all stones and trash lodged in bogie assemblies.

(b) Weekly. Tighten all bogie brackets, sprocket wheels, track support rollers, bogie wheels, mounting bolts, and nuts or cap screws.

(12) ITEM 77, TOWING CONNECTIONS. Examine towing shackles, pintle hook, and lifting eyes to see that they are in serviceable condition. Make sure pintle hook latch operates freely, and that lock pin is attached to chain. Lubricate, if necessary.

(13) ITEM 64, *ELECTRICAL WIRING.

(a) Examine conduits for damaged condition, and tighten all loose connections.

(b) Weekly. Clean all accessible wiring and look for loose connections, and cracked insulation.

(14) ITEM 65, *AIR CLEANERS.

(a) Remove air cleaners and inspect elements and condition of oil. If necessary, clean elements and refill with oil to "LEVEL" mark on body. Examine condition of gaskets before installation.

(b) Weekly. Clean all air cleaners and refill with oil.

(15) ITEM 66, FUEL FILTERS. Drain approximately ¼ pint from each primary and secondary fuel filter to remove trapped water and sediment.

(16) ITEM 60, FIRE EXTINGUISHER. Inspect portable fire extinguishers to see that they are in place, securely mounted, and that seals are not broken. See that red sealing caps on fixed fire extinguisher cylinder valves are intact. Discharged cylinders must be replaced. Make sure mountings are tight, and nozzles are free from obstruction.

(17) ITEM 62, *BATTERY.

(a) Battery connections and mountings must be kept clean and tight. Electrolyte must be ⅜ inch above plates in each cell. Add fresh, clean water as required. Turn battery master switch and radio switch to "OFF" position after completing services.

(b) Weekly. Clean battery and terminal connections. Tighten connections and battery straps if necessary.

(18) ITEM 81, TURRET AND GUN MOUNT MECHANISM AND CONTROLS. Release turret locks and gun traveling lock. Traverse turret full 360 degrees in both directions. Elevate and depress gun. All mechanisms and controls must operate freely and without bind or excessive play throughout entire limit of travel. Secure gun traveling lock and turret locks. Tighten all loose wiring connections and attaching parts. Test operation of both manual and electrical firing controls, and sighting equipment. Guns must be cleaned, properly oiled, and covered.

(19) ITEM 59, LIGHTS. If tactical situation permits, turn all light switches to "ON" position, inspect all lights to see that they are lit, clean, and securely mounted, and go out when switches are turned "OFF".

(20) ITEM 80, VISION DEVICES. Clean and install serviceable periscope heads or assemblies as required. Mounts must pivot or rotate without binding.

(21) ITEM 61, DECONTAMINATOR. Decontaminator must be fully charged and securely mounted. Shake to determine contents.

(22) ITEM 84, CLEAN VEHICLE. Remove all expended material, and clean interior of vehicle thoroughly. Clean exterior as necessary, making sure identification markings are visible.

(23) ITEM 83, *LUBRICATE AS NEEDED.

(a) Oil or lubricate all parts as required when performing After-operation Service. For specific intervals, and lubricants to be used, refer to War Department Lubrication Guide No. 113 (figs. 30 and 31).

(b) Weekly. Perform regularly scheduled lubrication if this service is due.

(24) ITEM 85, *TOOLS AND EQUIPMENT.

(a) Inspect all tools and equipment for condition, proper mounting and serviceability using On Vehicle Materiel List, paragraph 32. Replace missing items and replenish supplies.

(b) Weekly. Clean all tools and equipment. Replace items that are unserviceable.

Section VII

LUBRICATION

30. INTRODUCTION.

a. Lubrication is an essential part of preventive maintenance, determining to a great extent the serviceability of the parts and assemblies.

31. LUBRICATION GUIDE.

a. Lubrication instructions for the 3-inch Gun Motor Carriage M10 are consolidated in a Lubrication Guide (figs. 30 and 31). These specify points to be lubricated, the periods of lubrication, and the lubricants to be used.

b. Supplies. In the field it may not always be possible to supply a complete assortment of lubricants called for by the Lubrication Guide to meet the recommendations. It will be necessary to make the best use of those available, subject to the inspection of the officer concerned, in consultation with proper ordnance personnel.

c. Lubrication Notes. The following notes apply to the Lubrication Guide (figs. 30 and 31). All note references in the guide itself are to the step below having the corresponding note number. Reference is made to OFSB 6-10 and OFSB 6-4 for additional lubrication information and to the product guide, OFSB 6-2, for the latest approved lubricants.

(1) FITTINGS. Clean before applying lubricant. Lubricate universal joints, bogie wheels, idler and track support rollers, tachometer and speedometer adapters until lubricant overflows at relief valve. Lubricate other points until new lubricant is forced from the bearing, unless otherwise specified. CAUTION: *Lubricate suspension points after washing vehicle.*

(2) INTERVALS indicated are for normal service. For extreme conditions of speed, heat, water, sand, mud, snow, dust, etc., reduce interval by 1/3 or 1/2, or more if conditions warrant.

(3) AIR CLEANERS. Daily, when operating on dirt roads or cross country, or every 250 miles, when operating on paved roads or during wet weather, drain, clean and refill with used crankcase oil or OIL, engine, crankcase grade. Every 100 to 500 miles, depending on operating conditions, remove all 6 air cleaners and wash all metal parts in Diesel fuel. Refill oil reservoirs until oil reaches "FULL" mark. CAUTION: *Do not overfill air cleaner oil reservoirs.* Keep all air cleaner connections clean and tight. Inspect grommets, seals, and gaskets, for wear and replace worn parts.

CARRIAGE, MOTOR, GUN, 3-in., M10

ORDNANCE SERIAL NUMBER located on name plate inside fighting compartment.

Lubricant • Interval

CAUTION—Lubricate Dotted Arrow Points on ***Both Sides***. Points on ***Opposite Side*** are Indicated by Dotted Short-Shaft Arrows.

Diff. and final drive drain plug

Transmission drain plug
(Remove cover plate to reach)

SERVICED FROM FIGHTING COMPARTMENT

Throttle idler shaft **CG 1**

Transfer case (See Table) **OE**
(Note 7)

Clutch shifter shaft brg. **CG**
(Note 18)

Generator (grease cup) **WB 1**
(Refill cup, turn 1 full turn)

Tachometer adapter **CG 1**

Clutch release bearing **WB ½**
(Sparingly)

Engine lub. oil tank **OE ½**
(See Table)
(Fill cap) (Note 4)

SERVICED FROM ENGINE COMPARTMENT

Clutch pilot bearing **BR**
(Note 8)

Fuel filter (secondary)
(Note 9)

Starter (SAE 30) **OE**
(3 oilers) (Note 18)

Engine lub. oil tank drain plug
(To reach, remove cover under hull)

Air cleaners **OE**
(Note 3)

Fuel filter (primary)
(Note 9)

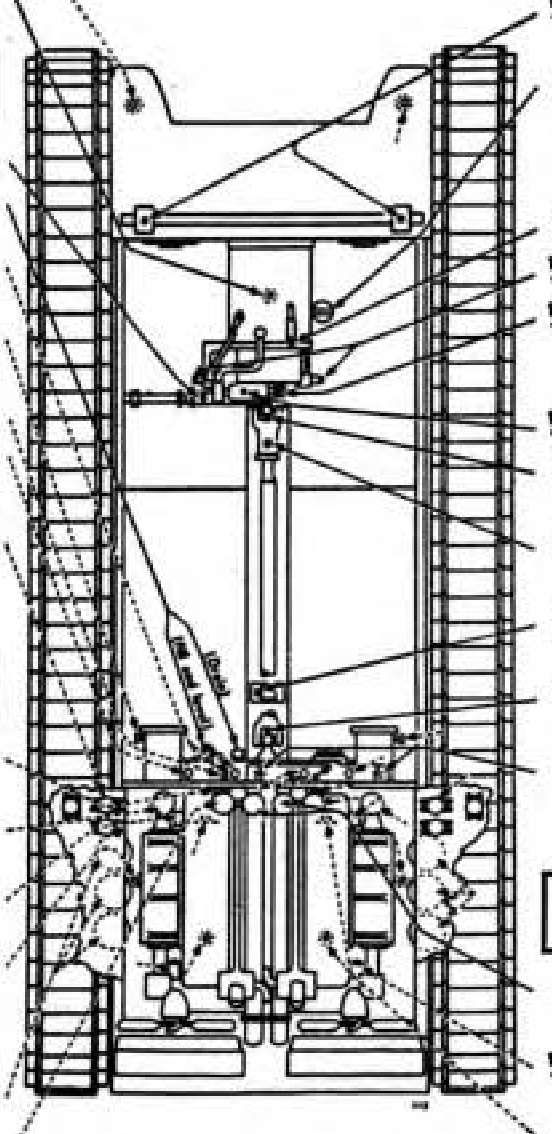

Interval • Lubricant

CAUTION—Lubricate Dotted Arrow Points on ***Both Sides***. Points on ***Opposite Side*** are Indicated by Dotted Short-Shaft Arrows.

SERVICED FROM FIGHTING COMPARTMENT

½ **CG** Steering brake lever cross shaft

3 **OE** Trans., diff. and final drives (See Table)
(Fill cap, level gage)
(Note 7)

1 **CG** Speedometer adapter

¼ **CG** Gearshift lever yoke shaft

¼ **OE** Parking brake lever shaft link eye (oil hole)
(Some models)

¼ **CG** Parking brake lever shaft

1 **CG** Universal joint (fitting)
(Note 10)

1 **CG** Slip joint (plug)
(Note 10)

1 **CG** Clutch selector lever shaft (Note 11)

1 **CG** Universal joint (fitting)
(Note 10)

Trans., diff. and final drive oil cooler drain plugs
(Note 7)

SERVICED FROM ENGINE COMPARTMENT

Lubricating oil filters
(Note 5)

½ *Lubricating oil strainer*
(Late models) (Note 6)

Crankcase drain plugs
(To reach, remove cover under hull)

NOTE—See page 4 for lubrication of SUSPENSION SYSTEM and GUN TURRET.

KEY

LUBRICANTS

OE—OIL, engine
Crankcase grade
(unless otherwise specified)

CG—GREASE, general purpose
No. 1 (above +32° F.)
No. 0 (below +32° F.)

WB—GREASE, general purpose
No. 2

BR—GREASE, ball and roller bearing

INTERVALS

¼—250 MILES
½—500 MILES
1—1,000 MILES
3—3,000 MILES

CHECK DAILY
Air cleaners
Engine oil tanks
Primary and secondary fuel filters

TABLE OF CAPACITIES AND LUBRICANTS TO BE USED

UNIT	CAPACITY (Approx.)	LOWEST EXPECTED AIR TEMPERATURE		
		+32° F. and above	+32° F. to 0° F.	Below 0° F.
Engine Lub. Oil Systems (each)	32 qt.	OE SAE 30	OE SAE 10	Refer to OFSB 6-11
Transfer Case	2½ qt.	OE SAE 30	OE SAE 30	
Trans., Diff. and Final Drives	152 qt.	OE SAE 50	OE SAE 30	

OFSB 6-G-170 (115)

RA PD 36296

Figure 30—Lubrication Guide

LUBRICATION

CARRIAGE, MOTOR, GUN, 3-in., M10

ORDNANCE SERIAL NUMBER located on name plate inside fighting compartment.

CAUTION—Lubricate SUSPENSION SYSTEM POINTS on BOTH SIDES of MOTOR CARRIAGE

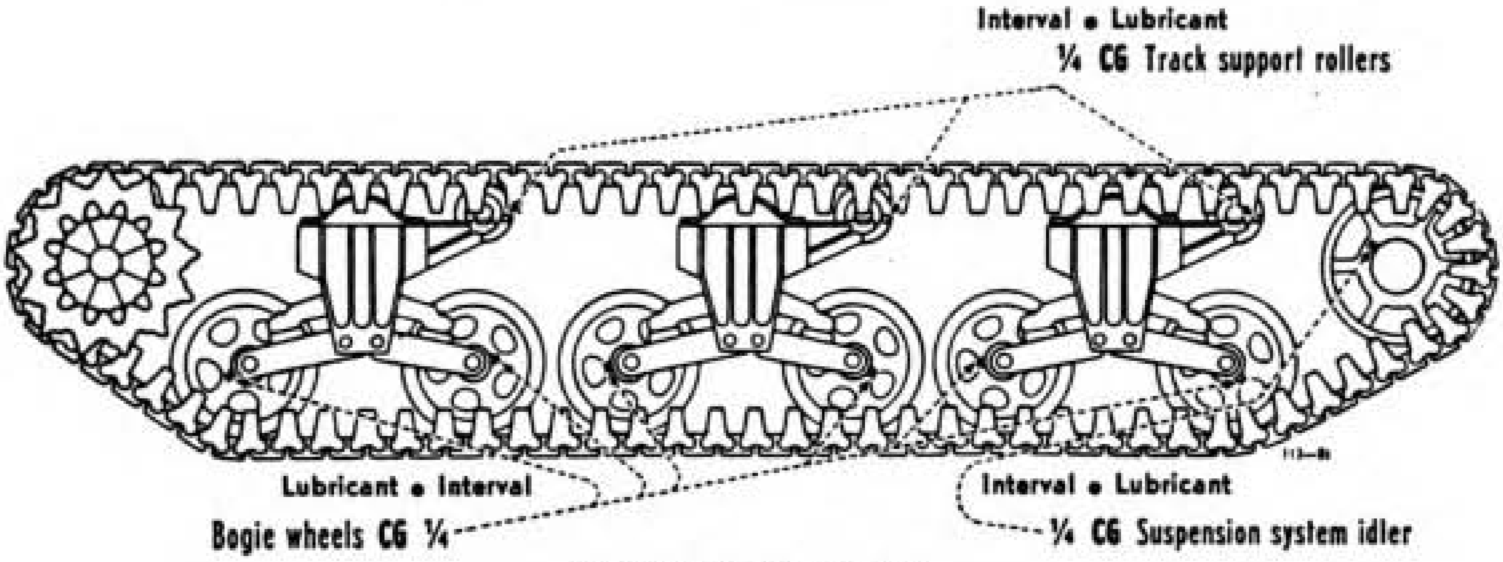

SUSPENSION SYSTEM

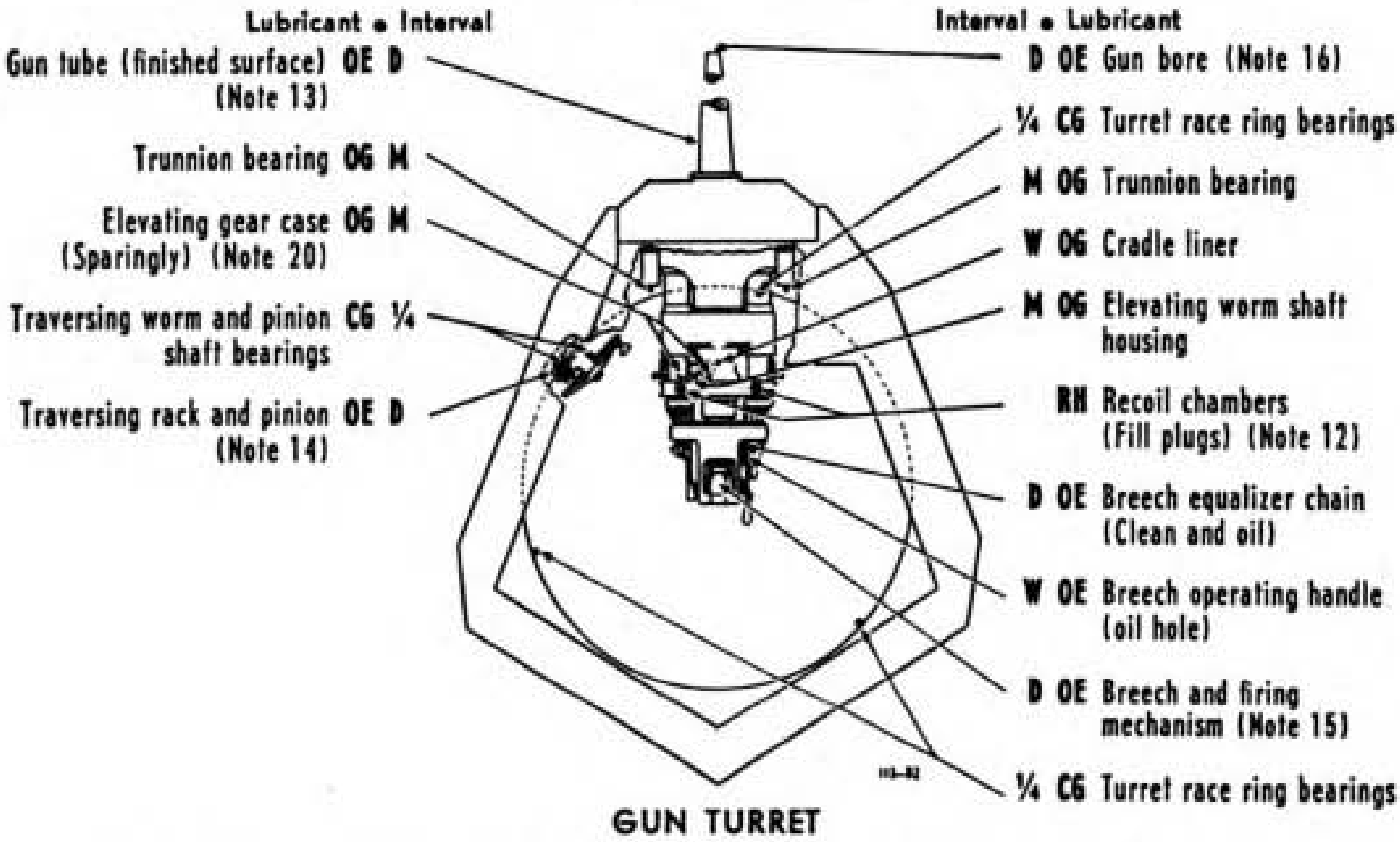

GUN TURRET

NOTE—See page 2 for lubrication of ENGINE COMPARTMENT, FINAL DRIVE, and FIGHTING COMPARTMENT points.

—KEY—

LUBRICANTS

CG—GREASE, general purpose
No. 1 (above +32° F.)
No. 0 (+32° F. to 0° F.)

OE—OIL, engine
SAE 30 (above +32° F.)
SAE 10 (below +32° F.)

RH—OIL, recoil, heavy

OG—GREASE, O.D.
No. 0 (above +32° F.)
No. 00 (below +32° F.)

INTERVALS

¼—250 MILES
D—DAILY
W—WEEKLY
M—MONTHLY

RA PD 36297

Figure 31—Lubrication Guide

(4) ENGINE LUBRICATING OIL TANKS. Daily, with engine running, check oil level with testing gage on instrument panel in driver's compartment; add oil if necessary. Drain only when engine is hot. Every 500 miles or 50 hours, drain and refill. To completely drain each lubricating system, remove both crankcase drain plugs and oil tank drain plug. Refill oil tank to "FULL" mark on gage.

(5) LUBRICATING OIL FILTERS. At each oil change, remove filter cover, drain plug, and filter element. Wash out filter base. Install new filter element, replace drain plug and filter cover, using new cover gasket. Start engine, and check for oil leaks. Refill oil tank to "FULL" mark on gage while engine is running.

(6) LUBRICATING OIL STRAINERS. Every 500 miles or 50 hours, drain strainer through drain plug; remove, clean and reinstall strainer element.

(7) GEAR CASES (TRANSMISSION, DIFFERENTIAL AND FINAL DRIVES). The transmission, differential and final drives are combined in one unit. Fill through transmission filler to mark on bayonet gage with filler cap resting on top of filler pipe. Drain through transmission and final drive drain plug holes. Weekly, check level with vehicle on level ground; if necessary, add lubricant to correct level. Drain and refill as indicated at points on guide. When draining, drain immediately after operation. To completely drain system, also remove oil cooler drain plugs. Every 3,000 miles, clean transmission filler strainer. CAUTION: *Do not remove strainer when filling.* For correct lubrication of transfer case, check level every 500 miles or 50 hours. Add OIL, engine, SAE 30, until full. Every 6 months or at time of clutch overhaul, drain and refill with 2½ qt OIL, engine, SAE 30.

(8) CLUTCH PILOT BEARINGS. At time of disassembly of clutch for inspection, replacement or overhaul, clean and repack with ball and roller bearing grease.

(9) FUEL FILTERS. Daily, open primary and secondary fuel filter drain cocks to remove sediment and water.

(a) The primary fuel filters are mounted at ends of filter panel. Service every 100 hours or 1,000 miles, using following procedure:

1. Turn fuel tank selector valve to "OFF" position.

2. Back out retainer bolt at top and remove bowl and element.

3. Thoroughly wash disks in Diesel fuel. Do not scrape or use stiff brush.

4. Wash out bowl and fill with clean Diesel fuel.

5. Reassemble, using new element gasket and bowl gasket.

6. Turn fuel selector valve to "ON" position, start engine and check for leaks.

(b) The secondary fuel filters are mounted on side of engine. Service every 5,000 miles or 500 hours, using following procedure:

1. Turn fuel tank selector valve to "OFF" position.

2. Unscrew nut at bottom of bowl and drop bowl.

3. Inspect filter element, and clean inside of bowl.

4. Install new filter element. Reassemble, using new gaskets at top of collector tube and top and bottom of filter element.

5. Loosen filter outlet connection (turn fuel tank selector valve to "ON" position), lock out clutch and run other engine to fill filter bowl until fuel is forced out connection.

(10) UNIVERSAL JOINTS AND SLIP JOINT. To reach universal joints and slip joint, remove floor plate at rear and inspection plate at front of propeller shaft housing. To lubricate slip joint, remove plug and insert fitting. Apply GREASE, general purpose, seasonal grade, to universal joints until it overflows at relief valve, and to slip joint until lubricant is forced from end of spline. CAUTION: *After lubricating slip joint, remove fitting and replace plug.*

(11) CLUTCH SELECTOR LEVER SHAFT. Fittings reached through hole in left side of propeller shaft housing.

(12) RECOIL FLUID. Use OIL, recoil, heavy. Capacity of approximately 18⅜ pints, each cylinder. For instructions on handling of recoil fluid, refer to OFSB 6-6.

(13) GUN TUBE. Daily and before firing, clean and oil exposed finished metal surface. Keep surface covered with thin film of OIL, engine, seasonal grade.

(14) TRAVERSING RACK AND PINION. Daily, clean and apply OIL, engine, seasonal grade.

(15) BREECH AND FIRING MECHANISM. Daily and before and after firing, clean and oil all moving parts and exposed metal surfaces with OIL, engine, seasonal grade. CAUTION: *To insure easy breech operation and to avoid misfiring in cold weather, clean with dry-cleaning solvent, dry and lubricate with OIL, lubricating, preservative, light.* To clean firing mechanism, remove and operate pin in dry-cleaning solvent.

(16) GUN BORE. Daily and after firing, clean and coat with OIL, engine, seasonal grade.

(17) OILCAN POINTS.

(a) Motor Carriage. Every 250 miles, lubricate door hinges, door latches, lever bushings, control rod pins, clevises, clutch and throttle pedals and control shaft bearings; gearshift lever links and pins; steering brake levers, shaft and links, seat slides, supports, control levers and pins; periscope holder pivots, hull drain valves and controls, etc., with OIL, engine, SAE 30.

(b) Gun Mount. Weekly, lubricate handwheel handles, firing button, firing lever link, firing and ejector mechanism, etc., with OIL, engine, seasonal grade.

(18) Points to Be Lubricated When Engine Is Removed for Inspection or Overhaul.

(a) Starters. Apply OIL, engine, seasonal grade, through 3 oilers. Outboard oiler is reached through hole in flywheel housing.

(b) Clutch Shifter Shaft Bearings. Wash in Diesel fuel, dry and repack with GREASE, general purpose, No. 1. Install bearings and shaft and pack grease channels full before installing grease channel pipe plug to force additional grease into bearings.

(19) Points Requiring No Lubrication Service. Water pumps, fan drives, bogie wheel suspension linkage and slides, final drive sprocket bearings, elevating worm shaft upper bearing, elevating gear case shaft bearings, elevating gear case handwheel shaft bearings.

(20) Points to Be Serviced and/or Lubricated by Ordnance Maintenance Personnel. Every 6 months, disassemble, clean and recoat elevating gear case and breech operating shaft bearings with GREASE, O.D., seasonal grade.

Section VIII

TOOLS AND EQUIPMENT STOWAGE ON THE VEHICLE

32. TOOLS AND EQUIPMENT STOWAGE ON THE VEHICLE.

a. Each 3-inch gun motor carriage carries a set of pioneer tools, vehicle and gun tools, vehicle and gun equipment and vehicle and gun spare parts for use by the crew and for which the crew is responsible. Expended items must be replaced at the After-operation Service (par. 25).

b. The following lists show the federal stock number, manufacturer's number, and location of the various items. These lists are prepared from data available at the time of publication. For current list, see On Vehicle Materiel List furnished with each vehicle.

33. VEHICLE TOOLS.

Tool	Number Carried	Where Carried
AX, chopping, single bit, 5-lb	1	Bracket on rear plate
CHISEL, cold, ¾-in.	1	Tool bag
CROSSBAR, 8-in. (for flexible handle)	1	Tool bag
CROWBAR, 5-ft long, pinch point	1	Bracket on rear plate
CUTTER, wire M1938 w/carrier (per 2 vehicles)	1	Tool box under subfloor
EXTENSION, ½-in. sq drive, 10-in.	1	Tool bag
EXTENSION, handy grip, ½-in. sq drive, 5-in. long	1	Tool bag
FILE, hand, smooth, 8-in.	1	Tool bag
FILE, 3 sq, smooth, 6-in.	1	Tool bag
FIXTURE, set, track connecting	1	Tool bag
GUN, lubrication, pressure (hand operated)	1	Tool bag

3-INCH GUN MOTOR CARRIAGE M10

Tool	Number Carried	Where Carried
HAMMER, machinist's, ball peen, 32-oz	1	Tool bag
HANDLE, combination tee, ½-in. sq drive, 11-in.	1	Tool bag
HANDLE, combination tee, ¾-in. sq drive, 17-in.	1	Tool bag
HANDLE, flexible, ½-in. sq drive, 12-in.	1	Tool bag
HANDLE, mattock	1	Bracket on rear plate
HANDLE, speeder, ½-in. sq drive, 17-in.	1	Tool bag
JOINT, universal, ½-in. sq drive	1	Tool bag
MATTOCK, pick M1, without handle	1	Bracket on rear plate
PLIERS, combination, slip joint, 8-in.	1	Tool bag
PLIERS, side-cutting, 8-in.	1	Tool bag
RATCHET, reversible, ½-in. sq drive, 9-in.	1	Tool bag
SCREWDRIVER, machinist's, 5-in. blade	1	Tool bag
SCREWDRIVER, special purpose, 1¾-in. blade	1	Tool bag
SCREWDRIVER, special purpose, 1½-in. blade	1	Tool bag
SHOVEL, short-handled	1	Bracket on rear plate
SLEDGE, blacksmith, dble-face, 10-lb	1	Bracket on rear plate
WRENCH, adjustable, single-end, 8-in.	1	Tool bag
WRENCH, adjustable, single-end, 12-in.	1	Tool bag
WRENCH, engineer, double head, open-end, $\frac{5}{16}$ x ⅜-in.	1	Tool bag
WRENCH, engineer, double head, open-end, $\frac{7}{16}$ x ½-in.	1	Tool bag
WRENCH, engineer, double head, open-end, $\frac{9}{16}$ x $\frac{11}{16}$-in.	1	Tool bag
WRENCH, engineer, double head, open-end, ⅝ x ¾-in.	1	Tool bag
WRENCH, engineer, double head, open-end, $\frac{13}{16}$ x ⅞-in.	1	Tool bag
WRENCH, engineer, double head, open-end, $\frac{15}{16}$ x 1-in.	1	Tool bag
WRENCH, plug, $\frac{9}{16}$-in. hexagon, for transmission and oil drain plugs	1	Tool bag

TOOLS AND EQUIPMENT STOWAGE ON THE VEHICLE

Tool	Number Carried	Where Carried
WRENCH, plug, ¾-in. hexagon, for differential filler and drain plugs	1	Tool bag
WRENCH, socket, ½-in. sq drive, ⅜-in. square	1	Tool bag
WRENCH, socket, ½-in. sq drive, 7/16-in. hexagon	1	Tool bag
WRENCH, socket, ½-in. sq drive, ½-in. hexagon	1	Tool bag
WRENCH, socket, ½-in. sq drive, 9/16-in. hexagon	1	Tool bag
WRENCH, socket, ½-in. sq drive, ⅝-in. hexagon	1	Tool bag
WRENCH, socket, ½-in. sq drive, ¾-in. hexagon	1	Tool bag
WRENCH, socket, ½-in. sq drive, ⅞-in. hexagon	2	Tool bag
WRENCH, socket, ½-in. sq drive, 15/16-in. hexagon	2	Tool bag
WRENCH, socket, ½-in. sq drive, 1-in. hexagon	1	Tool bag
WRENCH, socket, ½-in. sq drive, 1 1/16-in. hexagon	1	Tool bag
WRENCH, socket, ½-in. sq drive, 1⅛-in. hexagon	1	Tool bag
WRENCH, socket, ¾-in. sq drive, 1½-in. hexagon	1	Tool bag
WRENCH, socket head set screw, 3/32-in. hexagon	1	Tool bag
WRENCH, socket head set screw, ⅛-in. hexagon	1	Tool bag
WRENCH, socket head set screw, 3/16-in. hexagon	1	Tool bag
WRENCH, socket head set screw, ¼-in. hexagon	1	Tool bag
WRENCH, socket head set screw, 5/16-in. hexagon	1	Tool bag
WRENCH, socket head set screw, ⅜-in. hexagon	1	Tool bag
WRENCH, socket head set screw, ⅝-in. hexagon	1	Tool bag
WRENCH, track-adjusting	1	On rear deflector plate

34. VEHICLE EQUIPMENT.

Item	Number Carried	Where Carried
ANTENNA, complete, w/cover (spare)	1	Bracket on engine compartment bulkhead
APPARATUS, decontaminating, 1½-qt, M2, spec. 197-54-113	2	One at right front turret, one under R.R. compartment floor
BAG, canvas, field O.D. M1936	5	Strapped on outside of turret
BAG, instruction book	1	In bracket with books
BAG, tool, w/o contents	1	In tool box under right center fighting compartment floor door
BELT, safety	2	On driver's and assistant driver's seats
BINOCULAR, M3, complete, composed of: 1 binocular, M3; 1 case, carrying, M17	1	Bracket—left side of turret or in sponson to right of assistant driver
BOOK, motor, O.O. Form 7255	1	Instruction bag
BUCKET, canvas, folding, 18-qt	1	On 3-in. rear ammunition rack
CABLE, towing, 1⅛-in. x 20 ft	1	On upper hull
CANTEEN, M1910, w/cup and cover	5	2 on front plate, 3 in turret
CONTAINER, water, 5 gal QMC Standard A353	2	On brackets under subfloor
EXTINGUISHER, fire, CO_2, 4-lb	2	One in bracket at left of driver's seat. One in bracket at left of loader's seat
FLAG SET, M238 composed of: 1 case, CS-90; 1 flag, MC-273 (red); 1 flag, MC-274 (orange); 1 flag, MC-275 (green); 3 flagstaffs, MC-270	1	Bracket on left side of turret

TOOLS AND EQUIPMENT STOWAGE ON THE VEHICLE

Item	Number Carried	Where Carried
FLASHLIGHT, w/batteries	5	In brackets; 2—left of driver, 1—turret front, 1—right sponson, 1—left sponson
GROUSER (for track being used)	26	Upper hull side plates or bracket on rear of turret
HEAD (for periscope M6) (spare)	9	In boxes by assistant driver's seat
HOOD, hatch, driver's	1	
INTERPHONE-SYSTEM, RC-99	1	At each crew member's station
KIT, first aid (24 unit) (spec. 1553)	1	Bracket to left of driver
LAMP, elec., 24-28 V., 15 cp. (for inspection light)	1	Behind instrument panel
LIGHT, inspection	1	On bracket at left of driver
LUBRICATION GUIDE, War Department No. 113	1	In frame at left of driver's seat
MANUAL, technical, TM 9-752 (Operator's Manual)	1	Instruction bag
MANUAL, spare parts, illustrated (for vehicle)	1	Instruction bag
MANUAL, technical, GMC. TM 9-1750G	1	Instruction bag
MITTENS, asbestos, prs., 1 heavy, 1 medium	2	In gun tool box
NET, camouflage, cotton shrimp, 45 x 45 ft (spec. T-1669)	1	Strapped on outside of turret
OILER, trigger type, 1 pt.	1	On bracket under right front fighting compartment floor door
PAULIN, 12 x 12 ft.	1	Strapped to outside of turret
PERISCOPE, M6	3	In housings
PERISCOPE, M6 (spare)	3	In boxes by assistant driver's seat
PISTOL, pyrotechnic M2	1	In oddment tray
RADIO SET SCR 610 (per 2 vehicles)	1	Right front sponson by assistant driver's seat

3-INCH GUN MOTOR CARRIAGE M10

Item	Number Carried	Where Carried
RATIONS, 2 days, type "K," for 5 men	30	Ration box under right center fighting compartment floor door
RATIONS, 1 day's, type "D," for 5 men	2	Ration box under right center fighting compartment floor door
ROLL, blanket	5	Strapped to outside of turret
SIGNALS, pyrotechnic composed of: 6 red M11 6 green M15 6 white M16	18	16 in 2 cal. .30 M1 ammunition boxes on sponson right of assistant driver, 2 in oddment tray
STOVE, cooking, gasoline, M1941 (1 burner) consisting of: 1 Coleman military burner No. 520 with accessory cups	1	Under subfloor
STRAPS, canvas, 1½-in. wide x 50-in. long	4	On outside of turret
TAPE, adhesive, 4-in. wide, 15-yd roll	1	Tool box
TAPE, friction, ¾-in. wide, 30-ft roll	1	Tool box
TOP, canvas, assembly	1	In place on turret
TUBE, flexible nozzle	2	Tool box
WIRE, soft iron, 14-gage, 10-ft roll	1	Tool box

35. VEHICLE SPARE PARTS.

BUSHING, rubber, for elevating mechanism	4	Tool box
CONNECTOR, track, shoe end	12	Tool box
LAMP, 3 cp., 24-28 V.	4	Behind instrument panel
LINK, track shoe	6	On rear of turret
NUT, safety, ⅝-18NF-3	16	Tool box
PIN, cotter, split, S., (type B) ¼ x 2¼-in. (for tow shackle pin)	2	Tool box

TOOLS AND EQUIPMENT STOWAGE ON THE VEHICLE

Item	Number Carried	Where Carried
PIN, locking (for tow shackle pin)	2	Tool box
SOLENOID, firing	1	Tool box
SWITCH, firing	1	Tool box
WEDGE, track shoe end connection	12	Tool box

36. GUN TOOLS.

a. 3-inch Gun M7 Tools.

Tool	Number Carried	Where Carried
EYEBOLT, breechblock removing	1	Tool box
CLAMP	1	Tool box
GUN, lubricating oil	1	Tool box
HOSE, assembly	1	Tool box
MALLET, rawhide, 23 oz	1	Tool box
TOOL, breechblock removing	1	Tool box

b. Cal. .50 M2 HB Machine Gun Tools.

WRENCH, combination, cal. .50 M2	1	Tool box

37. GUN EQUIPMENT.

a. 3-inch Gun Equipment.

Item	Number Carried	Where Carried
BOOK, arty. gun, O.O. Form 5825	1	Instruction bag
BRUSH, bore, M15 w/staff consisting of: 1 brush, bore, M15; 1 staff, end; 1 staff, middle; 1 staff, end	1	Bracket on engine bulkhead
CAN, ¼ gal. (stencil "OIL, RECOIL" in black letters ½-in. high on can)	1	Bracket on tool box under right center door — fighting compartment floor
CASE, carrying, gunner's quadrant, M1	1	Bracket in turret

3-INCH GUN MOTOR CARRIAGE M10

Item	Number Carried	Where Carried
CASE, tube, sight, assembly M516	1	On tube sight
COVER, bore brush, M516	1	On bore brush
COVER, breech	1	On breech
COVER, muzzle	1	On gun muzzle
COVER, telescope (spare)		
MANUAL, technical, 3-in. gun M7	1	Instruction bag
QUADRANT, gunner, M1, w/case	1	Bracket in turret
RAMMER, cleaning and unloading, M3	1	Bracket on engine bulkhead
SETTER, fuse, M14	1	Tool box under subfloor
SIGHT, bore, complete consisting of: 1 sight bore, breech; 1 sight bore, muzzle	1	Tool box
TABLE, firing	1	Instruction bag
TARGET, testing (set of 4)	1	Tool box
TELESCOPE, M51	2	One on gun, spare under gun front of turret
TUBE, sight, assembly	1	In bracket under gun

b. Cal. .50 M2 HB Machine Gun Equipment.

Item	Number Carried	Where Carried
BAG, metallic belt link	1	Tool box under subfloor
BOX, ammunition, M2	10	Bracket under fighting compartment floor
BRUSH, cleaning, cal. .50, M4	4	Tool box under subfloor
CASE, cleaning rod, M15	1	Tool box under subfloor
CHUTE, metallic belt link, M1	1	Tool box under subfloor
COVER, gun and cradle, cal. .50	1	On gun
COVER, spare barrel, M13 (for 45-in. barrel)	1	On spare barrel in tool box
COVER, tripod mount M1	1	On tripod mount
ENVELOPE, spare parts, M1 w/o contents	1	Tool box under subfloor
EXTRACTOR, ruptured cartridge cal. .50	1	Tool box under subfloor

TOOLS AND EQUIPMENT STOWAGE ON THE VEHICLE

Item	Number Carried	Where Carried
MANUAL, field, for cal. .50 M.G. M2, FM 23-65	1	Instruction bag
MOUNT, tripod, cal. .50, M3	1	Bracket on left hull side plate
OILER, filling, oil buffer	1	Tool box under subfloor
ROD, cleaning, jointed, M7, cal. .50	1	Tool box under subfloor

38. GUN SPARE PARTS.

a. 3-inch Gun Spare Parts.

FORK, firing pin cocking	1	Tool box
GASKET, recoil cylinder plug	2	Tool box
MECHANISM, percussion assembly	1	Tool box
consisting of:		
1 guide		
1 pin, firing		
1 pin, straight, for firing pin guide		
1 spring, firing pin retracting		
1 stop, firing spring		
PIN, cotter, ⅛ x ⅞-in.	2	Tool box
PIN, firing	1	Tool box
PLUG, recoil cylinder	2	Tool box
PLUNGER, cocking lever	1	Tool box
RETAINER, sear	1	Tool box
SPRING, cocking fork plunger	1	Tool box
SPRING, firing	1	Tool box
SPRING, firing pin retracting	1	Tool box
SPRING, sear	1	Tool box

b. Cal. .50 M2 HB Machine Gun Spare Parts.

ARM, belt feed pawl	1	Tool box
BARREL, assembly	1	Tool box
DISK, buffer	1	Tool box
EXTENSION, firing pin, assembly	1	Tool box
EXTRACTOR, assembly	1	Tool box
LEVER, cocking	1	Tool box

Item	Number Carried	Where Carried
PAWL, feed belt, assembly...	1	Tool box
PIN, belt feed pawl, assembly	1	Tool box
PIN, cotter, split, S., 3/32 x 3/4-in. (belt feed lever pivot stud)	1	Tool box
PIN, cotter, split, S., 1/16 x 3/4-in. (switch pivot).........	2	Tool box
PIN, cotter, split, S., 1/8 x 5/8-in. (cover pin)	1	Tool box
PIN, firing	1	Tool box
PLUNGER, belt feed lever...	1	Tool box
ROD, driving spring w/spring, assembly	1	Tool box
SLIDE, feed belt assembly...	1	Tool box
SLIDE, sear	1	Tool box
SPRING, belt feed lever plunger	1	Tool box
SPRING, belt feed pawl.....	1	Tool box
SPRING, belt holding pawl..	1	Tool box
SPRING, cover extractor....	1	Tool box
SPRING, locking, barrel.....	1	Tool box
SPRING, sear	1	Tool box
STUD, bolt	1	Tool box

Section IX

MAINTENANCE ALLOCATION

39. SCOPE.

a. The scope of maintenance and repair by the crew and other units of the using arms is determined by the availability of suitable tools, availability of necessary parts, capabilities of the mechanics, time available, and the tactical situation. All of these are variable and no exact system of procedure can be prescribed.

40. ALLOCATION OF MAINTENANCE.

a. Indicated below are the maintenance duties for which tools and parts have been provided for the using arm and ordnance maintenance personnel. Replacements and repairs which are the responsibility of ordnance maintenance personnel may be performed by using arm personnel when circumstances permit, within the discretion of the commander concerned. Echelons and words as used in this list of maintenance allocations are defined as follows:

FIRST AND SECOND ECHELON: TABLE III AR 850-15	Operating organization driver, operator or crew, companies and detachments, battalions, squadrons, regiments, and separate companies and detachments (first and second echelons, respectively).
THIRD ECHELON: TABLE III AR 850-15	Technical light and medium maintenance units, including Post and Port Shops.
FOURTH ECHELON: TABLE III AR 850-15	Technical heavy maintenance and field depot units including designated post and service command shops.
FIFTH ECHELON: TABLE III AR 850-15	Technical base units.
SERVICE: (Including preventive maintenance) par. 24 **a** (2) and (3) in part. AR 850-15	Checking and replenishing fuel, oil, grease, water and antifreeze, air, and battery liquid; checking and tightening nuts and bolts; cleaning.

REPLACE: Par. 24 a (5) AR 850-15	To remove an unserviceable part, assembly, or subassembly from a vehicle and replace it with a serviceable one.
REPAIR: Par. 24 a (6) in part AR 850-15	To restore to a serviceable condition, such parts, assemblies or subassemblies as can be accomplished without completely disassembling the assembly or subassembly, and where heavy riveting, or precision machining, fitting, balancing, or alining is not required.
REBUILD: Par 24 a (6) AR 850-15	Consists of stripping and completely reconditioning and replacing in serviceable condition any vehicle or unserviceable part, subassembly, or assembly of the vehicle, including welding, riveting, machining, fitting, alining, balancing, assembling, and testing.
RECLAMATION: AR 850-15 Par. 4 *(c)* in part CIR. 75, dated 16 March '43	Salvage of serviceable or economically repairable units and parts removed from vehicles, and their return to stock. This includes the process which recovers and/or reclaims unusable articles or component parts thereof and places them in a serviceable condition.

NOTES: (1) Operations allocated will normally be performed in the echelon indicated by "X."

(2) *The second echelon is authorized to remove and reinstall items marked by an asterisk. However, when it is necessary to replace an item marked by an asterisk with a new or rebuilt part, subassembly or unit assembly, the assembly marked by an asterisk may be removed from the vehicle by the second echelon *only after authority has been obtained from a higher echelon of maintenance.*

(3) Operations allocated to the third echelon as indicated by "E" may be performed by these units in emergencies only.

(4) Operations allocated to the fourth echelon by "E" are normal fifth echelon operations. They will not be performed by the fourth echelon, unless the unit is expressly authorized to do so by the chief of the service concerned.

(5) Technical Bulletins of the 2850-series should be consulted for detailed information relative to reclamation procedure.

	ECHELONS			
BOXES AND RACKS, AMMUNITION	2nd	3rd	4th	5th
Boxes, ammunition—replace	X			
Boxes, ammunition—repair		X		
Racks, ammunition—replace	X			
Racks, ammunition—repair		X		

MAINTENANCE ALLOCATION

	ECHELONS			
CLUTCHES	2nd	3rd	4th	5th
Clutch assemblies—replace and/or repair		X		
Clutch assemblies—rebuild			E	X
Controls and linkage—service and/or replace	X			
Controls and linkage—repair		X		
COOLING GROUP				
Connections—replace	X			
Radiator assemblies—replace	X			
Radiator assemblies—repair		X		
Radiator assemblies—rebuild			E	X
System, cooling—service	X			
Tanks, surge—replace	X			
Tanks, surge—repair		X		
ELECTRICAL GROUP				
Batteries—service (recharge) and/or replace	X			
Batteries—repair		X		
Batteries—rebuild			E	X
Box, battery—replace	X			
Box, battery—repair		X		
Boxes, terminal—replace	X			
Boxes, terminal—repair		X		
Breakers, circuit—replace	X			
Breakers—circuit—repair		X		
Breakers, circuit—rebuild			X	
Cables, battery—replace	X			
Cables, battery—repair		X		
Conduit—replace	X			
Conduit—repair		X		
Filters—replace	X			
Filters—repair		X		
Lamp assemblies—service and/or replace	X			
Lamp assemblies—repair		X		
Regulator, current and voltage—replace	X			
Regulator, current and voltage—service and/or repair		X		
Regulator, current and voltage—rebuild			X	
Siren—replace	X			
Siren—repair		X		
Siren—rebuild			X	
Solenoids—replace	X			
Solenoids—repair		X		
Switches—replace	X			
Switches—repair		X		

	ECHELONS			
ELECTRICAL GROUP (Cont'd)	2nd	3rd	4th	5th
Switches—rebuild			X	
Wiring—replace	X			
Wiring—repair		X		
ENGINE (GMC TWIN DIESEL MODEL 6046)				
Bearings, connecting rod (inserts)—replace		E	E	X
Bearings, crankshaft (inserts)—replace		E	E	X
Block, cylinder—reclamation			E	X
Block and cylinder sleeve assemblies—rebuild (recondition)			E	X
Blower assemblies—replace and/or repair	X			
Blower assemblies—rebuild			E	X
Control assemblies, injector—replace	X			
Control assemblies, injector—repair		X		
Cooler, oil—replace	X			
Cooler, oil—repair		X		
Cooler, oil—rebuild			E	X
Crankshafts—rebuild (recondition)			E	X
Dampers, vibration—replace		X		
Drive assembly, tachometer—replace	X			
*Engine assembly (twin)—replace	*	X		
Engine assembly (twin)—repair		X		
Engine assembly (twin)—rebuild			E	X
Fan assemblies—replace	X			
Fan assemblies—repair		X		
Fan assemblies—rebuild			X	
Filters, oil—service and/or replace	X			
Filters, oil—repair		X		
Flywheels—replace and/or repair		X		
Flywheels—rebuild			E	X
Flywheels—reclamation			E	X
Gaskets, cylinder head and manifold—replace	X			
Gear trains, timing—replace		X		
Generator assemblies—replace	X			
Generator assemblies—repair		X		
Generator assemblies—rebuild			X	
Governor assemblies—adjust and/or replace	X			
Governor assemblies—rebuild			E	X

---

*The second echelon is authorized to remove and reinstall items marked by an asterisk. However, when it is necessary to replace an item marked by an asterisk with a new or rebuilt part, subassembly or unit assembly, the assembly marked by an asterisk may be removed from the vehicle by the second echelon *only after authority has been obtained from a higher echelon of maintenance.*

MAINTENANCE ALLOCATION

	ECHELONS			
ENGINE (Cont'd)	2nd	3rd	4th	5th
Head assemblies, cylinder—replace and/or repair	X			
Head assemblies, cylinder—rebuild			E	X
Heaters, air—service and/or replace	X			
Heaters, air—repair		X		
Injector assemblies—replace	X			
Injector assemblies—repair		X		
Injector assemblies—rebuild			E	X
Lines and connections, oil (external)—replace	X			
Lines and connections, oil (external)—repair		X		
Lines and connections, oil (internal)—replace and/or repair		X		
Manifold assemblies, fuel—replace	X			
Manifold assemblies, fuel—repair		X		
Manifolds, exhaust—replace	X			
Manifolds, exhaust—rebuild			X	
Motor assemblies, starting—replace	X			
Motor assemblies, starting—repair		X		
Motor assemblies, starting—rebuild			X	
Pan assemblies, oil—replace and/or repair		X		
Pistons and rings—replace		E	E	X
Pump assemblies, fuel—service and/or replace	X			
Pump assemblies, fuel—repair		X		
Pump assemblies, fuel—rebuild			E	X
Pump assemblies, oil—replace and/or repair		X		
Pump assemblies, oil—rebuild			E	X
Pump assemblies, water—service and/or replace	X			
Pump assemblies, water—repair		X		
Pump assemblies, water—rebuild			X	
Rods, connecting—replace		E	E	X
Rods, connecting—reclamation				X
Reservoirs, oil—replace	X			
Reservoirs, oil—repair		X		
Sleeves, cylinder—replace		E	E	X
Valve assemblies, oil cooler and strainer—service and/or replace	X			
Valve assemblies, oil cooler and strainer—rebuild			X	
Valve assemblies, pressure oil pump—service and/or replace		X		
Valve assemblies, pressure oil pump—rebuild				X
Valve assemblies, pressure regulator—replace and/or repair		X		
Valve assemblies, pressure regulator—rebuild			X	

	ECHELONS			
EXHAUST GROUP	2nd	3rd	4th	5th
Brackets—replace	X			
Mufflers and connections—replace	X			
EXTINGUISHER SYSTEM, FIRE				
Controls and linkage—service and/or replace	X			
Controls and linkage—repair		X		
Cylinders (carbon dioxide CO_2)—replace	X			
Cylinders (carbon dioxide CO_2)—service (recharge) and/or repair		X		
Extinguishers, fire (carbon dioxide CO_2)—replace	X			
Extinguishers, fire (carbon dioxide CO_2)—service (recharge) and/or repair		X		
Extinguishers, fire (carbon dioxide CO_2)—rebuild			E	X
Lines and nozzles—replace	X			
Lines and nozzles—repair		X		
FUEL GROUP				
Cleaners, air—service and/or replace	X			
Cleaners, air—repair		X		
Filters, fuel—service and/or replace	X			
Filters, fuel—repair		X		
Lines and connections—replace and/or repair	X			
Tanks, fuel—service and/or replace		X		
Tanks, fuel—repair		X		
Valves—replace	X			
Valves—rebuild			E	X
HULL				
Doors and cover plates—replace	X			
Doors and cover plates—repair		X		
Guards—replace	X			
Guards—repair		X		
Hull—repair		X		
Hull—rebuild			E	X
Periscopes—replace	X			
Periscopes—repair		X		
Periscopes—rebuild			E	X
Pintle assembly—replace	X			
Pintle assembly—repair		X		
Pintle assembly—rebuild			X	
Seats—replace	X			
Seats—repair		X		
Subfloor—replace and/or repair	X			

MAINTENANCE ALLOCATION

	ECHELONS			
INSTRUMENTS AND PANEL	2nd	3rd	4th	5th
Instruments—replace	X			
Instruments—repair		X		
Instruments—rebuild			E	X
Panel and connections—replace	X			
Panel and connections—repair		X		
POWER TRAIN (DIFFERENTIAL, FINAL DRIVES AND TRANSMISSION)				
Brake, parking—service and/or replace	X			
Brake, parking—repair (reline)		X		
Controls and linkage—service and/or replace	X			
Controls and linkage—repair		X		
Cooler, oil—replace	X			
Cooler, oil—repair		X		
Cooler, oil—rebuild			E	X
*Differential assembly—replace	*	X		
Differential assembly—repair		X		
Differential assembly—rebuild			E	X
*Drive assemblies, final—replace	*	X		
Drive assemblies, final—repair		X		
Drive assemblies, final—rebuild			E	X
Drive assemblies, final—reclamation			E	X
Drum, brake—replace		X		
Drum, brake—rebuild (recondition)			E	X
Hubs, sprocket—replace	X			
Hubs, sprocket—repair		X		
Hubs, sprocket—rebuild			E	X
Lines and connections, oil—replace and/or repair	X			
*Power train assembly—replace	*	X		
Power train assembly—repair		X		
Power train assembly—rebuild			E	X
Shoe assemblies, steering brake—service and/or replace	X			
Shoe assemblies, steering brake—repair (reline)		X		
Sprockets—replace	X			
Sprockets—rebuild (recondition)			E	X
Sprockets—reclamation				X

---

*The second echelon is authorized to remove and reinstall items marked by an asterisk. However, when it is necessary to replace an item marked by an asterisk with a new or rebuilt part, subassembly or unit assembly, the assembly marked by an asterisk may be removed from the vehicle by the second echelon *only after authority has been obtained from a higher echelon of maintenance.*

3-INCH GUN MOTOR CARRIAGE M10

	ECHELONS			
POWER TRAIN (Cont'd)	2nd	3rd	4th	5th
*Transmission assembly—replace	*	X		
Transmission assembly—repair		X		
Transmission assembly—rebuild			E	X
Transmission assembly—reclamation			E	X
SHAFT, PROPELLER				
Shaft assembly, propeller (w/universal joints)—replace	X			
Shaft assembly, propeller (w/universal joints)—repair		X		
Shaft assembly, propeller (w/universal joints)—rebuild			E	X
TRACK SUSPENSION GROUP				
Bogie components—replace	X			
Bogie components—repair		X		
Bogie components—rebuild			E	X
Bogie components—reclamation			E	X
Idler components—replace	X			
Idler components—repair		X		
Idler components—rebuild			E	X
Idler components—reclamation			E	X
Roller assemblies, track supporting—replace	X			
Roller assemblies, track supporting—repair		X		
Roller assemblies, track supporting—rebuild			E	X
Roller assemblies, track supporting—reclamation			E	X
Track assembly—replace and/or repair	X			
Track assembly—rebuild			E	X
Track assembly—reclamation			E	X
TRANSFER GEAR GROUP				
Transfer components—replace and/or repair	X			
Transfer components—rebuild			E	X
Transfer components—reclamation			E	X
TURRET ASSEMBLY				
Lock, turret—replace	X			
Lock, turret—repair		X		
Lock, turret—reclamation			E	X

---

*The second echelon is authorized to remove and reinstall items marked by an asterisk. However, when it is necessary to replace an item marked by an asterisk with a new or rebuilt part, subassembly or unit assembly, the assembly marked by an asterisk may be removed from the vehicle by the second echelon *only after authority has been obtained from a higher echelon of maintenance.*

MAINTENANCE ALLOCATION

	ECHELONS			
TURRET ASSEMBLY (Cont'd)	2nd	3rd	4th	5th
Mechanism, turret traversing—replace	X			
Mechanism, turret traversing—repair		X		
Mechanism, turret traversing—rebuild			E	X
Mechanism, turret traversing—reclamation			E	X
Ring, turret—replace		X		
Turret assembly—replace and/or repair		X		
Turret assembly—rebuild			E	X
VEHICLE ASSEMBLY				
Vehicle assembly—service	X			
Vehicle assembly—rebuild (with serviceable unit assemblies)			X	E

Section X

SECOND ECHELON PREVENTIVE MAINTENANCE SERVICE

41. SECOND ECHELON PREVENTIVE MAINTENANCE SERVICE.

a. Regular scheduled maintenance inspections and services are a preventive maintenance function of the using arm, and are the responsibility of commanders of operating organizations.

(1) Frequency. The frequencies of the preventive maintenance services outlined herein are considered a minimum requirement for normal operation of vehicles. Under unusual operating conditions such as extreme temperatures, dusty or sandy terrain, it may be necessary to perform certain maintenance services more frequently.

(2) First Echelon Participation. The drivers should accompany their vehicles and assist the mechanics while periodic second echelon preventive maintenance services are performed. Ordinarily the driver should present the vehicle for a scheduled preventive maintenance service in a reasonably clean condition; that is, it should be dry and not caked with mud or grease to such an extent that inspection and servicing will be seriously hampered. However, the vehicle should not be washed or wiped thoroughly clean, since certain types of defects, such as cracks, leaks, and loose or shifted parts or assemblies are more evident if the surfaces are slightly soiled or dusty.

(3) If instructions other than those contained in the general procedures in step (4) or the specific procedures in step (5) which follow, are required for the correct performance of a preventive maintenance service or for correction of a deficiency, other sections of the vehicle Operator's Manual pertaining to the item involved, or a designated individual in authority, should be consulted.

(4) General Procedures. These general procedures are basic instructions which are to be followed when performing the services on the items listed in the specific procedures. NOTE: *The second echelon personnel must be thoroughly trained in these procedures so that they will apply them automatically.*

(a) When new or overhauled subassemblies are installed to correct deficiencies, care should be taken to see that they are clean, correctly installed, properly lubricated, and adjusted.

(b) When installing new lubricant retainer seals, a coating of the lubricant should be wiped over the sealing surface of the lip of

the seal. When the new seal is a leather seal, it should be soaked in SAE 10 engine oil (warm, if practicable) for at least 30 minutes. Then, the leather lip should be worked carefully by hand before installing the seal. The lip must not be scratched or marred.

(c) The general inspection of each item applies also to any supporting member or connection, and usually includes a check to see whether the item is in good condition, correctly assembled, secure, or excessively worn. The mechanics must be thoroughly trained in the following explanations of these terms.

1. The inspection for "good condition" is usually an external visual inspection to determine whether the unit is damaged beyond safe or serviceable limits. The term "good condition" is explained further by the following: not bent or twisted, not chafed or burned, not broken or cracked, not bare or frayed, not dented or collapsed, not torn or cut.

2. The inspection of a unit to see that it is "correctly assembled" is usually an external visual inspection to see whether it is in its "normal assembled" position in the vehicle.

3. The inspection of a unit to determine if it is "secure" is usually an external visual examination, a hand feel, or a pry-bar check for looseness. Such an inspection should include any brackets, lock washers, lock nuts, locking wires, or cotter pins used in assembly.

4. "Excessively worn" will be understood to mean worn, close to or beyond serviceable limits, and likely to result in a failure if not replaced before the next scheduled inspection.

(d) Special Services. Special services are indicated by repeating the item numbers in the columns which show the interval at which the services are to be performed, and show that the parts or assemblies are to receive certain mandatory services. For example, an item number in one or both columns opposite a procedure, means that the actual tightening of the object must be performed. The special services include the following:

1. Adjust. Make all necessary adjustments in accordance with the pertinent section of the vehicle operator's manual, special bulletins, or other current directives.

2. Clean. Clean units of the vehicle with dry-cleaning solvent to remove excess lubricant, dirt, and other foreign material. After the parts are cleaned, rinse them in clean fluid and dry them thoroughly. Take care to keep the parts clean until reassembled, and be certain to keep cleaning fluid away from rubber or other material which it will damage. Clean the protective grease coating from new parts, since this material is not a good lubricant.

3. Special lubrication. This applies either to lubrication operations that do not appear on the vehicle lubrication chart or to items that do appear on such charts but should be performed in connection with the maintenance operations if parts have to be disassembled for inspection or service.

4. Serve. This usually consists of performing special operations, such as replenishing battery water, draining and refilling units with oil, and changing the oil filter cartridge.

5. Tighten. All tightening operations should be performed with sufficient wrench-torque (force on the wrench handle) to tighten the unit according to good mechanical practice. Use torque-indicating wrench where specified. Do not overtighten, as this may strip threads or cause distortion. Tightening will always be understood to include the correct installation of lock washers, lock nuts, and cotter pins provided to secure the tightening.

(e) When conditions make it difficult to perform the complete preventive maintenance procedures at one time, they can sometimes be handled in sections, planning to complete all operations within the week, if possible. All available time at halts and in bivouac areas must be utilized if necessary to assure that maintenance operations are completed. When limited by the tactical situation, items with Special Services in the columns should be given first consideration.

(f) The numbers of the preventive maintenance procedures that follow are identical with those outlined on WD AGO Form No. 462, which is the "Preventive Maintenance Service Work Sheet for Full Track and Tank-like Wheeled Vehicles." Certain items on the work sheet that do not apply to this vehicle are not included in the procedures in this manual. In general, the numerical sequence of items on the work sheet is followed in the manual procedures, but in some instances there is deviation for conservation of the mechanic's time and effort.

(5) SPECIFIC PROCEDURES. The procedures for performing each item in the 50-hour (500 mile) and 100-hour (1,000 mile) maintenance procedures are described in the following chart. Each page of the chart has two columns at its left edge corresponding to the 100-hour and the 50-hour maintenance respectively. Very often it will be found that a particular procedure does not apply to both scheduled maintenances. In order to determine which procedure to follow, look down the column corresponding to the maintenance due, and wherever an item number appears, perform the operations indicated opposite the number.

SECOND ECHELON PREVENTIVE MAINTENANCE SERVICE

ROAD TEST

MAINTENANCE		
100-Hour	50-Hour	
		NOTE: If the tactical situation does not permit a full road test, perform items 2, 3, 5, 6, 9, 12, 13 and 15 which require slight or no movement of the vehicle. When a road test is possible it should be for preferably three miles but not over five miles.
1	1	**Before-operation Inspection.** Before vehicle is road tested, perform those Before-operation Inspections (par. 26 b) necessary to determine whether the vehicle is in satisfactory condition to be road tested.
2	2	**Instruments and Gages.** OIL PRESSURE GAGES. Oil pressure gages for both engines must read 4 to 5 pounds within 30 seconds after engine is started and 35 to 50 pounds at 1,500 to 2,100 revolutions per minute. Stop engine immediately when red indicator light comes on above 1,000 revolutions per minute. AMMETER. Ammeter will show a high charging rate for first few minutes. A high charging rate for extended period with all electrical units turned off indicates a discharged battery or faulty regulator. VOLTMETER. Voltmeter must not read more than 30 volts with properly operating regulator. SPEEDOMETER AND ODOMETER. Speedometer must register correct speed without unusual noise and odometer must show accumulated mileage. TACHOMETERS. Tachometers must correctly register engine speeds and accumulated crankshaft revolutions. Engine speeds must not vary more than 100 revolutions per minute with both clutches engaged. ENGINE TEMPERATURE GAGES. Engine temperature gages should not exceed 225°F or fall below 150°F, nor should they vary more than 20°F. TRANSMISSION OIL TEMPERATURE GAGE. Transmission oil temperature gage should not exceed 300°F. FUEL AND OIL GAGE. Fuel and oil gage must register approximate amount of fuel and oil in tanks. CLOCK. Clock must be wound, running, and indicate correct time.
3	3	**Siren.** Sound siren for proper tone, if tactical situation permits.
5	5	**Brakes.** Apply both steering brakes at slow speed to test effectiveness. Free travel must be 8 to 10 inches. Test

MAINTENANCE		
100-Hour	50-Hour	
		each brake for effective steering with moderate application.
		Parking Brake. Stop vehicle, and apply parking brake. When steering levers are used as parking brake, pedal lock must securely hold levers in applied position and release freely. When transmission parking brake is used, lever must move freely and remain locked in fully applied position.
6	6	**Clutches.** Clutch pedal free travel should be two inches. Clutches must fully release and must not slip or chatter. The two tachometer readings must not vary more than 200 revolutions per minute during clutch engagement after shifting gears. Listen for noisy release bearings.
7	7	**Transmission.** Shift lever through entire gear range. Lever and safety button must operate freely; gears must shift smoothly, operate quietly, and not slip out of mesh. Note any unusual noise, clashing, or hard shifting.
9	9	**Engines.** Stop engines. Start one engine at a time with clutches locked out. Each engine must run smoothly and quietly at idle speed of 400 to 450 revolutions per minute. Gradually increase speed to maximum no-load governed speed of 2,250 revolutions per minute, noting any misfiring, detonation, unusual noises, or excessive smoking. Engine speeds must be balanced within 200 revolutions per minute, from 1,200 to 2,100 revolutions per minute. Drive vehicle a short distance with one engine at a time to make comparative test of power and acceleration.
10	10	**Unusual Noise.** During road test, listen for any unusual noise or vibration that would indicate loose, worn, or defective units, or lack of lubrication.
11	11	**Temperatures.** Stop vehicle; feel bogie wheel and roller, and idler wheel bearings for overheating.
12	12	**Gun Elevating and Traversing Mechanism.** Release turret locks and gun traveling lock. Traverse turret full 360 degrees in both directions. Mechanism and turret must turn freely and operate smoothly without binding or excessive play. Elevate and depress gun. Mechanism and mount must operate freely without binding or excessive play throughout entire travel. Test both manual and electrical firing controls for proper operation. Secure gun traveling lock and turret locks.
13	13	**Leaks.** Stop vehicle with engines running and thoroughly examine bottom of hull and ground under vehicle for

MAINTENANCE		
100-Hour	50-Hour	
		evidence of any leaks. Inspect hull and engine compartment for fuel, oil, or water leaks.
15	15	**Track Tension.** Track must not bind nor whip. Proper tension is not more than ¾-inch sag and not less than ½-inch sag measured between second and third support rollers.
		MAINTENANCE OPERATIONS
17	17	**Crankcase.** Stop engines and open battery master switch. Remove engine compartment floor plates. Inspect oil pans, engines, and connections for leaks. Drain oil pans and oil tanks. Clean oil strainer screens. Refill both oil tanks. See paragraph 58.
54	54	**Engine Oil Filters.** Inspect engine oil filters and lines for loose mounting bolts, leaks, and loose connections. Thoroughly clean housing, install new filter elements, and cover gaskets.
18	18	**Side Armor.** Examine front, rear, and side armor and plates for fractures or damage that would render vehicle unsafe for combat duty. Inspect towing shackles, lifting eyes, and pintle hook. Make sure pintle hook latch operates freely, and lock pin is attached to chain. Inspect fenders, exhaust deflector, and light guards, for bent or damaged condition. Identification markings must be visible. Paint and camouflage must meet the requirements of the tactical situation. Tighten loose mountings and straighten bent parts. Lubricate towing shackles, pintle hook, and latch.
19	19	**Bottom Armor.** Examine bottom of hull to determine whether it is in serviceable condition. Examine all inspection plates, drain valves, covers, and plugs to make sure they are properly sealed and securely mounted. Release escape hatch. Must operate freely and lock securely. Tighten all plates, covers, and plugs securely. Lubricate escape hatch lock mechanism.
20	20	**Differential and Final Drives.** Examine housings for fractures, leaks, or loose attaching bolts. Drain differential and/or final drive housings when transmission oil is to be changed. See Item 78.
20		TIGHTEN. Tighten all mounting and attaching bolts securely.
21	21	**Tracks.** Examine tracks for loose, worn or missing connections and wedges; also worn, damaged, or dead links.

MAINTENANCE		
100-Hour	50-Hour	
		Inspect tracks for proper tension. Tighten all wedge nuts securely. Reverse excessively worn rubber track links when possible. Replace unserviceable links, connectors, or wedges. Adjust track so that it is not too tight and does not sag more than ¾-inch between second and third support rollers.
21		Remove track on each third hundred-hour maintenance service (par. 148). Thoroughly inspect all parts covered in Items 21, 22, 23, 24 and 25.
22	22	**Idlers.** Examine bracket for fracture or loose or missing attaching bolts. Spindle clamp and locking collar must be securely locked. Inspect idler wheel for damage, bearing or bearing seal failure, missing lubrication fittings or loose bearing cap. Tighten all attaching bolts, spindle clamp bolts, bearing cap bolts and locking collar.
22		BEARINGS. Bearings must be thoroughly tested for failure, or excessive wear or looseness, by using pry bar on wheel when track is removed at every third 100-hour preventive maintenance service.
23	23	**Bogies.** Examine bogie bracket for fractures or loose mounting. Inspect bogie arms, levers, gudgeons, spring seats, and rubbing plates for fractures, excessive wear, or looseness. Volute springs are unserviceable if two or more coils contact lower spring seat.
23		TIGHTEN. Tighten all assembly and mounting bolts securely.
24	24	**Bogie Wheels and Rollers.** Inspect bogie wheels for broken hubs, grease leaks, and missing lubrication fittings. Inspect rollers for loose mountings, breaks, or missing lubrication fittings. Inspect track skids for loose mountings or excessive wear. Examine all bogie wheel tires for scoring, excessive wear, or blowouts.
24		TEST. Raise bogie wheels, using bogie lift (par. 159 **b**). Rotate wheel to detect worn, broken, or inadequately lubricated bearings, and test for end play. Track must be connected when making this test. Raise tracks free of support rollers. Rotate rollers to detect worn, broken or inadequately lubricated bearings, and test for end play. Make this test before track is connected at each third 100-hour preventive maintenance service. Tighten all assembly and mounting bolts securely.
25	25	**Sprockets.** Examine sprocket for fractures, excessively worn or broken teeth or loose attaching bolts. Inspect

SECOND ECHELON PREVENTIVE MAINTENANCE SERVICE

MAINTENANCE		
100-Hour	50-Hour	
		hub for grease leaks, loose attaching bolts, or fractures. Tighten all attaching bolts securely.
25		TEST. Remove track at each third 100-hour preventive maintenance service (par. 152). Test track drive sprocket shaft bearings for excessive wear, end play, or failure, by working hub with pry bar. Reverse or replace worn or damaged sprockets.
27	27	**Top Armor.** Examine all top hull and turret armor for fractures or damage that would render vehicle unsafe for combat duty. All doors, grilles, and hatches must open freely and lock securely.
28	28	**Filler Covers and Caps.** All filler cap covers must open and close freely and have lock pin attached to chain. Examine all filler caps for crossed threads, leaking gaskets, or plugged vents.
30	30	**Engine Removal.** When condition indicates engine is no longer serviceable and specific orders are given by a higher echelon, the engine may be removed according to procedure given in paragraph 79 to paragraph 80.
43	43	**Air Cleaners.** Remove air cleaners and disassemble. Inspect all gaskets and seals for serviceability and bodies for evidence of leaks. Clean elements and thoroughly dry. Clean oil reservoir and refill with seasonal grade engine oil to "FULL" mark on body. Do not overfill.
46	46	**Cylinder Heads and Gaskets.** Examine cylinder heads for cracks, oil, water, or compression leaks around studs or gaskets. Check auxiliary water tanks for evidence of contamination due to exhaust leaks. Cylinder heads will not be tightened unless there is definite evidence of looseness or leaks. Tighten cylinder heads or replace gaskets as needed.
31	31	**Exhaust Valve Mechanism.** Warm up engines to 150°F. Remove rocker arm cover. Inspect rocker arms and shafts for excessive wear, and valve springs for breakage. Observe all rocker arms and push rods to determine proper flow of oil to all moving parts. Inspect cover gasket for serviceability. Adjust valves (par. 83 c) using feeler gage to set clearance to 0.011 inch "GO" and 0.013 inch "NO GO."
33		**Engine Compression and Fuel Injectors.** Remove one injector at a time (par. 68 d), and install compression gage (par. 84 b). Test engine compression in each cylinder. Readings for all six cylinders must not vary more than

MAINTENANCE		
100-Hour	50-Hour	
		25 pounds. Record readings in space provided on War Department Form No. 426. Inspect injectors for enlarged holes. Test injector in vice jaws with popping tool for spray, leaks, or clogged holes. Install new injectors if required. Time all injectors, using timing gage (par. 68 **c**), and balance injector rack setting (par. 68 **g**). Start engines and make sure all fuel connections are tight (par. 46 **b** (2)).
34	34	**Generators and Starting Motors.** Examine generators and starting motors for loose mounting bolts or loose electrical connections.
34		SERVICE. Remove generator cover band and inspect for worn brushes, brush spring tension, dirty or scored commutator. Clean commutator if required. Tighten all mounting bolts and electrical connections.
45	45	**Manifolds.** Examine exhaust manifolds, inlet housing and blowers for loose mounting bolts or gasket leaks. Operate emergency stop buttons to make sure solenoids and engine shut-down valves operate freely. Replace gaskets and tighten mounting bolts as needed.
49	49	**Water Pumps, Fans, and Shrouds.** Examine water pumps, shaft seals, gaskets and connections for loose mounting bolts and leaks. Inspect fans and shrouds for alinement and loose attaching bolts. Tighten bolts, and replace gaskets as needed.
52	52	**Engine Oil Tanks and Coolers.** Make sure tanks, filler necks, lines, and connections are tight and securely mounted. Inspect for leaks (par. 46 **b** (2)). Examine oil coolers for loose mounting bolts and leaks. A defective oil cooler core is indicated by presence of oil in cooling system.
53	53	**Fuel Tanks and Pumps.** Make sure fuel tanks, valves, lines, tubes, and connections are tight and securely mounted. Inspect for leaks. Examine fuel pumps for loose mountings or leaking gaskets. Replace gaskets and tighten as necessary.
53		DRAIN. Drain upper and lower fuel tanks, to remove any sediment or water (par. 93 **d**).
55	55	**Fuel Filters.** Inspect primary and secondary fuel filters for loose mountings and leaks (par. 46 **b** (2)). Clean primary filter element and prime system (par. 95 **b**). Replace gaskets, and tighten loose mountings and connections as required.
57	57	**Exhaust Pipes and Mufflers.** Inspect exhaust pipes and mufflers to see that all connections are tight, that

MAINTENANCE		
100-Hour	50-Hour	
		there are no leaks. Also, observe that supports and units are securely mounted, and muffler ports unobstructed.
58	58	**Engine Mountings.** Inspect all engine mountings for looseness and tighten if required.
48	48	**Clutch and Engine Transfer Gear Case.** Examine clutch and transfer gear cases for loose mountings or leaking gaskets and seals. Add SAE 30 engine oil to transfer gear cases, filling to level of filler opening.
51	51	**Engine Compartment.** Inspect engine compartment and all controls and linkage, making sure they are clean and in serviceable condition.
51		CLEAN. Clean engine compartment thoroughly and when engines are removed, repaint if necessary.
60	60	**Fixed Fire Extinguisher System.** Examine all lines, connections, nozzles, and controls to see that they are tight and securely mounted. Nozzles must be intact and free of obstructions. Cylinders must be removed and weighed (par. 225 **b**) to make sure they are fully charged. Operate remote controls, with cylinders removed, to see that they have sufficient travel and work freely. Lubricate pulleys, cables, and mechanism, as needed. Install fully charged cylinders.
61	61	**Engine Installation.** When engines are removed at specific order given by a higher echelon they must be installed according to procedures given in paragraph 79 through paragraph 80. Make certain all fuel, oil, and water lines and various controls, are securely tightened, and water and oil tanks are filled before starting engines.
62	62	**Radiators.** Examine all mountings, water tubes, hoses and connections to see that they are tight and securely mounted. Examine all tanks, valves, drain plugs, and radiator cores to make sure there are no leaks. Examine water for contamination, rust, or scale. Remove all accumulated dirt from radiator cooling surfaces. Test antifreeze to make sure protection is adequate for prevailing temperatures (par. 18 **a**) and record in space provided on War Department A. G. O. Form No. 462.
63	63	**Batteries.** Clean and dry exterior of batteries and inspect for cracks and leaks. Clean, tighten, and grease terminals. Make sure all electrical connections and battery clamps are tight. Take hydrometer reading (par. 19 **a**) of each cell. Normal reading is 1.275. Report reading 1.225 or less. Make high rate discharge test on each cell. Report differences of more than 30 per cent between

MAINTENANCE		
100-Hour	50-Hour	
		cells. Record hydrometer and discharge readings in space provided on War Department Form No. 462. Add clean water to each cell as required to raise level of electrolyte to three-eighths inch above top of plates. Battery cover must be securely fastened.
64	64	**Accelerator.** Make sure accelerator pedal and linkage have all cotter pins in place, are securely mounted and lubricated, and operate through full range of travel without binding.
65	65	**Starters and Air Heaters.** Operate starters to make sure they engage and develop adequate cranking speed without unusual noise or grind. Operate air heaters one at a time to make sure all ignition coils are buzzing, hand pumps are delivering fuel, and heaters are operating.
66	66	**Leaks.** Inspect all units serviced in the engine compartment for evidence of any fuel, oil, or water leaks while engines are running (par. 46 **b** (2)). Tighten if required. Replace gaskets and other parts if necessary.
68	68	**Generator Regulators.** Inspect mountings and electrical connections to see that they are tight. Regulators must be properly grounded.
68		TEST. Make voltage and amperage tests, using low voltage tester to determine proper functioning of all regulators.
69	69	**Engine Idle.** Run engines separately at idling speed. Tachometer must read from 400 to 450 revolutions per minute. Listen to exhaust for indication of misfiring or uneven operation.
70	70	**Throttle Synchronization.** With clutches locked out, slowly accelerate engines and observe tachometers. Readings must not vary more than 200 revolutions per minute in range from 1,200 to 2,100 revolutions per minute. Place hand throttles in "NO FUEL" position. Make certain governor control lever pin contacts end of slot. Fully depress accelerator pedal. Governor lever pin must move to opposite end of slot. Adjust and tighten linkage as necessary (par. 72).
71	71	**Fighting Compartment.** Inspect fighting compartment, making sure it is clean and free of expended material and that painted surfaces are in good condition and clean. All fighting compartment stowage boxes, racks, brackets, and equipment must be in proper place, in serviceable condition, and securely mounted.

SECOND ECHELON PREVENTIVE MAINTENANCE SERVICE

MAINTENANCE		
100-Hour	50-Hour	
56	56	**Transmission Oil Cooler.** Inspect lines, hoses, connections, and core for leaks and loose mountings. Cooling surfaces must be kept clean.
72	72	**Turret.** Platform doors must open freely. All seats must raise freely and lock in position. Turret locks and gun traveling lock must operate freely and lock securely.
86	86	**Electrical Wiring.** Inspect all wiring, conduits, terminal boxes, and electrical connections. Wiring must be tight, securely mounted, and in serviceable condition. See that all circuit breakers are closed.
		ARMAMENT
126	126	**Guns.** Release turret locks and gun traveling lock. Traverse turret full 360 degrees in both directions. Mechanism and turret must turn freely and operate smoothly without binding or excessive play. Elevate and depress gun. Mechanism and mount must operate freely without binding or excessive play throughout entire travel. Test both manual and electrical firing controls for proper operation. Secure turret locks and gun traveling lock.
128	128	**A. A. Gun Mount.** Install flexible gun mount in turret bracket. Mount must move freely in all directions without binding. Lubricate as required.
129	129	**Spare Gun Barrels and Parts.** Inspect spare gun barrel to see that it is serviceable and properly stowed. Replace all expended armament spare parts.
84	84	**Compass.** Inspect compass to see that it is securely mounted, that it contains sufficient fluid, and is in serviceable condition. See that light operates properly.
73	73	**Periscopes.** All mounts must pivot or rotate freely without binding. All serviceable periscopes must be cleaned, and expended units or heads replaced.
74	74	**Clutch Pedal and Lockouts.** Clutch pedal height must be 10½ inches, measured vertically from lower edge of pedal pad to driver's seat floor plate. When fully depressed, pedal must be three inches from floor. Free pedal travel must be at least one inch. Slowly depress pedal to see that there is no binding in linkage. Pull out both lockout buttons to see that they operate freely without binding and that propeller shaft can be turned freely by hand. If road test disclosed clutches were not engaging in unison, determine cause and correct (par. 117).

MAINTENANCE		
100-Hour	50-Hour	
75	75	**Brakes.** Steering brake levers must have 5 to 5½ inches free travel and be parallel as shoes contact drums. When steering levers are used as parking brake, pedal lock must securely hold levers in applied position and release freely. When transmission parking brake is used, lever must move freely and remain locked in fully applied position. Adjust and tighten linkage as required. Replace brake shoes when road test or inspection reveals either the steering or parking brake lining is no longer serviceable (pars. 133 and 134).
77	77	**Differential and Breather.** Inspect all differential gaskets in driver's compartment for evidence of leaking. Examine all mounting bolts for looseness. Tighten as necessary. Breather must not be clogged. Remove the breather, and clean in fuel oil.
78	78	**Transmission and Breather.** Inspect all transmission seals and gaskets for evidence of leaking. Examine all attaching bolts for looseness. Tighten as necessary. Breather must not be clogged. Remove breather and clean in fuel oil.
80	80	**Gearshift Controls.** Examine for worn or loose linkage. Safety button must operate freely without binding. Tighten and lubricate as necessary.
81	81	**Propeller Shaft.** Inspect universal joint flange bolts for looseness. Inspect universal joints for wear and grease leaks. Tighten bolts and lubricate as necessary. Housing bolts must be tight, and covers securely fastened.
85	85	**Lights and Switches.** With all light switches in "ON" position, inspect all lights including stoplights to see that they are lighted, clean, securely mounted, and go out when switches are turned "OFF." Inspect all switches, making sure all connections and mountings are tightened securely.

TOOLS AND EQUIPMENT

130	130	**Tools and Equipment.** Inspect all tools and equipment to make certain they are in serviceable condition and properly stowed in quantities shown on current On Vehicle Materiel List.
134	134	**Decontaminator.** Shake decontaminator to see that it is full and inspect date on tag to see that charge is not more than 90-days old. Recharge if required. Fasten securely in place.
135	135	**Portable Fire Extinguisher.** Remove and weigh ex-

MAINTENANCE		
100-Hour	50-Hour	
		tinguishers to make sure they are fully charged (par. 224 b). Replace with fully charged units if necessary. Fasten securely in place.
136	136	**Publications and Form No. 26.** See that On Vehicle Materiel List and all publications and forms listed therein, also Standard Accident Form No. 26, are legible and properly stowed.
137	137	**Vehicle Lubrication.** Check lubrication of entire vehicle. On any unit where disassembly was necessary for inspection purposes, lubrication must be performed unless the vehicle is to be deadlined for repair of that unit. Lubricate all points of vehicle in accordance with instructions in this manual, War Department Lubrication Guide No. 113, current lubrication bulletins or directives, and the following instructions: Use only clean lubricant and keep all lubricant containers covered; before applying lubricant, clean lubrication fitting or plug; replace missing or damaged fittings, lines, plugs or vents. On unsealed bushings or joints, the lubricant should be applied until it appears at openings. On units provided with lubricant retainer seals, do not force excess lubricant past seals. Drain oil, while warm, from engine oil tanks, oil sumps, transmission, transfer case, differential, and final drives. Refill units to correct level as soon as draining is completed so units will not be operated without lubricant. The "COLD" oil level as marked on the oil level indicator in transmission is the level desired and if conditions make it necessary to check the level when hot with oil foaming, level may be above level line. Do not apply more than specified amount of lubricant to generator, or starter. To do so may cause a failure of the unit. Wipe off excess lubricant that may soil clothes and equipment, or detract from the vehicle's appearance. Parts or assemblies that have been lubricated while disassembled for inspection, gear cases that have been drained and refilled as mandatory items in the procedures, and those parts that have been indicated in procedures for Special Lubrication may be omitted from the general lubrication of the vehicle.
138		**Modifications.** Inspect vehicle to make certain that all Field Service Modification Work Orders pertaining to the vehicle have been completed.
139	139	**Final Road Test.** Repeat Items 2 to 15, inclusive, paying particular attention to those units on which work has been performed, to make certain they have been restored to first-class operating condition. Correct any deficiencies found during the final road test.

Section XI

ORGANIZATION TOOLS AND EQUIPMENT

42. ORGANIZATION TOOLS AND EQUIPMENT.

a. General. In addition to the vehicular tools and equipment carried on the vehicle (par. 32) for use by the crew, the various maintenance organizations are furnished with sets of special tools and equipment for their use in performing maintenance and repair operations.

b. List of Organization Tools and Equipment. The following list of organization tools and equipment gives the name of the tool, manufacturer's number, Federal stock number, and quantity furnished to each organization. The items are listed alphabetically within the following groups according to their use: (1) Engine, (2) Clutch, (3) Fuel System, (4) Transmission, (5) Differential, (6) Track and Suspension, (7) Hull and (8) General Vehicular Tools.

	Manufacturer's Number	Federal Stock Number	Mechanic's Set	Company Set	Batt'n. Regt. Crew Set	Regt. or Batt'n. Maint. Plat. Set
(1) SPECIAL ENGINE TOOLS			Quantity Issued			
GAGE, cylinder compression	KM-J-1319A	41G-125		1	1	1
HOOKS, engine lifting	KM-J-1925	41H-2584				4
INDICATOR, piston top dead center	KM-J-1929	41I-73-140		1	1	1
REMOVER, broken push rod and cam follower	KM-J-1244	41R-2372-12			1	1
REMOVER, injector and valve spring compressor, also fan shaft bearing retainer oil seal	KM-J-1227	41R-2381-600			1	1
REMOVER, flywheel pilot bearing	KM-J-1914	41R-2381-25				4
REMOVER, push rod, set of 3	KM-J-1245A	41R-2384-47			1	1
STAND, twin motor assembly	KM-J-1924	41S-4987-77				2
WRENCH, cylinder head stud nut 15/16-in. special offset	KM-J-1928	41W-872-300		1	1	1
WRENCH, push rod locknut	KM-J-1922	41W-1986-200		1	1	1
(2) SPECIAL CLUTCH TOOLS						
PILOT, clutch alining	KM-J-1915	41P-402-200			1	1
WRENCH, clutch throw-out bearing locknut	KM-J-1932	41W-865-680		1	1	1
(3) SPECIAL FUEL SYSTEM TOOLS						
GAGE, fuel injector timing	KM-J-1853	41G-198-50		1	1	1
GAGE, fuel pressure	KM-KMO-320	41G-198-75		1	1	1

	Manufacturer's Number	Federal Stock Number	Mechanic's Set	Company Set	Batt'n. Regt. Crew Set	Regt. or Batt'n. Maint. Plat. Set
			Quantity Issued			
TOOL, flaring, fuel line	KM-J-1885A	41T-3140		1	1	1
WRENCH, fuel pump	KM-KMO-326A	41W-495-100		1	1	1
(4) SPECIAL TRANSMISSION TOOLS						
EYEBOLT, 1-in. 8-NC-2, transmission lifting		41B-1586-350				4
(5) SPECIAL ELECTRICAL SYSTEM TOOLS						
CABLE, extension, rubber-covered, 2 conductor stranded, No. 1 GA, with plug on each end		17C-568				6
SLING, final drive and transmission	MTM-3-136	41S-3832-72				4
WRENCH, drain plug transmission and oil tank, 9/16 hex	MTM-3-131	41W-878	1	1	1	1
(6) SPECIAL DIFFERENTIAL TOOLS						
GAGE, pair, brake linkage adjusting	MTM-3-158	41G-10-250	1	1	1	1
WRENCH, drain plug, final drive differential ¾ hex	MTM-3-130	41W-877	1	1	1	1
WRENCH, socket, brake adjusting 1⅛-in. hex	MTM-3-129	41W-2573-400	1	1	1	1
(7) SPECIAL TRACK SUSPENSION TOOLS						
COMPRESSOR, suspension volute spring	MTM-3-3	41C-2556		2	2	2
DRIFT, bogie wheel bearing, installing	MTM-3-13	41D-1463		1	1	1
DRIFT, idler wheel inner bearing, use with puller 41 P-2940-800	MTM-3-41	41D-1543-800		1	1	1
DRIFT, idler wheel inner bearing	MTM-3-15	41D-1540-500		1	1	1
DRIFT, idler wheel outer bearing	MTM-3-14	41D-1540-550		1	1	1
FIXTURE, track connecting with simplex jack	TK-7278	41F-2997-85		1	1	1
GUIDE, bogie wheel gudgeon installing	MTM-3-5	41G-2500		1	1	1
LIFT, bogie wheel medium tank	MTM-3-813	41L-1375		1	1	1
PULLER, idler wheel	MTM-3-8	41P-2940-800		1	1	1
PULLER, bearing, idler wheel (outer)	MTM-3-40			1	1	1
PULLER, screw type without adapter	MTM-3-6			1	1	1
PULLER, slide-hammer type, bogie gudgeon	MTM-3-6A	41P-2957-33		1	1	1
TOOL, idler wheel installing	MTM-3-9	41T-3216-150		1	1	1
WRENCH, box socket, suspension spring compressor, special 1⅝-in. hexagon	MTM-3-2A	41W-640-200		1	1	1
WRENCH, box, special 3-in. hexagon, 44⅝-in. long	MTM-3-7	41W-640-400		1	1	1
WRENCH, socket, bogie wheel gudgeon nut, 2⅜-in. hex	MTM-3-137	41W-2573-150		1	1	1

	Manufacturer's Number	Federal Stock Number	Mechanic's Set	Company Set	Batt'n. Regt. Crew Set	Regt. or Batt'n. Maint. Plat. Set
			Quantity Issued			
WRENCH, socket, locknut, idler wheel shaft, 2⅝-in. hex	MTM-3-21	41W-2574-300		1	1	1
WRENCH, plug, male, ⅝-in. hex	MTM-3-10	41W-1960	1	1	1	1
WRENCH, spanner, track support roller retainer	MTM-3-11	41W-3261		1	1	1
WRENCH, spanner, track support roller lock ring	MTM-3-19	41W-3260		1	1	1
(8) SPECIAL HULL TOOLS						
EYEBOLT, lifting engine compartment top plate	MTM-3-497	41B-1586-200		2	2	2
(9) SPECIAL GENERAL VEHICULAR TOOLS						
BAR, socket, wrench extension 1-in. square drive, 9-in. long	MTM-3-16B	41B-310-100		1	1	1
BAR, socket wrench sliding 22-in.	MTM-3-16L	41B-312-200		1	1	1
HANDLE, tubular, 36-in. long, 1⅛-in. inside diameter, 1$\frac{7}{16}$-in. outside diameter	MTM-3-16C	41H-1498-50		1	1	1
HEAD, square, 1-in., male	MTM-3-16E	41H-1779-50		1	1	1
HEAD, ratchet, socket wrench, 1-in. square drive	MTM-3-16M	41H-1838		1	1	1
WRENCH, set, socket, special 1 in. square drive, extra heavy duty	MTM-3-16A	41W-2622		1	1	1
WRENCH, socket, 1-in. square drive 2¼-in. hexagon	MTM-3-16F	41W-3058-430		1	1	1
WRENCH, socket, 1-in. square drive 2⅜-in. hexagon	MTM-3-16H	41W-3058-450		1	1	1
WRENCH, socket, 1-in. square drive, 1½-in. hexagon	MTM-3-16J	41W-3058-200		1	1	1
WRENCH, socket, 1-in. square drive, 2⅝-in. hexagon	MTM-3-16K	41W-3058-480		1	1	1
WRENCH, socket, 1-in. square drive, 1$\frac{13}{16}$-in. hexagon	MTM-3-16N	41W-3058-300		1	1	1

Section XII

TROUBLE SHOOTING

43. TROUBLE SHOOTING CHART.

a. General. The following trouble shooting chart is provided to assist operating and maintenance personnel in determining the causes and corrections for faulty or inefficient operation of the vehicle. The chart is arranged in paragraphs, for the major units and systems of the vehicle as shown in the above table of contents. Under each symptom is listed possible causes for the trouble, and opposite each cause is the possible remedy.

b. How to Use the Chart. Refer to the preceding table of contents to find the paragraph covering the major unit or system in which the trouble exists. Under that paragraph number in the chart, first locate the symptom. The possible causes are listed in the order in which they are to be investigated. This provides a logical sequence for locating the trouble by the process of elimination, with the most likely causes investigated first. By this procedure the actual cause can be determined and the trouble corrected more quickly. Opposite the possible cause is the possible remedy. In those instances where the possible cause might include one of several, the remedy must be determined by the diagnosis. The diagnosis references, listed after most of the causes, refer to information contained in subparagraphs under **b. Diagnosis** in each of the following paragraphs. These diagnosis notes will be of assistance in determining whether the possible cause is the actual cause. They also contain references for more complete information included elsewhere in this manual.

44. POWER UNIT.

a. Trouble Shooting Chart.

(1) NEITHER ENGINE WILL CRANK.

Possible Cause	Possible Remedy
Battery master switch turned off.	Turn switch on.
Defective starter system.	Par. 51 **a** (1).

(2) ONE ENGINE WILL CRANK, OTHER WILL NOT.

Possible Cause	Possible Remedy
Defective starter system.	Par. 51 **a** (1).
Stripped flywheel ring gear (subpar. **b** (1)).	Notify higher authority.
Fluid block in cylinders, seized or mechanically locked engine (subpar. **b** (2)).	Determine by diagnosis.

(3) ENGINE CRANKS BUT FAILS TO START AT TEMPERATURES ABOVE FREEZING.

Tank selector valve off.	Turn tank selector valve to RH or LH.
Fuel tanks empty.	Fill fuel tanks.
Cranking speed too low (subpar. **b** (3)).	Determine by diagnosis.
Lack of fuel to injectors.	Par. 46 **a** (1).
Exhaust outlet blocked.	Clean outlet.
Water in fuel system.	Par. 46 **a** (1).
Emergency stop valve closed (subpar. **b** (4)).	Open valve and correct trouble.
Blower inoperative (subpar. **b** (5)).	Notify higher authority.

(4) ENGINE CRANKS BUT FAILS TO START AT TEMPERATURES BELOW FREEZING.

Any of reasons in (3) preceding.	Refer to remedies that apply.
Air heater not being operated.	Operate air heater.
Air heater inoperative (subpar. **b** (6)).	Determine by diagnosis.

(5) ENGINE RUNS UNEVENLY, MISSES OR VIBRATES.

Engine temperature too low (subpar. **b** (7)).	Replace thermostat(s).
Incorrect grade of Diesel fuel.	Refill with correct grade of Diesel fuel.
Insufficient fuel supply to injectors, or air or water in fuel system.	Par. 46 **a** (1).
Faulty injector operation (subpar. **b** (8)).	Determine by diagnosis.
Oil in air intake system (subpar. **b** (9)).	Determine by diagnosis.

TROUBLE SHOOTING

Possible Cause	**Possible Remedy**
Governor out of adjustment or faulty operation (subpar. **b** (10)).	Determine by diagnosis.
Low engine compression (subpar. **b** (11)).	Determine by diagnosis.
Loose vibration damper (subpar. **b** (12)).	Notify higher authority.
Binding injector control mechanism (subpar. **b** (13)).	Determine by diagnosis.

(6) ENGINE STALLS FREQUENTLY.

Engine temperature too low (subpar. **b** (7)).	Replace thermostat(s).
Insufficient fuel to injectors.	Par. 46 **a** (1).
Air in fuel system.	Par. 46 **a** (1).
Injector control mechanism binding (subpar. **b** (13)).	Eliminate binding.
Idling speed too low (subpar. **b** (10)).	Adjust idling speed on governor.

(7) SMOKY EXHAUST.

Engine temperature too low (subpar. **b** (7)).	Replace thermostat(s).
Air intake restricted (subpar. **b** (14)).	Determine by diagnosis.
Incorrect grade of Diesel fuel.	Refill with correct grade of Diesel fuel.
Injector timing late, or faulty injector operation (subpar. **b** (16)).	Determine by diagnosis.
Oil in air intake system (subpar. **b** (9)).	Determine by diagnosis.
Low engine compression (subpar. **b** (11)).	Determine by diagnosis.

(8) ENGINE OVERSPEEDS.

Oil in air intake system (subpar. **b** (9)).	Determine by diagnosis.
Fuel control linkage disconnected.	Connect linkage or repair.
Fuel control linkage binding (subpar. **b** (13)).	Determine by diagnosis.
Governor out of adjustment or defective (subpar. **b** (10)).	Determine by diagnosis.

(9) ENGINE DETONATES.

Possible Cause	Possible Remedy
Oil in air intake system (subpar. **b** (9)).	Determine by diagnosis.
Diesel fuel in crankcase.	Par. 87 **a** (1).
Faulty injector operation (subpar. **b** (16)).	Determine by diagnosis.

(10) LOW LUBRICATING OIL PRESSURE.

Refer to paragraph 45.	Par. 45 **a** (1).

(11) ENGINE OVERHEATS.

Insufficient coolant (subpar. **b** (17)).	Replenish coolant and determine cause.
Insufficient air circulation (subpar. **b** (18)).	Determine by diagnosis.
Insufficient water circulation (subpar. **b** (19)).	Determine by diagnosis.
Water temperature gage incorrect (subpar. **b** (15)).	Test and replace.

(12) ENGINE CANNOT BE STOPPED WITH THROTTLE.

Fuel control linkage disconnected.	Connect linkage.
Incorrect throttle linkage adjustment (subpar. **b** (20)).	Adjust linkage.
Oil in air intake system (subpar. **b** (9)).	Determine by diagnosis.
Injector control mechanism binding (subpar. **b** (12)).	Determine by diagnosis.
Faulty injector operation (subpar. **b** (16)).	Determine by diagnosis.
Incorrect governor adjustment or faulty operation (subpar. **b** (10)).	Determine by diagnosis.

(13) ENGINE CANNOT BE STOPPED WITH EMERGENCY STOP BUTTON.

Emergency stop valve incorrectly adjusted or inoperative (subpar. **b** (21)).	Determine by diagnosis.

(14) LOSS OF POWER.

Exhaust outlet blocked.	Clean outlet.
Air intake restricted (subpar. **b** (14)).	Determine by diagnosis.

Possible Cause	**Possible Remedy**
Insufficient fuel supply to injectors.	Par. 46 **a** (1).
Faulty injector operation (subpar. **b** (16)).	Replace injectors.
Incorrect injector timing (subpar. **b** (16)).	Time injectors.
Injector racks incorrectly positioned (subpar. **b** (16)).	Position injector racks.
Injector control mechanism binding (subpar. **b** (13)).	Determine by diagnosis.
Governor incorrectly adjusted or faulty operation (subpar. **b** (10)).	Determine by diagnosis.
Low engine compression (subpar. **b** (11)).	Determine by diagnosis.
Engine misses.	Par. 44 **a** (5).
Engine out of time (subpar. **b** (22)).	Determine by diagnosis.

b. Diagnosis.

(1) Carefully read paragraph 51 **a** (1) and make sure that starter trouble is not electrical. If the starter turns noisily but engine does not crank, the flywheel ring gear is probably stripped and the flywheel must be replaced. Remove starter (par. 190 **c**) and examine starter drive. Through starter opening, turn flywheel with bar and examine ring gear.

(2) If the starter system, starter drive or flywheel ring gear are not at fault and the engine cannot be cranked, engine may be seized, locked mechanically, or may have a fluid block. A seized engine could be the result of operating with insufficient cooling or insufficient lubrication. A mechanical lock is due to failure of engine parts. A fluid block is caused by water or Diesel fuel leaking into a cylinder or cylinders in sufficient quantity to block the upward travel of piston or pistons on compression stroke. To investigate these causes, first remove all six injectors and arrange in same order as when in engine. Station personnel to watch injector openings in cylinder head. Using a bar wedged between nuts on rear universal joint bolts, try turning the engine in direction of rotation (par. 53 **e**). If engine cannot be turned, it is seized or mechanically locked and higher authority must be notified. If engine can be turned, see if water or Diesel fuel is ejected from injector openings in cylinder head and from which ones. **NOTE:** *It is not likely that a leaky injector would cause a fluid block unless vehicle was not operated for long time with fuel tank selector valve not turned "OFF."* If Diesel fuel is

pushed out of a cylinder, replace the injector that was in the cylinder with a new one, install the other injectors and try starting engine. If water is pushed out of cylinder, this may be due to a leaky cylinder head gasket, leaky injector hole tube or to a cracked cylinder head. Remove cylinder head for further inspection. In event of fluid block, drain engine lubricating oil system, replace oil filter element, clean oil strainer and refill system before operating engine, as water or Diesel fuel may have leaked into the crankcase.

(3) Cranking speed can be determined by sound of engine or by watching fan. If cranking speed is too low, engine will not develop sufficient compression to ignite the fuel mixture. Cause may be due to defective starter system (par. 51 **a** (1)). If not, the engine oil may be heavier than recommended for prevailing temperature and should be replaced with recommended grade.

(4) If emergency stop valve is closed, the lever on valve shaft will be in approximately horizontal position. See if return spring is broken or free up valve shaft (par. 89).

(5) If blower does not turn, the engine will not start. If engine is running and blower stops, the engine will stop. The quickest way to tell if blower is operating is to remove the three air cleaners and cover two of the openings. Crank engine with the running engine. Using a small board or piece of sheet metal, determine if there is suction at the third air cleaner opening. If there is no suction, the blower is inoperative and higher authority must be notified.

(6) If air heaters are inoperative, the trouble may be electrical or in the fuel system. Read complete procedure and, in extremely cold weather, make all inspections and tests before again cranking engine to conserve batteries. First make sure that fuel tank selector valve is set to RH or LH and that air heater fuel valve is open. Work air heater fuel pump handle again. If handle pushes in with normal effort, which increases in cold weather, the fuel system is not at fault and the electrical system must be checked. Listen for buzzing of air heater ignition coils. If coils do not buzz, refer to paragraph 51 **a** (5). If air heater pump can be pushed in with practically no effort, this may be due to leaky gaskets on left primary fuel filter, air leaks in supply line to heater fuel pump or defective pump. Clean filter element, replacing gaskets, and fill filter shell with Diesel fuel before installing. Fuel flow can be checked by disconnecting outlet hoses at instrument panel and operating both pumps. Replace pump if defective (par. 97 **f**). If fuel pump handle cannot be pushed in, the air heater fuel nozzles are clogged and must be cleaned (par. 92 **c**).

(7) If engine temperature is below 50°F, engine may run unevenly, detonate and exhaust will be smoky. If this condition continues or develops during operation and engine temperature reads less than 150°F with cold weather accessories installed and operating, the

thermostats are not operating and must be replaced (par. 109 **d**).

(8) Faulty injectors, incorrectly timed injectors, or improperly adjusted rack control levers can cause an engine to run unevenly, miss and vibrate. Test fuel injectors (par. 68 **b**) and replace if necessary (par. 68 **f**). If the injectors are not the cause of trouble, check injector timing (par. 68 **c**) and then see that injector rack control levers are correctly adjusted (par. 68 **g**).

(9) Oil in the air intake system, indicated by excessive exhaust smoke, will cause uneven running and detonation. Such a condition can cause overspeeding and also may make it impossible to stop the engine with the throttle. The reasons for oil entering the combustion chambers through the air intake system are: Oil level in air cleaners too high, causing "oil pull-over." An accumulation of lubricating oil or fuel in air box because of clogged air box drains. Oil leaking into air box or blower housing because of leaky blower rotor shaft seals or leaky blower housing-to-cylinder block gasket. First, make sure that oil in air cleaners is not above the level mark. Next, examine the air box drains (par. 91 **b**) to see that they are open. If drains are open and there is evidence of lubricating oil in air box, notify higher authority.

(10) Incorrect adjustment or faulty operation of the governor can cause the engine to run unevenly, vibrate, stall, or overspeed and may make it impossible to stop the engine with the throttle. An incorrectly adjusted governor also can cause loss of power. Complete the investigation of all other possible causes listed under the trouble in the Trouble Shooting Chart and if actual cause is not uncovered and a faulty governor is indicated, notify higher authority.

(11) Reasons for low compression, causing the engine to miss, run unevenly, vibrate, with smoky exhaust and loss of power, are: Incorrect valve adjustment, sticking or leaky valves, broken valve spring, leaky cylinder head gasket, scored piston or liner, or worn engine. Check all valve adjustments (par. 83) and examine for broken valve springs and sticking valves. If the valve spring is broken, notify higher authority. To tell whether valves are sticking, warm up the engine and run it fast and slow while watching ends of valve stems. If the upward stroke of the stem is not in unison with the rocker arm, space will appear between the two. Should the valve appear sticky, due to a gummy, carboned or corroded stem or possibly a weak valve spring, higher authority must be notified. To test for leaky valve seats, leaky cylinder head gasket, scored pistons or liners, make a compression test (par. 84). If compression is low in any cylinder, remove cylinder head for inspection. If gasket is at fault, replace it (par. 86). If gasket is not the cause, and no pistons or liners are scored, low compression is due to leaky valve seats or worn engine and higher authority must be notified.

(12) Engine vibration or unusual engine noise may be caused by the vibration damper being loose on the crankshaft or the damper being defective. Visually inspect damper from above and if either of the center weight sections is loose, notify higher authority immediately and do not run engine. If damper appears to be in good condition, remove the engine compartment floor plate and try turning the damper on the crankshaft by hand. If it can be turned the least bit, it is loose on the crankshaft and higher authority must be notified at once. Do not run engine.

(13) Binding injector control mechanism can be the cause of frequent stalling, overspeeding, failure to stop engine with throttle, or loss of power. To inspect for binding, first remove rocker arm cover. With throttle set in "NO FUEL" position rotate injector control tube by hand to "FULL FUEL" position and release. If control tube does not return freely to "NO FUEL" position, the binding may be in the injector control tube link, the control tube or injector racks. Disconnect the link at control tube lever to determine if bent link causes binding. If binding still exists, first see if any control levers are binding against injector racks and correct (par. 71 **c**). If there is sufficient clearance between the levers and injector racks, remove control tube (par. 69 **b**) and see if any of the injector racks bind (par. 71 **c**) and if so, replace the injector (par. 68 **f**). If injector racks work freely, examine bearings in injector tube brackets (par. 69 **d**). Wipe the mounting faces of brackets and cylinder head clean and install tube and brackets. Rotate injector control tube as brackets are being tightened to make certain that the tube turns freely.

(14) Restricted air supply will cause smoky exhaust and is one reason for loss of power. Remove and thoroughly clean the air cleaners and elements in accordance with procedure in paragraph 88. If this does not correct the trouble, remove air inlet housing and clean screen (par. 89 **b**).

(15) A water temperature gage may be incorrect and falsely indicate that engine is overheating. With engines operating, compare readings of both water temperature gages. Difference in gage readings must not exceed 20°F. Stop engines and remove both gage tubes from water manifolds and install each tube in water manifold on opposite engine. Fill cooling systems, operate and warm up the engines to test gages. If gage reads incorrectly, replace it, this time installing the right gage in the right engine and the left gage in the left engine.

(16) Incorrectly positioned injector racks, incorrectly timed injectors, or faulty injectors, are causes for smoky exhaust, detonation and loss of power. Make sure that injector racks are correctly positioned (par. 68 **g**). Check injector timing (par. 68 **e**). Test injectors (par. 68 **b**).

(17) Loss of water may be due to a defective filler cap or leaks in the cooling system. Inspect the pressure-type cap. Work the valve to see that it is operating and, if necessary, replace both the cap gasket and gasket under the strainer flange. Thoroughly inspect all cooling system connections, auxiliary water tank, radiator, water pump, cylinder block and cylinder head for evidence of leaks. Tighten connections or replace defective parts to stop leaks. If an internal water leak is suspected, due to leaky cylinder head gasket or leak in cylinder head or cylinder block, partially drain lubricating oil tank and both oil pan sumps to find out if there is water in the engine lubricating oil. If water is found, remove cylinder head (par. 86) for further examination. If cause of trouble is not found, remove oil cooler (par. 59 **b**) and inspect for water leak.

(18) Insufficient air circulation can cause overheating of only one or of both engines. The cause may be clogged air passages in radiators, blocked gratings on engine compartment doors, bent exhaust deflector restricting air flow, inoperative fan or fan incorrectly assembled. See that radiators are clean (par. 102 **a**) and that openings in engine compartment doors are not blocked. If exhaust deflector is bent up, it must be straightened. If either fan does not turn, notify higher authority. If fans turn, see that the fan blade assemblies are put on the right way. The hollow sides of blades must face radiator with the leading edges of blades farther from radiator than trailing edges. Direction of fan rotation is marked on tops of balance weight covers and on radiator sides of fans.

(19) Overheating due to insufficient water circulation can be caused by defective thermostats, clogged radiators or connections or defective water pump. On engine which is overheating, first remove and test thermostats (par. 109 **b** and **c**). If this is not cause of trouble and only one engine overheats, the water pump probably is not pumping and must be replaced (par. 106 **b** and **c**). If both engines overheat, clean and flush the radiators (par. 103 **c**).

(20) Failure of the engine to stop when hand throttle is moved into "NO FUEL" position may be due to incorrect throttle linkage adjustment. First make sure governor control lever is correctly positioned parallel to ends of housing when cam lever is in idling notch (par. 72 **d**). Observe travel of cam lever when throttle is moved into "NO FUEL" position. If cam lever does not contact end of slot, then the throttle linkage must be adjusted according to procedure in paragraph 72. If this does not correct the trouble, adjust the governor in accordance with procedure in paragraph 71.

(21) If engine does not stop when emergency stop button is pressed, the solenoid rod may be incorrectly adjusted, the solenoid inoperative, or the valve not seating or stuck. Remove center air cleaner, then the cleaner at flywheel end, and watch valve shaft lever while stop button is being pressed. If valve operates, check the

solenoid rod adjustment (par. 213 **c** (2)). If valve lever does not operate, remove cotter pin and clevis pin to disconnect lever from solenoid. Work lever by hand to find out if shaft binds. If shaft does not bind and solenoid plunger works freely, the trouble is electrical. Refer to paragraph 51 **a** (6). If shaft binds and cannot be made to operate freely by oiling, replace air inlet housing (par. 89 **b**). If the trouble is not due to any of the above causes, remove the air inlet housing for inspection of valve (par. 89 **c**).

(22) If all other possible causes of loss of power at full load have been investigated and the trouble still exists, it may be that the engine is out of time. Follow procedure in paragraph 85 to check engine timing and if incorrect, notify higher authority.

45. ENGINE LUBRICATING OIL SYSTEMS.

a. Trouble Shooting Chart.

(1) LOW LUBRICATING OIL PRESSURE.

Possible Cause	Possible Remedy
Low oil level (subpar. **b** (1)).	Replenish oil and inspect for leaks.
Oil leaks (subpar. **b** (1)).	Determine by diagnosis.
Fuel in lubricating oil system (subpar. **b** (2)).	Correct cause. Drain and refill system.
Incorrect grade of oil.	Use correct seasonal grade.
Oil pressure gage incorrect (subpar. **b** (3)).	Replace gage.
Air leaks in oil pump suction line (subpar. **b** (4)).	Determine by diagnosis.
Clogged oil cooler or strainer (subpar. **b** (5)).	Determine by diagnosis.
Inoperative oil pump relief valve on pressure regulator valve (subpar. **b** (6)).	Determine by diagnosis.
Defective oil pump (subpar. **b** (6)).	Replace oil pump assembly.
Excessive bearing clearance (subpar. **b** (7)).	Notify higher authority.

b. Diagnosis.

(1) If low oil level is cause of low oil pressure, it is important to determine if level is low because of oil leaks. Make a thorough inspection with the engine operating. Inspect all oil lines and connections in the engine compartment, the filter, strainer, lubricating oil tank, oil cooler and oil pan. Examine for oil leaks at rocker arm

cover gasket. Inspect oil tube to oil pressure switch on instrument panel, also see if oil is leaking from the switch, oil gage or connections. Examine auxiliary water tank to see if there is any lubricating oil in the water. If oil is found, remove oil cooler housing (par. 59 **b**) and oil cooler. Examine gasket and test cooler for leaks. Replace defective cooler (par. 59 **c**).

(2) An excessive amount of Diesel fuel in the lubricating oil can be smelled at the lubricating oil tank filler pipe. Compare sample of oil from lubricating oil tank with new engine oil to see whether it is thinned by Diesel fuel. If thinned oil is found, this may be due to Diesel fuel having been poured into lubricating oil tank by mistake or to leaking fuel pipes or connections under rocker arm cover. There also is a possibility that Diesel fuel could enter the crankcase by reason of a leaky injector if fuel tank selector valve was not turned "OFF" when vehicle was left standing for a long period. If this happened, the faulty injector must be replaced (par. 68 **f**). Remove rocker arm cover and inspect injector pipes and connections for leaks with engine running. Also examine tops of compression nuts on injector pipe connections. If nuts are clean and not covered with darkened deposit of lubricating oil, the connections have been leaking and must be tightened. After leaks are corrected, drain and refill engine lubricating oil system.

(3) To determine whether oil pressure gage reads correctly, first operate both engines and note reading of oil pressure gage for each engine. Disconnect and interchange hoses on oil pressure indicator light switches. Start engines again, and compare gage readings with previous readings. Replace incorrect gage (par. 201), and this time install oil pressure hoses on proper switches.

(4) Low oil pressure may be caused by an air leak between the lubricating oil tank and the oil pump. Examine oil pump inlet hose, fittings, elbows and gaskets for oil leaks which would be evidence of air leaks when the engine is operating.

(5) Low oil pressure could be caused by a clogged engine oil cooler or strainer, but this condition is not likely if engine has been properly serviced. If oil pressure is still low after all possible causes previously listed for low oil pressure have been investigated, remove and inspect oil strainer (par. 58 **c**) and oil cooler (par. 59 **b**).

(6) Cause of low oil pressure or no pressure can be due to faulty oil pump relief valve in oil pump body, faulty oil pressure regulator valve, leaky gaskets on oil pressure pump outlet pipe, or defective oil pump. Report to higher authority.

(7) If excessive bearing clearance, due to worn bearings, is suspected as cause of low oil pressure, this condition will not be indicated by excessive engine noise. Notify higher authority.

46. FUEL SUPPLY SYSTEM.

a. Trouble Shooting Chart.

(1) LACK OF, OR INSUFFICIENT FUEL SUPPLY.

Possible Cause	Possible Remedy
Tank selector valve "OFF" or turned to empty tank.	Position valve correctly.
Empty fuel tank (subpar. **b** (1)).	Fill tanks.
Leaks in fuel system (subpar. **b** (2)).	Determine by diagnosis.
Clogged fuel filters or lines (subpar. **b** (4)).	Determine by diagnosis.
Water in fuel system (subpar. **b** (3)).	Determine by diagnosis.
Defective fuel pump (subpar. **b** (5)).	Replace fuel pump.
Clogged vent hole in filler cap.	Open vent hole.

(2) DIESEL FUEL IN LUBRICATING OIL.

Leaky injector connections or pipes.	Par. 45 **a**.
Leaky injectors.	Par. 45 **a**.

b. Diagnosis.

(1) An empty fuel tank might not be indicated by fuel gage on instrument panel if gage were defective. If this is suspected, remove screen in fuel tank filler opening, remove oil measuring tape from lubricating oil tank filler pipe, wipe clean and use it to measure level of Diesel fuel. If vehicle is not equipped with oil measuring tape, use clean rod or stick.

(2) To inspect fuel system for air or fuel leaks, first fill both sets of fuel tanks. Position the fuel tank selector valve on RH. With compressed air supply not exceeding 10 pounds, use air hose to put pressure in RH tanks for not less than five minutes. While system is under pressure examine all fuel lines and connections, including those to and on instrument panel, for leaks. Replace parts, and tighten connections to stop all leaks. Set fuel tank selector valve to LH and repeat procedure on LH tanks.

(3) To find out if there is water in the fuel system, first drain the primary fuel filter (par. 95 **b**) into suitable container and examine drained fuel for water. Next drain secondary (par. 96 **b**) fuel filter. If there is much water in the filters, partially drain the lower and then the upper fuel tanks and if they contain an appreciable quantity of water the entire fuel system must be drained

(par. 93 **d**) and purged of water (par. 93 **d**). If only a small amount of water was drained from fuel tanks, it is only necessary to purge water from fuel system (par. 93 **d**).

(4) Clean primary fuel filters (par. 95 **b**) and secondary fuel filter (par. 96 **b**) to find out if they are clogged. If any quantity of sediment is found, both fuel tanks must be drained (par. 93 **d**). To test fuel lines and hoses to fuel pump, disconnect line at pump. Turn fuel tank selector valve to RH or LH, making sure that upper fuel tank is at least half full and see if fuel flows freely from line.

(5) If none of preceding possible causes are cause of trouble, remove the fuel pump. If pump does not turn freely by hand or if fuel pump coupling fork is distorted, replace the fuel pump and coupling fork (par. 97 **b**).

47. CLUTCHES.

a. Trouble Shooting Chart.

(1) ENGAGEMENT OF CLUTCHES NOT EQUALIZED.

Possible Cause	Possible Remedy
Binding clutch control linkage (subpar. **b** (1)).	Free up and lubricate linkage.
Linkage out of adjustment (subpar. **b** (2)).	Adjust linkage.
Variation in clutch spring pressure (subpar. **b** (3)).	Notify higher authority.
Defective clutch facings (subpar. **b** (3)).	Notify higher authority.

(2) CLUTCH OR CLUTCHES SLIP.

Clutch pedal lacks free travel (subpar. **b** (4)).	Adjust pedal linkage.
Clutch pedal linkage binding (subpar. **b** (1)).	Free up and lubricate linkage.
Grease or oil on clutch facings or facings glazed (subpar. **b** (3)).	Notify higher authority.
Clutch disk facings worn (subpar. **b** (5)).	Notify higher authority.
Weak or broken clutch spring (subpar. **b** (6)).	Notify higher authority.

(3) CLUTCH OR CLUTCHES DRAG.

Clutch pedal has too much free travel or insufficient total travel (subpar. **b** (7)).	Adjust pedal linkage.

Possible Cause	Possible Remedy
Loose or frayed disk facings (subpar. **b** (7)).	Notify higher authority.
Warped clutch pressure plate (subpar. **b** (7)).	Notify higher authority.
Broken pressure plate release spring (subpar. **b** (7)).	Notify higher authority.
Clutch disk hub sticking on shaft splines (subpar. **b** (7)).	Determine by diagnosis.

(4) INOPERATIVE CLUTCH LOCKOUT(S).

Binding lockout mechanism (subpar. **b** (8)).	Inspect, free up and lubricate mechanism and controls.
Disconnected, broken or incorrectly adjusted control cable or loose conduit (subpar. **b** (9)).	Connect, replace control assembly or adjust.

(5) NOISY CLUTCH RELEASE BEARING OR PILOT BEARING.

Worn or defective bearing (subpar. **b** (10)).	Notify higher authority.

b. Diagnosis.

(1) Friction in the clutch control linkage may be indicated by slowness of the pedal to come up after it has been pushed down. Work the pedal slowly and watch the action. If friction is in linkage between equalizer and clutch release bearings it may not be indicated by delayed return action of the clutch pedal. Raise door over rear universal joint, and watch action of linkage as pedal is being worked. To determine whether binding is in the linkage which is foward of equalizer, disconnect equalizer (par. 116 **d**) and work the clutch pedal.

(2) An examination of the action of the clutch equalizer (par. 115) will disclose whether linkage is out of adjustment. The amount of clearance between equalizer side links, and hooked ends of rear equalizer link must be the same on both sides (par. 116 **d**), when adjustment is correct.

(3) If engagement of the clutches is not equalized and there is no binding in clutch linkage after the linkage has been correctly adjusted (par. 113 **b** and **c**), the trouble is due either to variation in the pressure exerted by the clutch pressure plate springs in the two clutches or the difference in the friction of the clutch disk facings in the two clutches caused probably by oil or grease. These conditions can be determined only by removal and inspection of clutches. Notify higher authority.

(4) Lack of clutch pedal free travel is the most common cause for slipping clutches. See paragraphs 114 and 115.

(5) If an examination of the vehicle log book shows that numerous clutch pedal free travel adjustments have been made, this might indicate clutch disk facings are worn to the extent that they must be replaced. Notify higher authority.

(6) A weak or broken clutch pressure plate spring in one of the clutches would reduce the force required to disengage that clutch. Watch the equalizer while clutch pedal is being operated to see if the equalizer cocks to one side (par. 115). Clutch must be removed and inspected for definite determination. Notify higher authority.

(7) Too much clutch pedal free travel or insufficient total travel would prevent sufficient clutch pressure plate travel to fully disengage the clutches (par. 114). This is the only cause for a dragging clutch which can be determined without removal and inspection of clutches.

(8) Binding clutch lockout mechanism will increase the effort required to pull clutch lockouts out or push them in.

(9) Inspect operation and adjustment of control cable (par. 113 **b** and **c**).

(10) An excessively worn or defective clutch release bearing or pilot bearing usually is indicated by noise. This occurs when engine is operated with clutch held disengaged and when the bearings turn. Clutch must be removed for inspection. Notify higher authority.

48. PROPELLER SHAFT AND UNIVERSAL JOINTS.

a. Trouble Shooting Chart.

(1) NOISY UNIVERSAL JOINTS.

Possible Cause	Possible Remedy
Loose universal joint flange bolts.	Tighten nuts.
Worn universal joints (subpar. **b**).	Replace propeller shaft with universal joints.

b. Diagnosis. To test front universal joint for wear lock out both clutches. Shift transmission into gear. Try turning propeller shaft back and forth by hand and move it up and down to determine whether universal joint bearings or sleeve yoke (slip joint) are worn sufficiently to require replacement. Test rear universal joint in similar manner but see that both clutch lockouts are in and transmission is in neutral.

49. POWER TRAIN.

a. Trouble Shooting Chart.

(1) VEHICLE VEERS TO RIGHT OR LEFT.

Possible Cause	Possible Remedy
One brake dragging (subpar. **b** (1)).	Adjust brake.

Possible Cause	Possible Remedy
Defective idler or bogie wheel bearing (subpar. **b** (1)).	Par. 157 **c** or 159 **c**.

(2) INEFFECTIVE STEERING OR BRAKING.

Excessive brake lever free travel (subpar. **b** (2)).	Adjust brakes.
Incorrectly adjusted linkage (subpar. **b** (3)).	Adjust linkage.
Brake linings worn (subpar. **b** (4)).	Replace shoes.
Brake linings glazed (subpar. **b** (5)).	Replace shoes.

(3) VEHICLE LACKS PULLING ABILITY.

Track tension too tight.	Release track tension.
Steering brakes too tight.	Adjust brakes.
Transmission parking brake too tight.	Adjust linkage.

(4) OVERHEATING OF DIFFERENTIAL OR TRANSMISSION.

Steering brakes too tight.	Adjust brakes.
Low oil level (subpar. **b** (6)).	Fill to level and examine for leaks.
Clogged air pasages in transmission oil cooler.	Clean air passages.
Transmission oil pump inoperative (subpar. **b** (7)).	Notify higher authority.
Clogged transmission oil cooler (subpar. **b** (7)).	Replace oil cooler.
Defective transmission oil cooler thermostat (subpar. **b** (7)).	Replace thermostat.

(5) DIFFICULTY IN SHIFTING GEARS (ALL SPEEDS).

Clutch or clutches do not release.	Par. 47 **a** (3).

(6) DIFFICULTY IN SHIFTING GEARS INTO 2ND AND 3RD OR 4TH AND 5TH SPEEDS.

Gear synchronizers not functioning.	Notify higher authority.

(7) NOISY TRANSMISSION, DIFFERENTIAL OR FINAL DRIVE.

Low oil level (subpar. **b** (8)).	Fill to level and examine for leaks.
Transmission oil pump inoperative (subpar. **b** (7)).	Notify higher authority.
Defective or worn parts.	Notify higher authority.

b. Diagnosis.

(1) If vehicle veers to right or left the most probable cause is steering brake too tight on side toward which vehicle veers. Loosen the adjusting nut on the suspected brake. If this does not correct veering it probably is caused by track being too tight or a defective bearing in idler or bogie wheel. If track tension is correct, examine idler wheel bearing (par. 148 **e**) and bogie wheel bearing (par. 148 **f**).

(2) If steering lever travel is more than eight inches before brake shoes are against brake drums, the brakes must be adjusted (par. 129 **c**).

(3) If vehicle does not respond properly to steering levers and free travel of steering levers is not over eight inches, it is possible the linkage is out of adjustment (par. 131).

(4) Remove steering brake covers (par. 131 **c**) to examine linings. If linings are less than $\frac{3}{16}$-inch thick the brake shoes must be replaced (par. 133 **b**).

(5) Brake shoes must be removed (par. 132) in order to find out if linings are glazed.

(6) Low oil level may be caused by a leak in the power train or transmission oil cooler system. Examine drain plugs, housings, gasketed joints, tubes, fittings, hoses and the transmission oil cooler for evidence of oil leaks. Tighten connections, replace gaskets or damaged parts as required to correct cause of leak or if necessary notify higher authority.

(7) Excessively high transmission oil temperature may be due to an inoperative transmission oil pump, clogged lines or oil cooler or defective transmission oil cooler thermostat. To trouble-shoot for these conditions, first make certain that oil in transmission is up to the full mark. Next disconnect oil cooler outlet hose, the one closest to fuel selector valve, at oil cooler and provide suitable container under cooler outlet. Start engine, operate with clutch lockouts and transmission in neutral so transmission oil pump will be driven. Notice if oil is being forced from cooler outlet. If not, disconnect oil cooler inlet hose from oil cooler. If oil is not being pumped out of inlet hose, transmission oil pump is inoperative and higher authority must be notified. If oil flows, then the oil cooler is clogged and must be replaced (par. 142).

(8) If transmission oil pump failure is the suspected cause of overheating, loosen the oil line connection at top of differential carrier. Make sure oil is up to proper level in transmission. Start engine and operate transmission in neutral at 1,000 revolutions per minute. If oil is forced from fitting the pump is operating. Tighten fitting. If no oil is forced from fitting the oil pump is not operating. Notify higher authority.

50. TRACKS, SPROCKETS, IDLERS AND BOGIES.

a. Trouble Shooting Chart.

(1) VEHICLE VEERS TO RIGHT OR LEFT.

Possible Cause	Possible Remedy
One track too tight.	Adjust track.
Weak or broken bogie springs (subpar. **b** (1)).	Replace springs.
Tight or broken bearing in bogie or idler wheel (subpar. **b** (2)).	Determine by diagnosis.
Bent idler wheel spindle (subpar. **b** (3)).	Replace spindle.

(2) TRACK RUNS ROUGHLY OR VERY NOISILY.

Dead track link (subpar. **b** (4)).	Replace track link.
Insufficient track tension (subpar. **b** (5)).	Adjust track tension.
Bent idler wheel spindle (subpar. **b** (3)).	Replace idler spindle.
Worn connectors (subpar. **b** (6)).	Replace connectors.
Loose or worn sprocket (subpar. **b** (7)).	Tighten or replace sprocket.
Damaged bogie wheel tire.	Replace bogie wheel.

(3) THROWN TRACK.

Insufficient track tension (subpar. **b** (5)).	Adjust track tension.
Bent idler wheel spindle (subpar. **b** (3)).	Replace idler spindle.
Weak or broken springs in end suspensions (subpar. **b** (2)).	Replace springs.

b. Diagnosis.

(1) A weak or broken bogie spring can cause vehicle to veer or pull to one side and if the spring is in a front or rear bogie, it may cause track to be thrown. Inspect bogie springs (par. 160 **c**), and replace weak or broken spring (par. 160 **d**).

(2) If a bogie or idler wheel bearing is too tight or broken so wheel cannot turn freely, the drag on the track will cause vehicle to veer. Inspect bogie wheel bearing (par. 159 **d**) or idler wheel bearings (par. 157 **d**), and replace damaged bearings.

(3) A bent idler wheel spindle can cause vehicle to veer, cause track to run noisily or rough, and may cause a thrown track. An idler wheel which is scraped on one side by track connectors ordinarily indicates a bent spindle. Sight along outer edge of wheel, and

if it is not parallel with vehicle the spindle is bent and must be replaced (par. 157 **h**).

(4) A dead track link may cause the track to run roughly or noisily. Carefully examine track for dead links (par. 148 **c**), and replace links (par. 151 **b**).

(5) Insufficient track tension can cause the track to run roughly or noisily, or to be thrown. Check track tension (par. 148 **c**) and adjust (par. 150 **b**). Also inspect idler wheel spindle (par. 157 **d**) and if bent, replace spindle (par. 157 **h**).

(6) Excessively worn end connectors can cause a snapping noise whenever power is applied to the tracks. Examine wearing surfaces on end connectors, and reverse or replace worn connectors (par. 148 **c**).

(7) If track runs roughly or noisily it may be due to loose or worn sprockets. If sprocket teeth are worn, reverse the sprockets (par. 156 **d**) or replace (par. 156 **f**). Tighten all studs in sprocket drive shaft, all hub nuts and sprocket bolts. Worn studs, and hubs or sprockets with worn holes must be replaced.

51. ELECTRICAL SYSTEM AND INSTRUMENTS.

a. Trouble Shooting Chart.

(1) FAULTY STARTER SYSTEM.

Possible Cause	Possible Remedy
Battery master switch "OFF."	Turn battery master switch "ON."
Battery trouble (subpar. **b** (1)).	Determine by diagnosis.
Faulty battery master switch (subpar. **b** (2)).	Replace battery master switch.
Circuit breaker "OFF" (subpar. **b** (3)).	Press reset button "IN."
Inoperative solenoid or switch (subpar. **b** (5)).	Replace solenoid switch.
Defective circuit (subpar. **b** (4)).	Determine by diagnosis.
Inoperative starter drive or starter (subpar. **b** (6)).	Replace starter.

(2) FAULTY GENERATOR SYSTEM.

Battery master switch "OFF".	Turn battery master switch "ON."
Battery trouble (subpar. **b** (1)).	Determine by diagnosis.
Faulty battery master switch (subpar. **b** (2)).	Replace battery master switch.
Faulty generator.	Determine bv diagnosis.
Faulty generator regulator (subpar. **b** (8)).	Replace regulator.

Possible Cause	Possible Remedy
Circuit breaker "OFF" (subpar. **b** (3)).	Press reset button "IN."
Defective ammeter or voltmeter (subpar. **b** (9)).	Replace ammeter or voltmeter.
Defective circuit (subpar. **b** (4)).	Determine by diagnosis.

(3) LIGHTS INOPERATIVE.

Battery master switch "OFF."	Turn battery master switch "ON."
Battery trouble (subpar. **b** (1)).	Determine by diagnosis.
Faulty battery master switch (subpar. **b** (2)).	Replace battery master switch.
Circuit breaker "OFF" (subpar. **b** (3)).	Press reset button "IN."
Lamp or lamp-unit burned out (subpar. **b** (10)).	Replace lamp or lamp-unit.
Faulty light switches (subpar. **b** (11)).	Determine by diagnosis.
Defective circuit (subpar. **b** (4)).	Determine by diagnosis.

(4) SIREN INOPERATIVE.

Battery master switch "OFF."	Turn battery master switch "ON."
Battery trouble (subpar. **b** (1)).	Determine by diagnosis.
Faulty battery master switch (subpar. **b** (2)).	Replace battery master switch.
Circuit breaker "OFF" (subpar. **b** (3)).	Press reset button "IN."
Dirty or faulty siren (subpar. **b** (2)).	Determine by diagnosis.
Defective circuit (subpar. **b** (4)).	Determine by diagnosis.

(5) AIR HEATER IGNITION TROUBLE.

Circuit breaker "OFF" (subpar. **b** (3)).	Press reset button "IN."
Faulty ignition coils (subpar. **b** (13)).	Replace ignition coils.

(6) EMERGENCY STOP VALVE SOLENOID INOPERATIVE.

Circuit breaker "OFF" (subpar. **b** (3)).	Press reset button "IN."
Defective solenoid (subpar. **b** (14)).	Replace solenoid.

TROUBLE SHOOTING

(7) LOW OIL PRESSURE SIGNAL LIGHT INOPERATIVE.

Possible Cause	Possible Remedy
Battery master switch "OFF."	Turn battery master switch "ON."
Battery trouble (subpar. **b** (1)).	Determine by diagnosis.
Faulty battery master switch (subpar. **b** (2)).	Replace battery master switch.
Circuit breaker "OFF" (subpar. **b** (3)).	Press reset button "IN."
Faulty oil pressure switch or micro-switch (subpar. **b** (15)).	Determine by diagnosis.
Defective circuit (subpar. **b** (4)).	Determine by diagnosis.

(8) INCORRECT OR INOPERATIVE FUEL AND OIL GAGE.

Battery master switch "OFF."	Turn battery master switch "ON."
Gage control switch "OFF" or incorrectly positioned.	Turn switch to proper position.
Battery trouble (subpar. **b** (1)).	Determine by diagnosis.
Faulty battery master switch (subpar. **b** (2)).	Replace battery master switch.
Circuit breaker "OFF" (subpar. **b** (3)).	Press reset button "IN."
Faulty fuel and oil gage (subpar. **b** (16)).	Determine by diagnosis.

(9) NO CURRENT AT ACCESSORY OUTLET.

Battery master switch "OFF."	Turn battery master switch "ON."
Battery trouble (subpar. **b** (1)).	Determine by diagnosis.
Faulty battery master switch (subpar. **b** (2)).	Replace battery master switch.
Circuit breaker "OFF" (subpar. **b** (3)).	Press reset button "IN."
Faulty socket.	Replace socket.
Defective circuit (subpar. **b** (4)).	Determine by diagnosis.

(10) INCORRECT OR INOPERATIVE ENGINE TEMPERATURE GAGE.

Faulty engine temperature gage.	Par. 44 **b** (15).

(11) INCORRECT OR INOPERATIVE OIL PRESSURE GAGE.

Faulty oil pressure gage.	Par. 45 **b** (3).

(12) INCORRECT OR INOPERATIVE TRANSMISSION OIL TEMPERATURE GAGE.

Faulty transmission oil temperature gage (subpar. **b** (17)).	Replace transmission oil temperature gage.

Possible Cause	Possible Remedy
(13) INCORRECT OR INOPERATIVE TACHOMETER.	
Tachometer out of calibration (subpar. **b** (18)).	Replace tachometer.
Defective tachometer drive or tachometer (subpar. **b** (19)).	Determine by diagnosis.
(14) INCORRECT OR INOPERATIVE SPEEDOMETER.	
Defective speedometer drive or speedometer (subpar. **b** (20)).	Determine by diagnosis.

b. Diagnosis.

(1) If battery master switch is turned on and no voltage, or insufficient voltage, is being supplied, test for battery trouble. If voltmeter on instrument panel reads less than 24 volts, check condition of battery with universal battery tester (17-T-5575) to find out if any cells are defective. If so, replace battery. If voltmeter reads approximately 24 volts or more, clean and tighten all battery terminals. Next clean and tighten negative battery ground connection. Then tighten positive battery cable terminal nut on battery master switch. Test electrical system by cranking engines with starters. If starters do not crank engines, take hydrometer reading of each battery cell (par. 186 **b** (2)). If corrected hydrometer readings are less than 1.250, batteries must be recharged or replaced. If batteries test satisfactorily, refer to trouble shooting chart for other possible causes of electrical trouble.

(2) If causes of electrical trouble are investigated in the order given in trouble shooting chart, the batteries will have been tested and recharged or replaced if necessary, and trouble now may be due to a faulty battery master switch. With master switch turned on, see that switch handle has sufficient clearance in hole in battery box. If lower edge of handle has been touching edge of hole, switch contacts may be burned and switch must be replaced (par. 187 **b**). If handle has sufficient operating clearance, disconnect positive battery cable from battery terminal. Next, disconnect other end of positive battery cable from battery master switch and attach it to other terminal on master switch, leaving the wire already on the terminal in place. Replace washer and tighten nut. Reconnect positive battery cable to battery terminal. Try starters again, and if they work, remove and replace battery master switch (par. 187 **b**). NOTE: *If new master switch is not immediately available and it is necessary to operate vehicle, this can be done by leaving positive battery cable connected to the other side of switch as outlined in above test procedure. Replace switch at first opportunity.*

(3) If the circuit breaker is "OFF," the red reset button will be projecting about ¼ inch from face of instrument panel. Reset or

turn circuit breaker on by pushing reset button in, but do not hold it in as this will ruin the circuit breaker. If reset button again pops out after it has been pushed in, there is a short circuit somewhere, which must be located (par. 51 **b** (4)) and corrected before pushing circuit breaker reset button again.

(4) By a defective circuit is meant a short circuit or an open circuit. A short circuit may be due to a wire with damaged insulation or disconnected wire making contact with a metal part of vehicle or to faulty insulation in the electrical unit to which the circuit supplies current. An open circuit may be due to a broken or disconnected wire, corroded or loose connection, damaged circuit breaker, faulty switch or trouble within the electrical unit. A short circuit always is indicated by circuit breaker reset button being in the snapped-out position (subpar. **b** (3) above). The following procedure can be used for trouble shooting all circuits controlled by circuit breakers in the instrument panel. In case of a short circuit, first examine insulation on wires, also look for a disconnected wire. If the trouble is not located, test the wiring in that circuit. At the electrical unit, disconnect the wire supplying current and tape the end. Push circuit breaker reset button in. If there is a switch in the circuit, it must be closed, or if a button, held in. If the circuit breaker reset button snaps out, the short circuit is in the wire which must be repaired or replaced. If reset button stays in, the short circuit is in the electrical unit which must be replaced. In case of an open circuit, first see if current is being supplied to the instrument panel and to the other electrical units. If there is no current to the instrument panel, examine wiring and connections on both battery switches and the bus bars in the battery box. If connections are tight, trouble is in battery box to instrument panel wires or in plug connector at instrument panel. If there is current at instrument panel and none to the electrical unit when circuit breaker reset button is in and switch or button in the circuit is closed, test for current supply at the unit. Use low voltage circuit tester (17-T-5575) or 24-volt test lamp with one clip attached to the supply wire disconnected from the electrical unit and one clip to ground contact on vehicle. If current is coming through the wire, the trouble is in the electrical unit and it must be replaced. If no current is coming through the wire, the trouble is in the wiring, the terminal box connections, circuit breaker, or in the switch or button controlling the circuit. When trouble shooting the circuits for the siren, auxiliary starter buttons, stop light or low oil pressure signal light, first test for current supply at switch. If there is current, the trouble either is in the switch or wire from switch to the electrical unit. If no current is supplied, use the following procedure to test circuit controlled by any circuit breaker. Refer to vehicle wiring diagram (fig. 142) to locate the terminal box for the particular circuit. Remove terminal box cover, check the terminals

and use low voltage tester or test lamp to see if wire is delivering current to terminal box connection. If it is, then the trouble is in the wire from terminal box to electrical unit. If there is no current flowing to terminal box, refer to the wiring diagram for the system (figs. 143 through 148) which includes the circuit being checked and find the symbol for that wire. Next refer to list of wires (par. 185 **c**) and get the key letter of this wire. Remove the instrument panel connector which contains the terminal for the wire being checked. Look for this key letter marked on the bakelite base of connector plug on end of conduit to locate female terminal of the wire. Connect test clip of one lead on low voltage tester or test lamp to battery. Hold other lead in good contact with correct female terminal on connector plug on conduit. Ground other end of wire being tested. Tester or test lamp will indicate whether wire is cause of trouble. If the circuit is open, repair the wire or replace the system (conduit assembly). If the wire tests satisfactorily, the trouble is in the circuit breaker, the switch, or in the male plug connector with wiring, on the instrument panel. Remove instrument panel (par. 192 **b**), and replace defective unit. By reference to wiring diagrams and list of wires similar test procedure can be used for all other circuits not controlled by circuit breakers.

(5) If neither the starter button on instrument panel or auxiliary starter button on filter panel will operate starter, remove wire from solenoid switch. With either starter button held in, touch solenoid switch wire to starter frame. Spark will indicate whether wire is carrying current. If it is, the solenoid switch must be replaced (par. 191 **b**).

(6) If the solenoid operates the starter drive shaft lever and starter does not crank engine, the trouble is in the starter drive, starter gear, or flywheel ring gear is stripped (par. 44 **b** (1)) and starter must be replaced.

(7) Faulty generator operation may be due to dirty commutator, worn brushes, or weak brush springs. Remove cover band, examine commutator and brushes and tension of brush springs. If springs have sufficient tension and brushes are not worn, clean commutator. Start engine and watch ammeter. If there is no increase in charging rate, accurately test generator output with low voltage tester (17-T-5575). If generator is not charging, it must be replaced (par. 188 **d**).

(8) If the trouble in the generator system is not in the generator, the generator regulator must be at fault. Two indications of this are that the ammeter would not show any charge when engine is running, or show a high rate of discharge when engine is stopped, and battery master switch is on but no other electrical units in operation. To check the regulator, use low voltage tester (17-T-5575) and follow instructions inside lid of tester. If generator regulator is at fault, it must be replaced (par. 189 **b**).

TROUBLE SHOOTING

(9) If it is suspected that ammeter or voltmeter reads incorrectly or shows no reading, connect low voltage tester (17-T-5575). Check ammeter or voltmeter reading against reading of tester meter which also will be a test of generator and generator regulator operation. Replace ammeter (par. 196) or disconnect voltmeter if necessary (par. 196), but first correct any other trouble existing in the electrical system disclosed by tests.

(10) If one service headlight lights and the other does not, the simplest way to find out if lamp-unit is burned out is to turn switch off, interchange headlights and turn switch on. If blackout driving light does not light, after making sure blackout switch is on and light switch is pulled to blackout position, replace the light unit. If blackout driving light still does not light, replace resistor unit behind the instrument panel. If either the service or blackout stop light does not burn, first check both stop light switches before replacing lamp-units (par. 51 **b** (11)). To determine whether any other lamp-unit or lamp is burned out, replace it with a new one. If new one does not light, test it with wires held on battery to see if it lights before checking for faulty socket or defective wiring.

(11) To test for faulty light switch, first see that circuit breaker reset button No. 5 is in (fig. 10). Pull light switch to blackout position. If none of blackout lights are burning (see lighting chart par. 5 **h** and fig. 12), either the light switch or circuit breaker is at fault. Press safety button in, and pull switch into second position. If neither of the service headlights or the service taillight light, in all probability the trouble is in the circuit breaker. To test stop light switches, first find out if either the blackout stop light or service stop light lights when the driving light switch is in proper position and both steering levers are pulled back. If either stop light lights, replace the stop light lamp-unit in the other taillight. If neither stop lights lights, short-circuit both stop light switches by connecting a short jumper wire across the terminals on each switch. If the stop light lights with driving light switch in proper positions, one or both stop light switches are either out of adjustment or defective. Adjust both stop light switches (par. 216 **b**). If neither stop light lights replace both stop light lamp-units. If stop lights then do not light the trouble is in either the driving light switch or the wiring. Test circuit (subpar. **b** (4) above).

(12) To test siren, remove cover and blow out all dirt with compressed air. If shaft turns freely by hand but does not rotate when siren switch is pressed, hold switch down and test ground connection between hull and bracket with screwdriver. If siren does not sound, use a jumper on switch terminals. If siren blows, replace switch; and if it does not, replace siren (par. 218 **b**).

(13) If air heater coils do not buzz when switch is on, touch a grounded jumper to terminal with green wire to see if there is

current to the coils. If there is, replace coils (par. 212 **b**). If there is no current, see paragraph **b** (4) and test circuit. If coils buzz and air heater does not operate, see paragraph 92.

(14) To test solenoid, remove wire supplying current. With emergency stop button held in, touch wire to blower housing to see if wire is carrying current. If it is, first check solenoid ground connection and if connection is tight, replace the solenoid (par. 213 **b**). If no current is flowing to solenoid, see subparagraph **b** (4) above and test circuit.

(15) To test a low oil pressure signal light, first see that throttle lever is in IDLING position and ground the terminal on low oil pressure switch. If the signal light operates, replace the pressure switch. If signal light does not light, replace the lamp. If light still does not work, check operation of microswitch (par. 217). If switch arm makes proper contact with throttle lever, connect the terminals with a jumper; and if signal light operates, replace microswitch (par. 217 **b**).

(16) Read this entire subparagraph before doing any trouble shooting on faulty fuel and oil gage. If the fuel and oil gage shows "FULL" when selector switch is positioned for one of the tanks which is not full, the fuel gage tank unit either is disconnected, not properly grounded, is burned out, or there is an open circuit in wire from tank unit to gage. If the suspected tank unit is in a full tank, the easiest test is to remove terminal box cover on same side of vehicle. Remove tank unit wire from terminal No. 3 and connect a new tank unit to this terminal. Ground the body of new tank unit to vehicle with a wire, and work float to test fuel and oil gage. If gage registers, the defective fuel tank unit must be replaced (par. 210). If the tank unit is in a lubricating oil tank, clean and tighten terminal nut on tank unit. Next tighten screws which attach tank unit to tank for better ground. If this does not correct the trouble, replace tank unit (pars. 210 and 211). If gage still does not register, test for open circuit in wiring from tank unit to gage (subpar. **b** (4) above). If fuel and oil gage shows empty when selector switch is positioned for one of the tanks which is not empty, make test with new tank unit. Attach gage wire to terminal on new tank unit and ground the body of new tank unit to vehicle with wire. Work the float and if fuel and oil gage does not register, either the wiring from tank unit to gage is short circuited, the fuel and oil gage is inoperative, or the selector switch is defective. If wire is suspected, trace circuit on wiring diagram (fig. 170). Remove connector plug which connects the wire from tank unit and instrument panel and test wire (subpar. **b** (4) above). If wire is not shorted, replace fuel and oil gage. If fuel and oil gage shows "EMPTY" for all positions of selector switch, or pointer hand does not move when selector switch is positioned, the trouble either is in the fuel and oil gage or the selector switch.

TROUBLE SHOOTING

(17) To test a transmission oil temperature gage, operate vehicle to warm transmission oil to 150° to 200°F. Remove transmission oil filler cap and strainer, and insert the bulb of new transmission oil temperature gage into filler pipe so that it is immersed in the oil. When new gage indicates the maximum oil temperature, compare reading with oil temperature gage on instrument panel. If there is an appreciable difference in gage readings, replace the defective gage (par. 209).

(18) To test tachometers, operate both engines with clutches engaged and compare tachometer readings. If the variation is more than 100 revolutions per minute, one tachometer or the other is out of calibration. Since instrument panel must be removed to remove tachometers, both instruments can be removed for calibration check.

(19) To test tachometer drive, disconnect tachometer shaft at adapter on flywheel housing. Examine drive pin. Start engine, and see if adapter gear is being driven. If it is, try pulling cable out of casing with fingers. If cable cannot be pulled out, it is not broken, and tachometer must be replaced (par. 207 **a**).

(20) To test speedometer drive, disconnect speedometer shaft at adapter on transmission. Operate vehicle, and see if adapter gear is being driven. If it is, try pulling cable out of casing with fingers. Cable can be pulled out if broken, and if it cannot, replace speedometer (par. 207 **a**).

Section XIII

POWER UNIT

52. POWER UNIT.

a. General Description. The power unit is a Model 6046 twin six-cylinder, two-cycle General Motors Diesel unit. The two six-cylinder engines complete with clutches are mounted side-by-side. A transfer gear unit, through which the engines are connected, is bolted to the two clutch housings. The engines are liquid cooled and have separate cooling systems, starters, generators, fuel pumps and

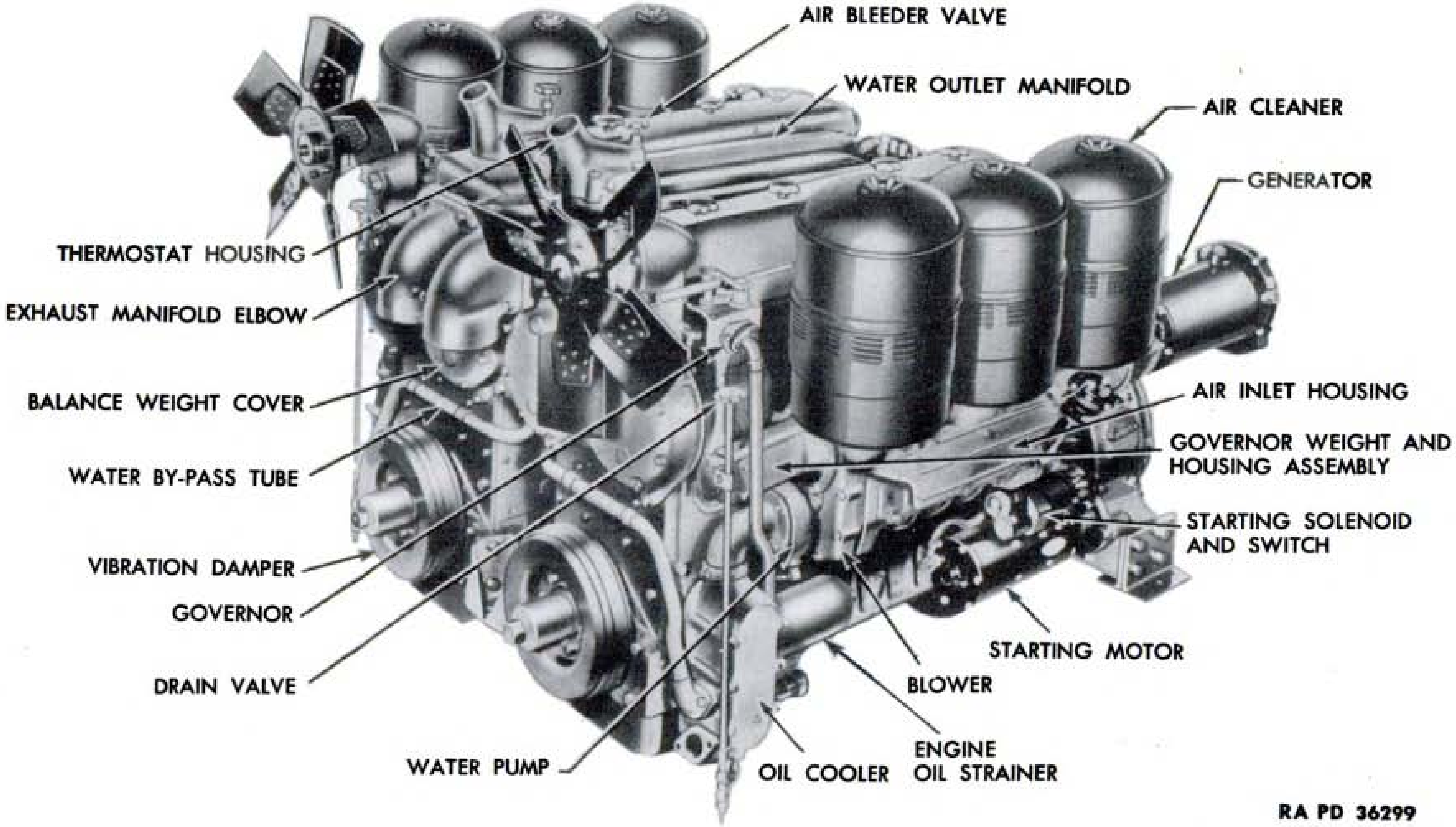

RA PD 36299

Figure 32—General Motors Twin Diesel Power Unit

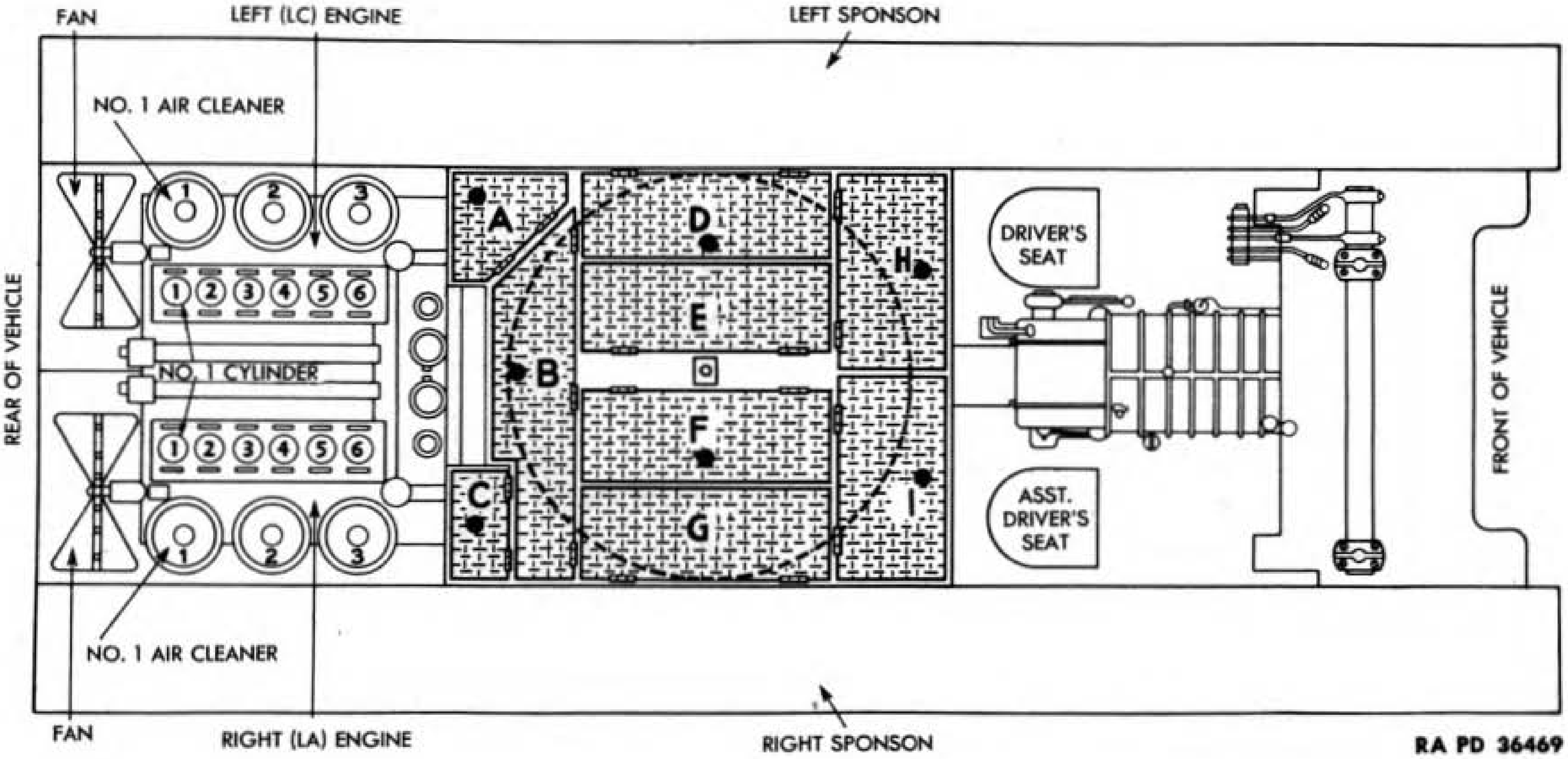

Figure 33—Position of Units in Vehicle

lubrication systems. Individual clutches make it possible to start or operate the engines independently and, in an emergency, the vehicle can be propelled by one engine.

53. POWER UNIT NOMENCLATURE AND TABULATED DATA.

a. General. The power unit of the M10 is in the rear of the vehicle with the fan ends of the engines toward the rear, and flywheel ends toward the front of the vehicle. To avoid any possibility of confusion in ordering parts or in instructions for maintenance of the engines, it is necessary to firmly establish the following designations and terms (fig. 33).

b. Left Engine and Right Engine. All references to left and right refer to these positions when sitting in the driver's seat facing forward (fig. 33). Therefore, the left engine (designated by letters LC on engine serial number plate) is on the left side of the vehicle. The right engine (designated by letters LA on engine serial number plate) is on the right side of the vehicle. To avoid confusion when ordering parts for the engines the designations LC or LA as given on serial number plates will be used and the terms left engine and right engine will be avoided. This is very important as all the non-interchangeable parts as listed in Standard Nomenclature Lists and Service Parts Catalogs are designated LC or LA.

c. Fan End and Flywheel End of Engines. To avoid any confusion in the use of the terms front and rear in referring to engines and the location of engine parts the terms "fan end" and "flywheel end" will be used exclusively, regardless of whether engines are in or out of vehicles.

d. Fuel and Oil. To avoid any confusion between fuel oil used to operate the engines and engine lubricating oil, only the terms fuel or Diesel fuel will be used to designate the engine fuel. The terms "oil" or "lubricating oil" will refer to the oil used to lubricate the engines and other components.

e. Direction of Rotation. Tabulated below are the directions of rotation of various parts of the power unit.

DIRECTION OF ROTATION
WHEN VIEWED FROM FAN END

Part	Right Engine	Left Engine
Crankshaft	Counterclockwise	Counterclockwise
Camshaft	Clockwise	Counterclockwise
Fan	Counterclockwise	Clockwise
Generator	Counterclockwise	Clockwise
Blower (drive shaft)	Counterclockwise	Clockwise
Fuel Pump	Clockwise	Counterclockwise
Starting Motor	Clockwise	Clockwise

DIRECTION OF ROTATION
WHEN VIEWED FROM FLYWHEEL END

Part	Right Engine	Left Engine
Engine Driven Shaft	Counterclockwise	
Generator	Clockwise	Counterclockwise
Tachometer Drive	Clockwise	Counterclockwise

f. Serial Number Plates. Plates on the power unit and on each engine show model numbers and serial numbers used to identify the units for the purpose of keeping records and when ordering parts or requesting information.

(1) POWER UNIT SERIAL PLATE. This plate is attached in horizontal position on the flywheel housing inspection plate. When the power unit is in the vehicle, a mirror has to be used to read this serial number plate.

(2) ENGINE SERIAL NUMBER PLATES. On the right engine the number plate is on the side of the cylinder block at flywheel end, directly above the handhole cover, in back of the secondary fuel filter. On the left engine the number plate is on the side of the engine block at the fan end, directly above the handhole cover, in back of the governor control housing. The engine serial number is also stamped into a boss on the cylinder block directly above the serial number plate.

g. Tabulated Data.

Make and type	General Motors Twin Diesel two-cycle in line, direct injection
Model and series	Series 71, Model 6046
Over-all length (front of fan to rear of generator)	70¾ in.
Over-all width (installed, including air cleaners)	59¾ in.
Over-all height (tip of fan blade to bottom of oil pan drain plug)	45²¹⁄₃₂ in.
Total weight of power plant	4,490 lbs
Weight of 2 radiators and auxiliary water tanks	380 lbs
Weight of 30 gal cooling water	221 lbs
Total weight of power plant and cooling system	5,050 lbs
Rated horsepower (2 engines combined)	375 at 2,100 rpm
Maximum full-load engine speed	2,100 rpm
Maximum no-load engine speed	2,250 rpm
Total displacement—each engine	425 cu in.
Bore and stroke	4¼ x 5 in.
Compression ratio at 1,000 rpm—16/sq in.	500
Compression ratio (nominal)	16 to 1
Number of cylinders (each engine)	6

POWER UNIT

Firing order of cylinders	1-4-2-6-3-5
Location of No. 1 cylinder	Nearest cylinder to fan
Recommended Diesel fuel	U. S. Army Spec. No. 2-102B
Maximum torque at propeller shaft	800 ft-lb at 1,500 rpm
Idling speed	400 to 450 rpm
Diesel fuel oil, total for vehicle	148 gal
Upper tank—each 59½ gal	
Lower reserve tank—each 14½ gal	
Engine lubrication oil capacity (complete system with tank)	32 qt each
Engine lubrication oil capacity (tank)	24 qt each
Engine transfer gear unit capacity	2½ qt
Second type AC air cleaner capacity	3½ qt each
Donaldson type air cleaner capacity	2½ qt each

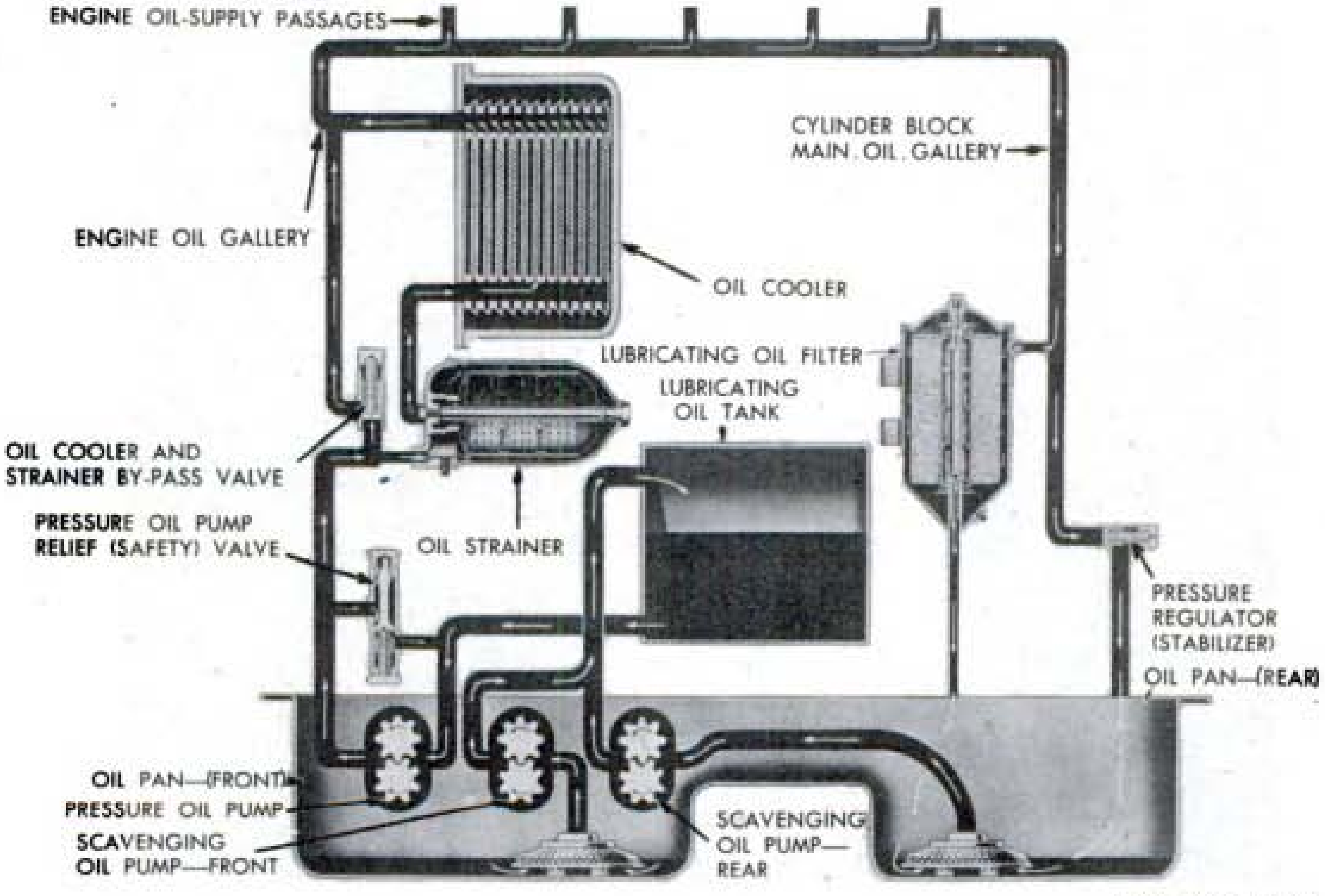

RA PD 36470

Figure 34—Schematic Diagram of Engine Lubrication

54. ENGINE LUBRICATING SYSTEM.

a. Description. Each engine has an independent lubricating system (fig. 34). The engines are the dry sump type and the oil supply, instead of being in the crankcase as in the conventional car or truck engine, is contained in separate tanks. The two tanks are mounted in the engine compartment, one on each side at the forward end. Two hose connections, a supply and a return, connect each tank to inlet and outlet elbows on the oil pan of the engine to which the tank supplies oil.

(1) The lubricating system for each engine includes an oil pump assembly, oil strainer, oil cooler, oil filter, and an oil storage tank, also connections, passageways and tubes through which the oil is pressure fed to the points in the engine requiring lubrication.

(2) Oil drawn from the supply tank is forced through an oil strainer and then an oil cooler, which are mounted on the outside of the engine. From the cooler, oil is forced into the main oil gallery in the engine block, through passageways to the seven main bearings and through drilled holes in the crankshaft to the connecting rod bearings. The piston pin bushings also are pressure lubricated. Oil is sprayed out of upper ends of connecting rods onto under sides of piston heads to help cool the pistons. Oil is forced to the bearings on each end of the camshaft and balance shaft and to intermediate camshaft bearings, rocker arm bushings, and clevis pin bearings. Surplus oil drains down into the camshaft compartment, and is directed to lubricate the gear train, the blower drive gears, and the governor weight assembly. Surplus oil drains into the oil pan. External oil lines deliver oil to blower drive gear bearings and to fan drive gears. Oil draining into the oil pan collects in the sumps at front and rear and is drawn out by the two scavenger pumps, and returned to the supply tank for recirculation.

55. DRAINING ENGINE LUBRICATING OIL SYSTEM.

a. **General.** Since each engine has a separate lubrication system, the operations will be repeated when draining both engine lubricating systems.

b. **Draining Engine Lubricating Oil System.** Remove four bolts and lock washers attaching each of the two engine lubricating oil pan drain hole cover plates (fig. 140) to the engine compartment floor plates, and remove cover plates and gaskets. Remove the two bolts attaching the engine lubricating oil tank drain hole cover plate (fig. 140) to the hull floor and remove cover plate and gasket. Place suitable containers under drain plug openings. Remove drain plug from oil tank and drain plugs and gaskets from each end of engine oil pan. After oil is drained, wipe drain plugs clean and install, using new gaskets as required and tighten plugs. Install drain hole cover plates using new gaskets as required, and tighten bolts.

56. FILLING ENGINE LUBRICATING OIL SYSTEM.

a. **General.** Refer to table of capacities (fig. 30) for viscosity of engine lubricating oil to be used. When completely drained, each engine lubricating oil system has a capacity of 32 quarts. Repeat following operations when filling both engine lubricating oil systems.

b. Filling Engine Lubricating System. Remove lock pin and raise filler cover marked "Lubricating Oil" (fig. 8) at rear of turret on top of hull. Unscrew filler neck cap. Pour 32 quarts of engine oil seasonal grade into filler pipe. Operate engine for 3 minutes at 400 to 450 revolutions per minute. Stop engine and check oil level. Gage on instrument panel must read "FULL." Later production vehicles have a dipstick in filler pipe which can be used to check the accuracy of the instrument panel gage. Pull out stick, wipe clean and insert in tube as far as possible. Pull out dipstick which must show that oil level is up to "FULL" mark. Reinsert dipstick and screw filler cap on tightly. Lower the filler cover and lock in closed position with lock pin.

57. ENGINE LUBRICATING OIL TANKS.

a. Description. The two welded steel lubricating oil tanks are mounted, one on each side, on the floor at forward end of engine compartment. A long filler pipe on each tank extends to its filler opening on top of hull. Tanks in late model vehicles are equipped with a steel measuring tape (dipstick), fitted in a tube inside the filler pipe and accessible when filler cap is removed. These measuring tapes are used to check the accuracy or to supplement the electrically operated oil tank gages. Embossed figures on the tape indicate oil level in the tank. The tight fitting filler cap is non-vented. Creation of unequal pressure is prevented by using a breather hose on each lubricating oil tank. This hose connects the tank with the flywheel housing on its respective engine.

b. Lubricating Oil Tank Gage Units. See paragraph 211.

c. Removal of Lubricating Oil Tank. Remove engine compartment cover plates as a unit (par. 167 **e**). Raise and lock engine compartment splash panel (par. 168 **b**). Remove engine compartment floor plate under engine next to tank to be removed (par. 170 **b**). From below the vehicle, remove lubricating oil tank drain plug cover and remove the drain plug to drain the tank. After tank has drained, install the drain plug. Remove the four bolts, two at each end, which attach tank to hull floor (fig. 141). Remove bolts which attach lower end of tank straps to hull floor. Detach oil supply and return hoses from tank by removing bolts which attach elbows to tank. Disconnect lead wire from starter switch solenoid. From above in engine compartment, remove auxiliary water tank (par. 105 **b**). Disconnect lead wires from lubricating oil tank gage unit and emergency stop solenoid and tag wires. Remove bolt which attaches clip on conduit to sponson cover plate, and pull conduit with disconnected wires out of way behind sponson cover plate. Unscrew fitting on vent hose at top of tank and wire hose up out of way. Loosen lower hose clamp at tank inlet flange. Loosen filler pipe clamp bolt. Take out two bolts which attach filler pipe clamp to sponson cover plate. Lift out clamp and remove filler pipe. Remove bolts from upper end of lubricating oil tank straps and lift out straps. Turn fuel tank selector valve off. When removing right tank, disconnect short fuel supply tube from fuel tank selector valve to tee connection, and the two tubes from the tee connection to the right and left primary fuel filters. Remove the three tubes. When removing left tank, it is necessary to disconnect and remove only the tube from the tee connection to the left primary fuel filter. Remove air inlet housing from blower (par. 89 **b**). Lift tank straight up, and then tilt toward engine to clear fire extinguisher tube and fuel return tube, as tank is removed from engine compartment.

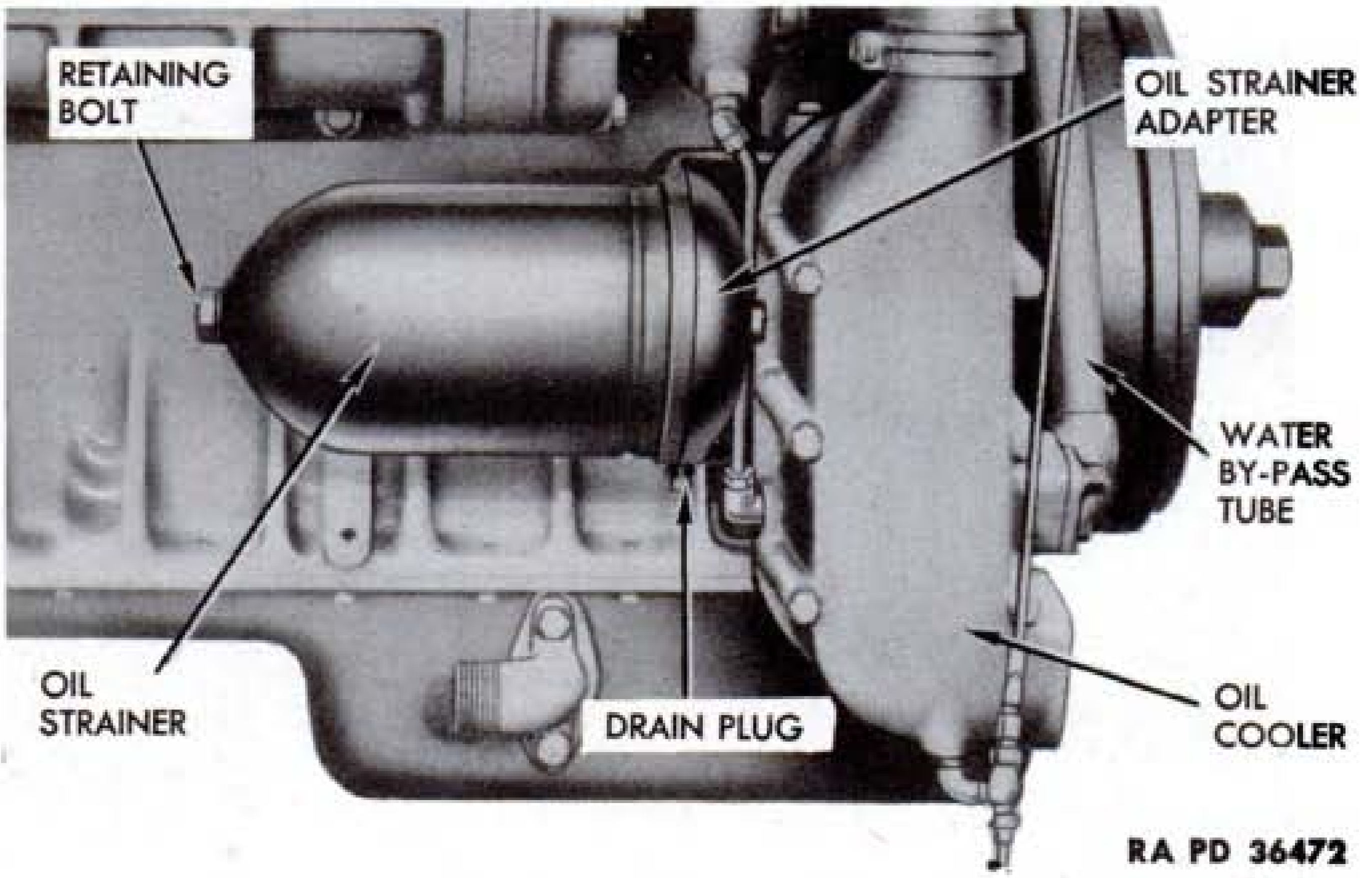

Figure 35—Engine Lubricating Oil Strainer

d. Installation of Lubricating Oil Tank. Install oil tank by reversing the removal procedure. See that spacer in back of tank at top and spacer underneath the tank are correctly positioned. Use new gaskets on both oil tank to oil pan hose elbows and position gaskets with raised edges against oil pan. Fill tank with lubricating oil (par. 56 **b**).

58. ENGINE LUBRICATING OIL STRAINERS.

a. Description. The oil strainer mounted on the oil cooler adapter on each engine (fig. 35) strains carbon particles and dirt out of the oil drawn from the supply tank before it is pumped through the engine oiling system (fig. 34). Oil enters around the outside of the element, is strained through a fine mesh screen and from the inside of the strainer element the oil flows into the oil cooler (fig. 36).

b. Removal of Oil Strainer. Remove engine compartment floor plates and drain lubricating oil tank (par. 55). Remove bolts which attach engine oil outlet hose elbow at side of oil pan to provide clearance to lower the oil strainer. Remove oil strainer drain plug in oil cooler adapter (fig. 36). Unscrew hexagon head retainer at tapered end of strainer housing and pull housing out of oil cooler adapter and remove strainer element.

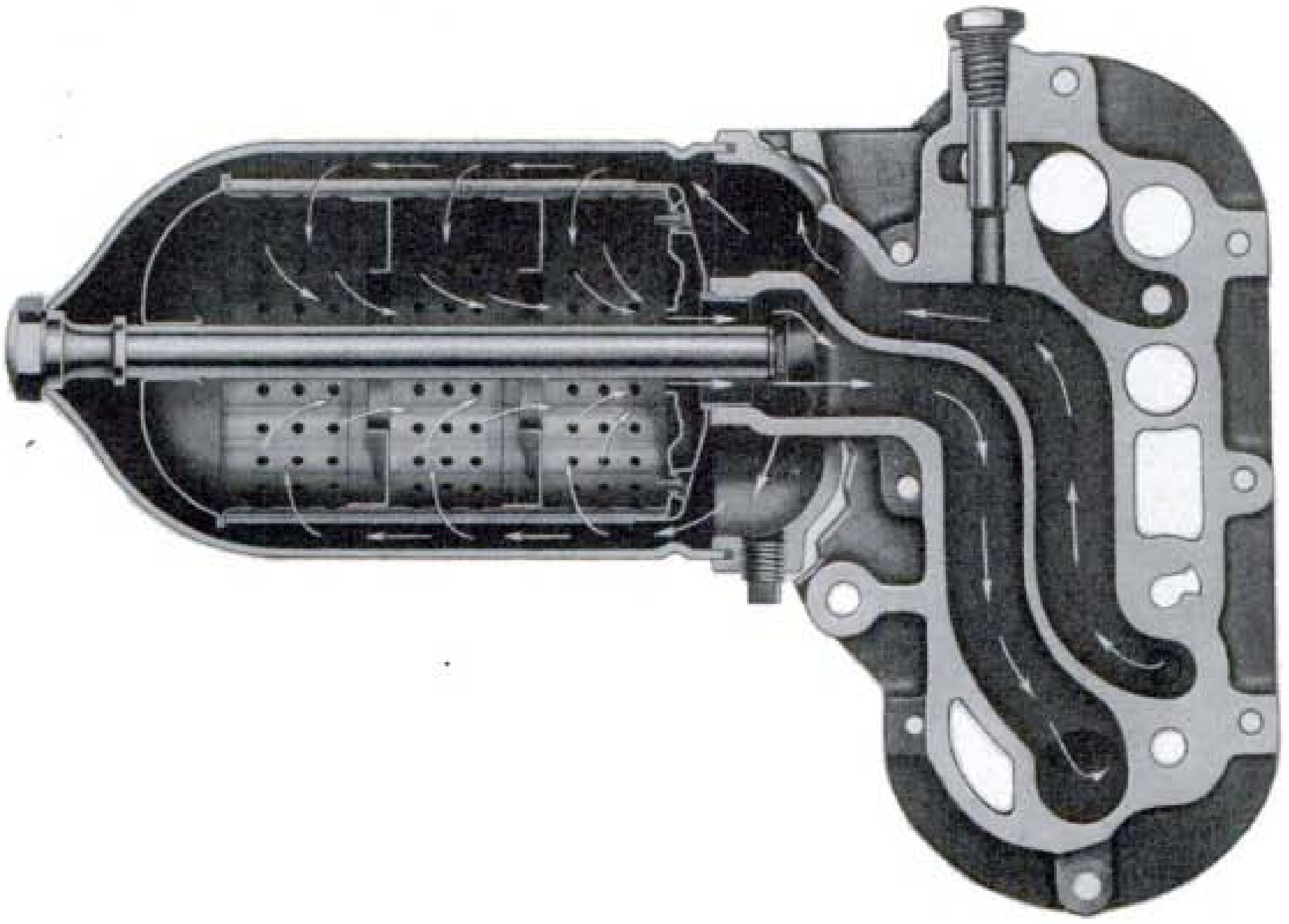

Figure 36—Sectional View of Oil Strainer and Oil Cooler Adapter

c. Cleaning Oil Strainer. Wash strainer element clean in Diesel fuel. Use bristle brush if necessary but with caution to avoid damaging wire mesh. Remove sludge from oil cooler adapter and inside of housing. Wash housing and retainer clean in Diesel fuel. Install drain plug in oil cooler adapter, and tighten.

d. Installation of Oil Strainer. Examine condition of large gasket in the oil cooler adapter housing, and replace if necessary. Enter the tubular end of strainer element in hole in the oil cooler adapter, and push element in as far as possible. Install new gasket on retainer, and insert in housing. Position the housing in oil cooler adapter, and screw retainer in until gaskets are firmly compressed. Position new outlet elbow gasket on engine oil pan with raised edges against oil pan. Attach outlet elbow, and tighten bolts. Fill lubricating oil tank (par. 56 **b**). Start engine, and inspect for oil leaks.

59. ENGINE LUBRICATING OIL COOLERS.

a. **Description.** The oil cooler on each engine serves a dual purpose. It cools the hot engine oil when air temperature is high, and heats the cold oil during engine warm-up period and when the air temperature is low (fig. 45). The oil is forced through a multiple plate cooling unit which is surrounded by the cooling liquid circulating through the engine.

b. **Removal of Oil Cooler.** Drain cooling system (par. 103 **b**). Remove oil strainer (par. 58 **b**). Disconnect water inlet tube from cooler by removing two bolts in the lower flange on the cooler housing. Remove two bolts which hold the flange of the water bypass tube to the cooler. Loosen water pump inlet seal clamp at top of cooler and slide seal and clamp up on elbow. Disconnect water pump drain tube at water pump and cooler housing and carefully remove so as not to bend tube. Remove clip which holds water drain valve rod, remove cotter pin and rod. Unscrew drain valve with nipple and remove elbow. On the engine side of the oil cooler adapter, remove two bolts, one at top and one at bottom, which are screwed into the cooler housing. Remove six cooler housing bolts, holding the oil cooler housing in position while the last two bolts are removed. If cooler housing sticks to the adapter, tap lightly with a mallet. Withdraw cooler housing with care so the oil cooler unit will not drop out.

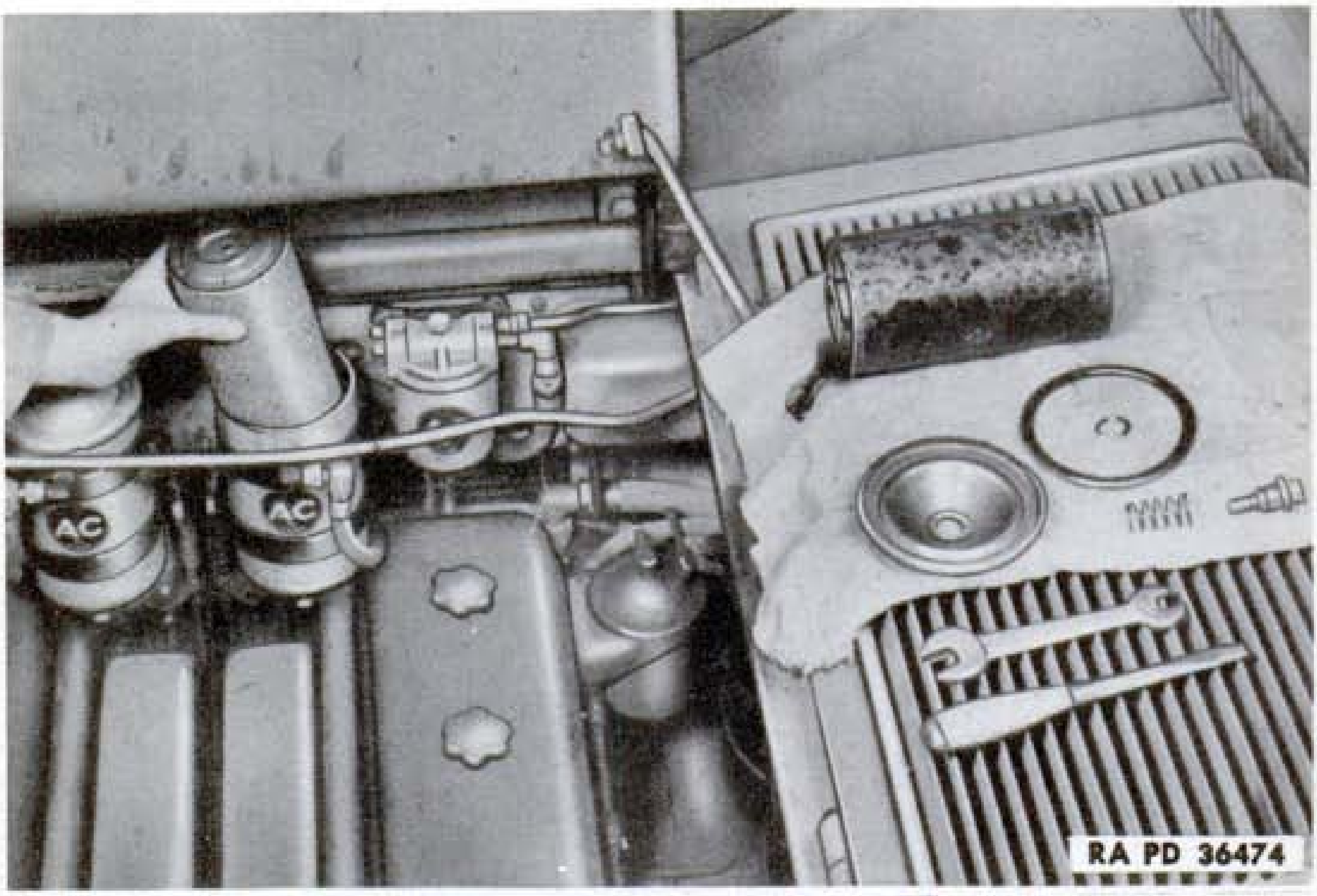

Figure 37—Replacing Engine Lubricating Oil Filter Element

c. Installation of Oil Cooler. Remove old gaskets, and clean all surfaces. Replace water pump inlet seal, sliding the new seal up on water pump elbow and flush with lower edge. Cement new gasket to oil cooler housing, and install the oil cooler assembly in the housing. Cement new gasket to exposed flange of oil cooler assembly. Position the oil cooler housing on the adapter, and assemble by reversing the removal procedure.

60. ENGINE LUBRICATING OIL FILTERS.

a. Description. Two lubricating oil filters, one for each engine, are mounted at the center of the filter panel (fig. 69). Filter elements must be replaced whenever engine oil is changed to help keep the oil clean.

b. Replacing Engine Lubricating Oil Filter Element. Unscrew retainer nut, remove gasket and cover. Lift out spring and element. Place suitable container under filter to catch oil and remove drain plug. Wipe inside of filter shell clean with cloth soaked in Diesel fuel. Install and tighten drain plug. Install new element, and position the spring (fig. 37). Remove old cover gasket, and install new gasket. Position cover and new retainer nut gasket. Screw retainer nut on, and tighten it. Start engine, and inspect for leaks.

c. Removal of Engine Lubricating Oil Filter. Open engine compartment doors, raise and lock splash panel. Place suitable container under filter to catch oil, and remove drain plug. Disconnect inlet hose from elbow on side, near top (fig. 37). Remove elbow from oil filter shell. Install and tighten drain plug. Remove four bolts and washers attaching filter to filter panel. Lay filter on engine. Disconnect outlet hose from elbow at bottom of shell, and remove elbow from filter.

d. Installation of Engine Lubricating Oil Filter. Screw outlet elbow tightly into filter shell at bottom in correct position. Attach outlet hose and tighten. Hold filter in position on filter panel, and install the four attaching bolts with washers and tighten bolts. Install and tighten inlet elbow in correct position in filter shell on side near top. Attach inlet hose and tighten. Start engine and examine for leaks. Stop engines. Lower splash guard, and hook in place. Close and bolt engine compartment doors.

61. ENGINE LUBRICATING OIL PRESSURE GAGES AND WARNING LIGHTS.

a. See paragraph 201 for information on engine lubricating oil pressure gages. Information on low oil pressure warning lights is given in paragraph 193 and for low oil pressure switches in paragraph 206.

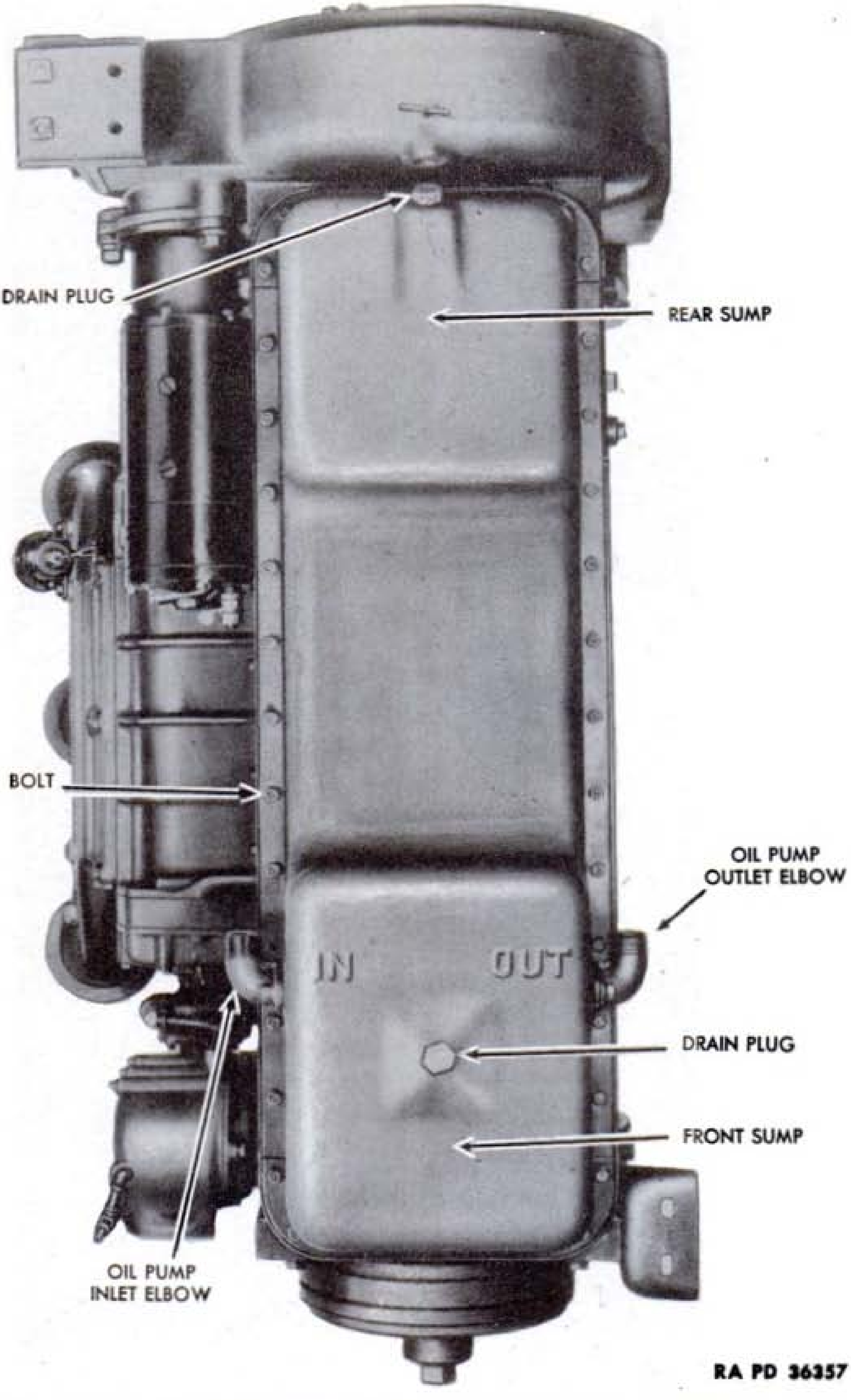

Figure 38—Bottom View of Engine Oil Pan (Dry Sump Engine)

62. ENGINE OIL PANS.

a. Description. A pressed steel oil pan with deep sumps, front and rear, is bolted to the crankcase of each engine (fig. 38). Supply and return connections from the oil supply tanks in the engine compartment are attached at sides of the oil pans.

63. ENGINE LUBRICATING OIL PUMP ASSEMBLIES.

a. Description. The oil pump assembly, located in the bottom of the engine crankcase, consists of three gear-type oil pumps, all driven by the same pump drive shaft. The pressure pump section of the assembly draws oil from the supply tank and forces it through the entire engine oiling system. The other two pumps are scavenging pumps which pump oil out of the two sumps in the oil pan and return it to the supply tank. The center pump draws oil out of the sump beneath the oil pump assembly. The end pump scavenges the sump at the flywheel end of the oil pan.

64. ENGINE LUBRICATING OIL PRESSURE REGULATOR VALVE.

a. Description. The oil pressure regulator valve is bolted to the bottom face of the engine block, inside the oil pan at flywheel end. If pressure in the main oil gallery exceeds 45 pounds per square inch, the regulator valve opens permitting oil to flow directly into the oil pan.

65. CRANKCASE VENTILATION.

a. Description. The engine ventilating system removes water and other vapors from the crankcase, timing gear case, and valve compartment. The condensation of water vapor helps form sludge. In cold weather the sludge freezes and this could block the circulation of the oil. Other vapors condense and form corrosive acids which are harmful to engine parts. A low pressure is maintained in the crankcase by slight leakage of air from the air box past the lower piston rings. From the crankcase the air and vapors pass through the gear train housing into and through the valve compartment and are removed at the governor control housing which is vented by a tube extending nearly to engine compartment floor.

66. ENGINE LUBRICATING OIL LINES.

a. Description. Flexible hoses instead of steel tubes are used where flexing is required in performing maintenance operations or where rigid tubes would be subject to considerable vibration. Brazed steel tubing is used for the more rigid installations (fig. 39).

b. Removal and Installation of Oil Lines. When loosening or tightening the compression fitting on the ends of the tubes or hoses,

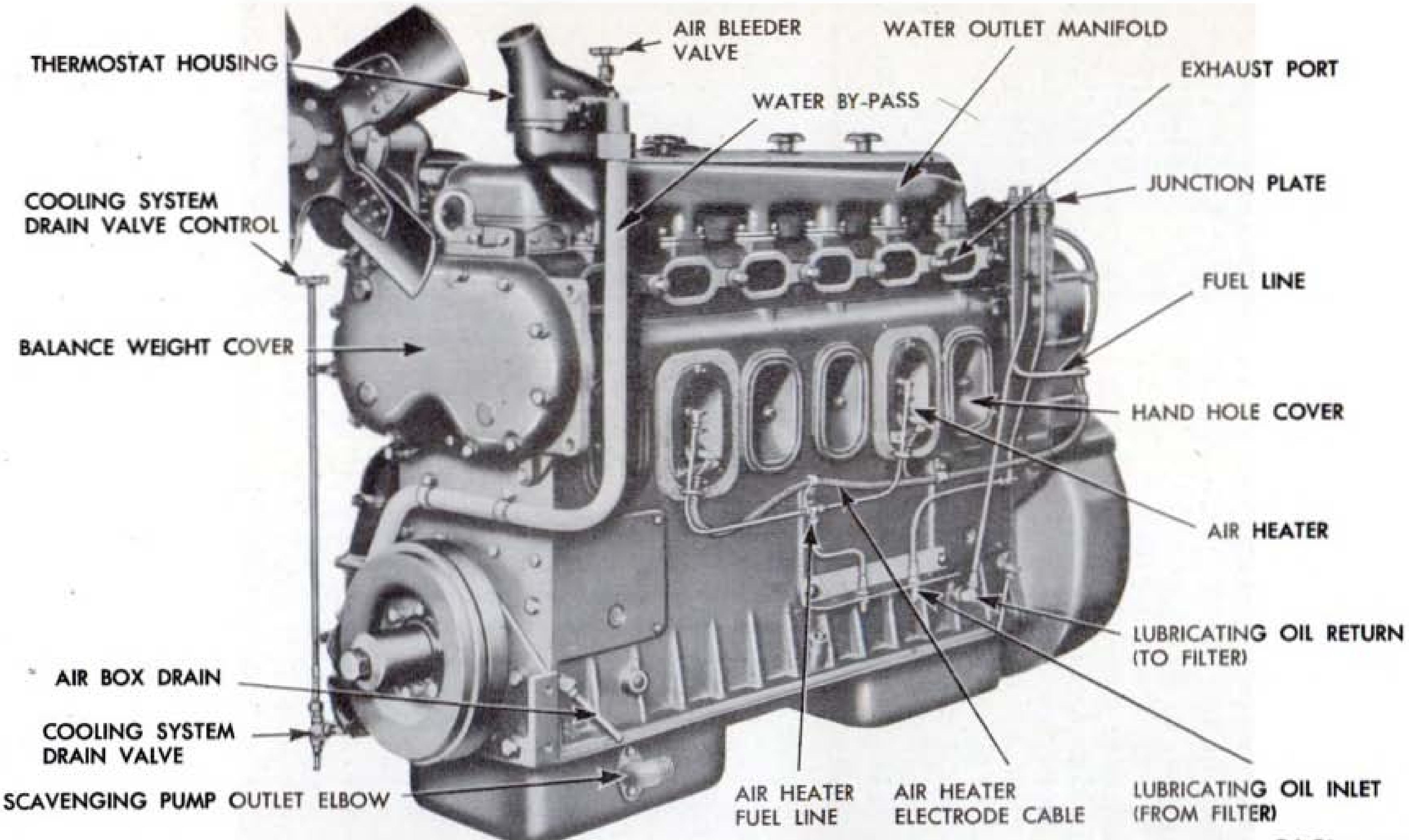

RA PD 36475

Figure 39—Inner Side of Left Engine

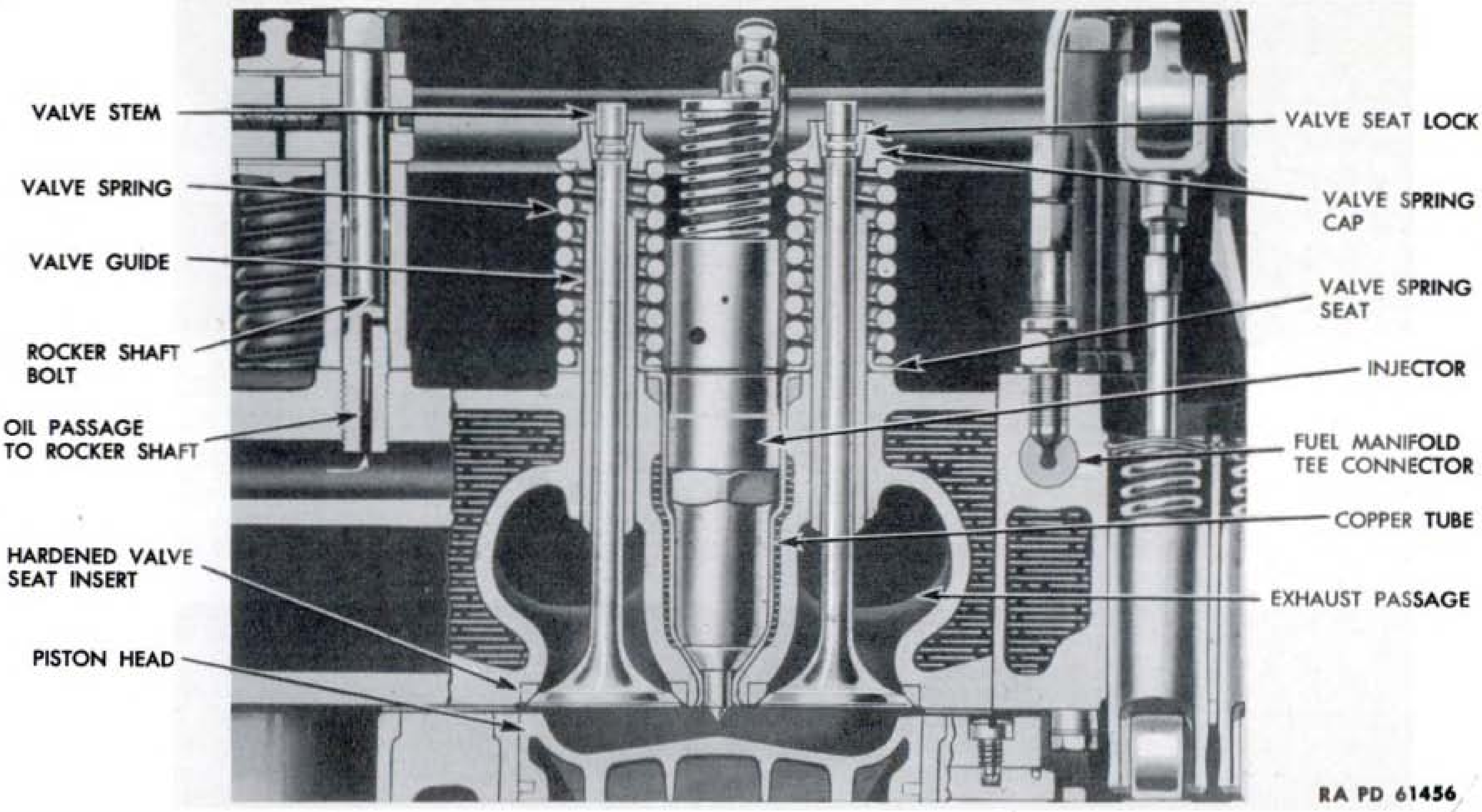

Figure 40—Sectional View of Cylinder Head Showing Injector and Exhaust Valves

hold the nipple, elbow or bushing from turning. Use tight fitting end wrenches to prevent rounding the corners on the connections. Protect the open fittings and ends of the disconnected lines with tape to prevent dirt from entering lubricating system or lines or getting into the threads on the fittings. Avoid bending the steel lines to provide access to other units by removing the line where practical. Before installation make sure the threads and packing glands are clean and free of dirt particles. Spring the tubes or bend the hoses to start the threads squarely to avoid cross threading. Use sufficient pressure when tightening connections to prevent leaks, but avoid overstressing the threads or connections.

c. **Replacement of Oil Lines.** Replace all damaged hoses as complete prefabricated assemblies. Tape may be used to effect temporary emergency repairs but is short-lived and may soon leak, and cause loss of oil. When possible, replace steel tubing with preformed tube assemblies. When necessary to make replacement from bulk lengths, first measure the developed length of the tube to be replaced. Cut the new tube of sufficient length to allow for bends. Use extreme care in bending new tubing to avoid kinking. In many cases bends can be made with a larger radius than used in forming the original tube. After the tube is fitted, dress both ends off squarely with a file. Remove burs on inside and outside of tube. Place the correct compression fittings or packing glands on each end of the tube. The ends of the tube are now ready to be double lap flared if this type of connection was originally used. The fuel line flaring tool (41-T-3140) is used to duplicate the original double lap flare. Follow specific instructions in the lid of the tool box.

67. FUEL INJECTION SYSTEM.

a. **Description.** Diesel fuel is supplied to the cylinders by a direct injection system with an injector mounted between the two exhaust valves in each cylinder (fig. 40). The injectors are operated by rocker arms similar to the exhaust valve rocker arms and actuated by push rods operated by the same camshaft. For the method of supplying fuel to the injectors refer to paragraph 87 **b**. The amount of fuel supplied to the cylinders is controlled by linking all six injector racks to levers on a single control tube (fig. 43). The control tube on each engine is connected, through a governor, to the throttle linkage and the speed of the engines is controlled by the single throttle or by the accelerator.

68. FUEL INJECTORS.

a. **Description** (fig. 41). The fuel injectors force accurately measured quantities of Diesel fuel into the cylinders under tremendous pressure at precisely the right time for the cylinders to fire.

The fuel is injected through small holes in the injector tip in finely atomized spray for instant combustion. The injector plunger has a helical groove near the lower end and a gear near the upper end which meshes with the teeth in the injector rack. Moving the rack in or out changes the position of the helical groove in relation to the fuel ports in the injector plunger bushing and thus accurately controls the amount of fuel injected at each stroke. The maximum amount of fuel is injected when the control lever end of the rack is pushed into the injector body as far as possible. When the rack is

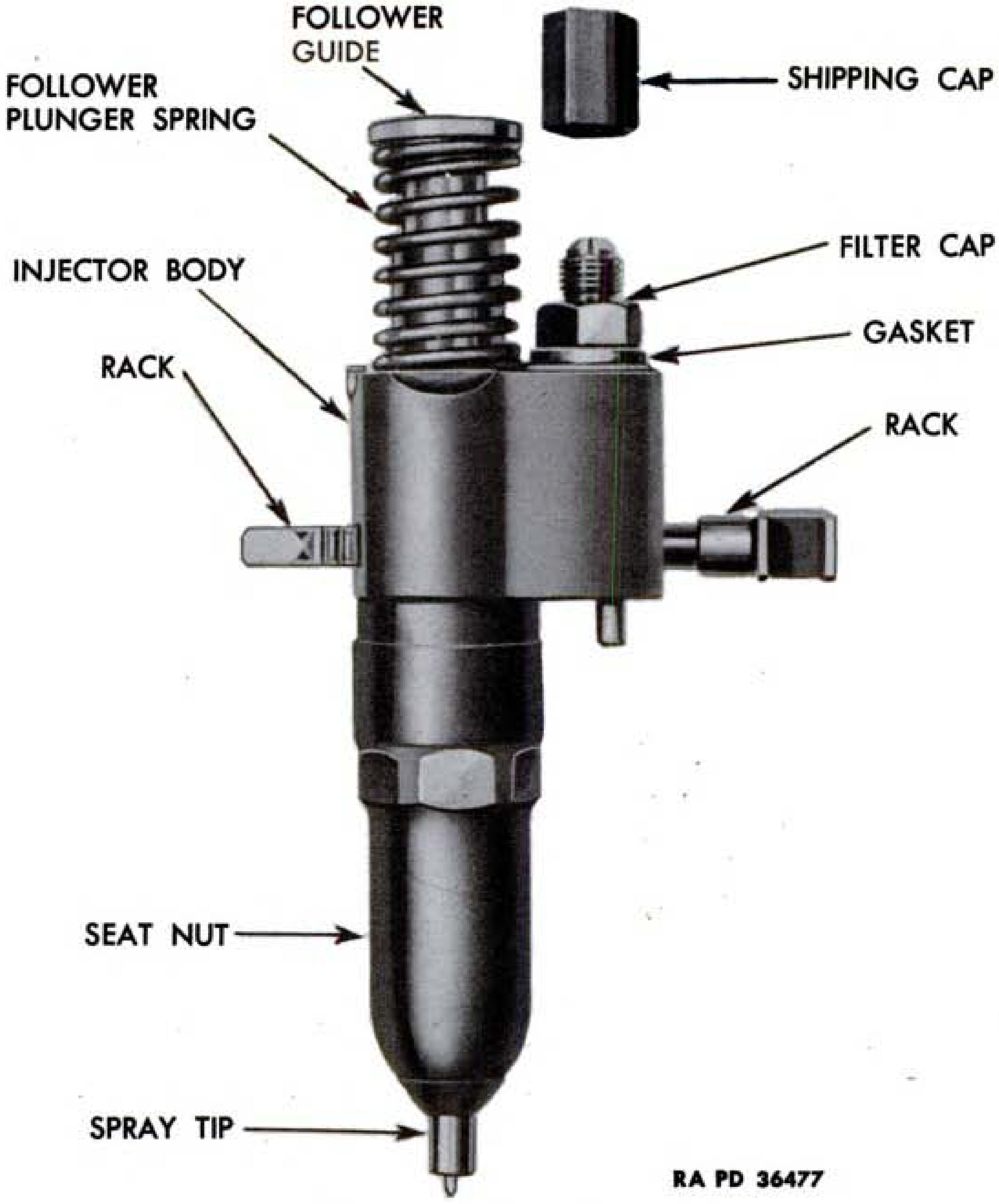

Figure 41—Fuel Injector

pulled all the way out no fuel is injected. The old type injector, with spherical check valve, identified by the letter M stamped in the body is being reworked, when overhauled, or replaced by the later type injector, with flat type check valve, identified by a small green enameled label with "Figure 80" pressed into the body of the injector. If the injector has a spray tip marked "7-006-155-0" it has the flat type check valve.

b. Testing Fuel Injectors. With engines stopped, place throttle in "IDLING" position and turn the fuel tank selector valve to LH or RH. Lock out both clutches. Remove rocker arm cover (par. 82 **b**). Start the test on the cylinders which have both exhaust valves closed. With a heavy screwdriver press down on the injector follower until the injector "pops." If the injector has a sharp, firm "pop," and produces a slight chirping noise it is probably in good condition. The later type injectors with the small green label will "pop" with much less effort and without the chirping sound. Crank the engine as required to close the exhaust valves in the other cylinders and complete the test. Replace any injectors that are unusually weak or fail to "pop." A small accumulation of carbon on the tip is normal, and does not denote a faulty injector. As a further check, which should be made on all cylinders, start and run the engine at idling speed. Hold down on the injector follower with a screwdriver to shut off the injector. If there is no change in the operation of the engine it is a further indication that the injector is not firing. Also completely loosen both adjusting nuts so the injector rack can be moved freely in and out. Hold the rack all the way in. This cylinder should then fire with a sharp loud fuel knock. If the injector in the cylinder being tested was found to be normal by the "popping" test and fails to fire with the injector rack all the way in, it indicates that the trouble is probably due to loss of compression caused by faulty valves, piston, rings or improper valve adjustment. Replace any defective injectors (par. 68 **f**). Correct the injector rack setting (par. 71 **b**) and if this is not the cause of the trouble refer to Trouble Shooting, Power Unit (par. 44 **b**). After injectors have been tested install the rocker arm cover (par. 82 **e**).

c. Timing Fuel Injector. Remove rocker arm cover (par. 82 **b**). Make sure throttle is in "NO FUEL" position. Crank engine with starter until exhaust valves in cylinder whose injector is being timed are fully open. Place injector timing gage (41-G-198-50) in timing gage hole in the top of the injector body, with shoulder on gage stem seated on injector body, and with one of the two milled flats on gage facing the injector follower guide (fig. 42). Use wrench to hold push rod from turning and loosen lock nut with push rod lock nut wrench (41-W-1986-200). Screw the push rod to adjust it so that when shoulder on gage stem is seated on injector body the bottom face of

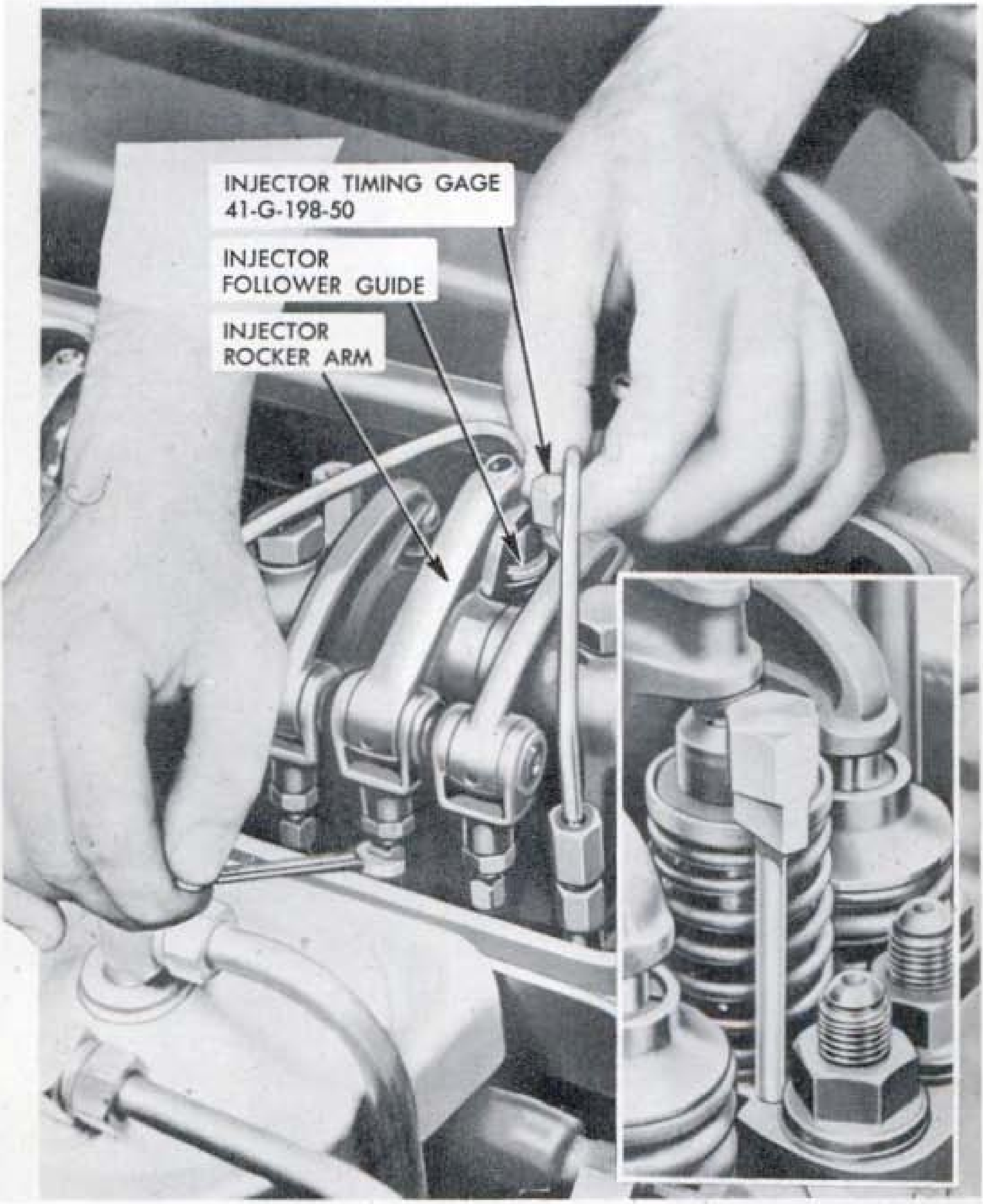

RA PD 61457

Figure 42—Timing Fuel Injector—Inset Shows Injector Timing Gage (41-G-198-50) in the Checking Position

head on timing gage, when rotated, will just pass over the surface of the injector follower guide with no perceptible clearance (fig. 42). Tighten lock nut on push rod, and again check the setting with the timing gage. Repeat the above operations to time each injector. Install rocker arm cover (par. 82 **c**).

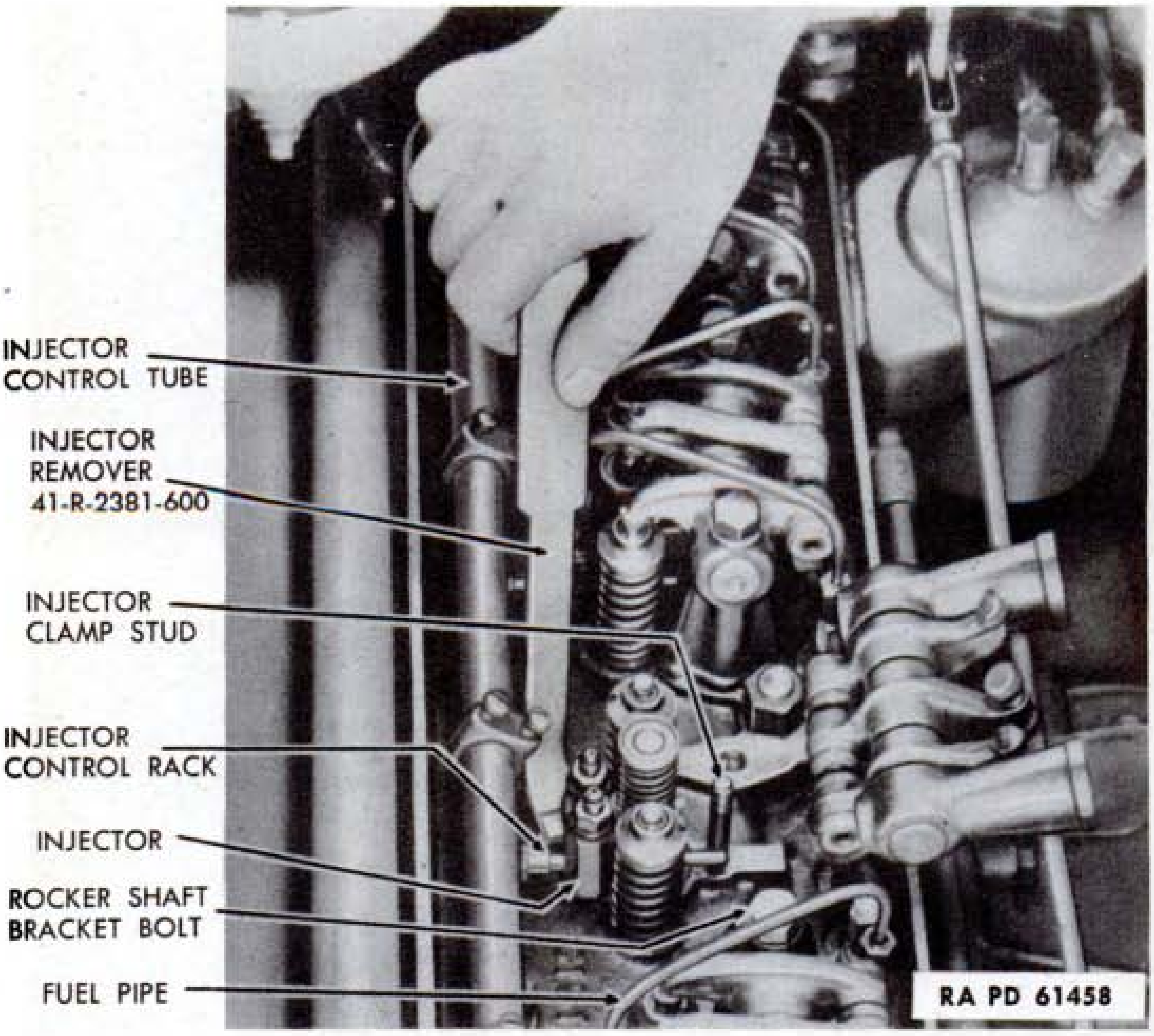

Figure 43—Removing Fuel Injector

d. Removal of Fuel Injector. Turn tank selector valve to "OFF". Remove rocker arm cover (par. 82 **b**). Disconnect both fuel lines from injector. Loosen fittings on fuel connectors and move fuel lines outward to clear the rocker arm shaft. CAUTION: *Cover the fuel feed openings on the injector with shipping caps if available, or with tape, to prevent dirt entering injector.* Loosen both rocker arm shaft bracket bolts evenly until they are free of cylinder head. Tip rocker arms and shaft over toward outside of engine. Remove nut, washer and injector clamp from hold-down stud. With injector remover (41-R-2381-600) pry injector up evenly while guiding rack over end of rack control lever (fig. 44). Remove injector and cover hole in cylinder head.

e. Inspection of Fuel Injector. Should a visual inspection reveal a burned injector tip, clogged holes, excessive wear or any other defect, replace the injector. If one or more injector tips have been burned due to a runaway engine, all the other tips will have enlarged holes or be weakened and the injectors should be replaced. All the injectors in any single engine should be of the same type unless in an emergency it is necessary to temporarily mix the two types which will cause a noticeable difference in power and performance at higher speeds and make it difficult to tune the engine. The injector rack must move freely in and out without excessive play. Blow-by or leaks around the injector body must be referred to higher authority as it may be necessary to replace the cylinder head assembly.

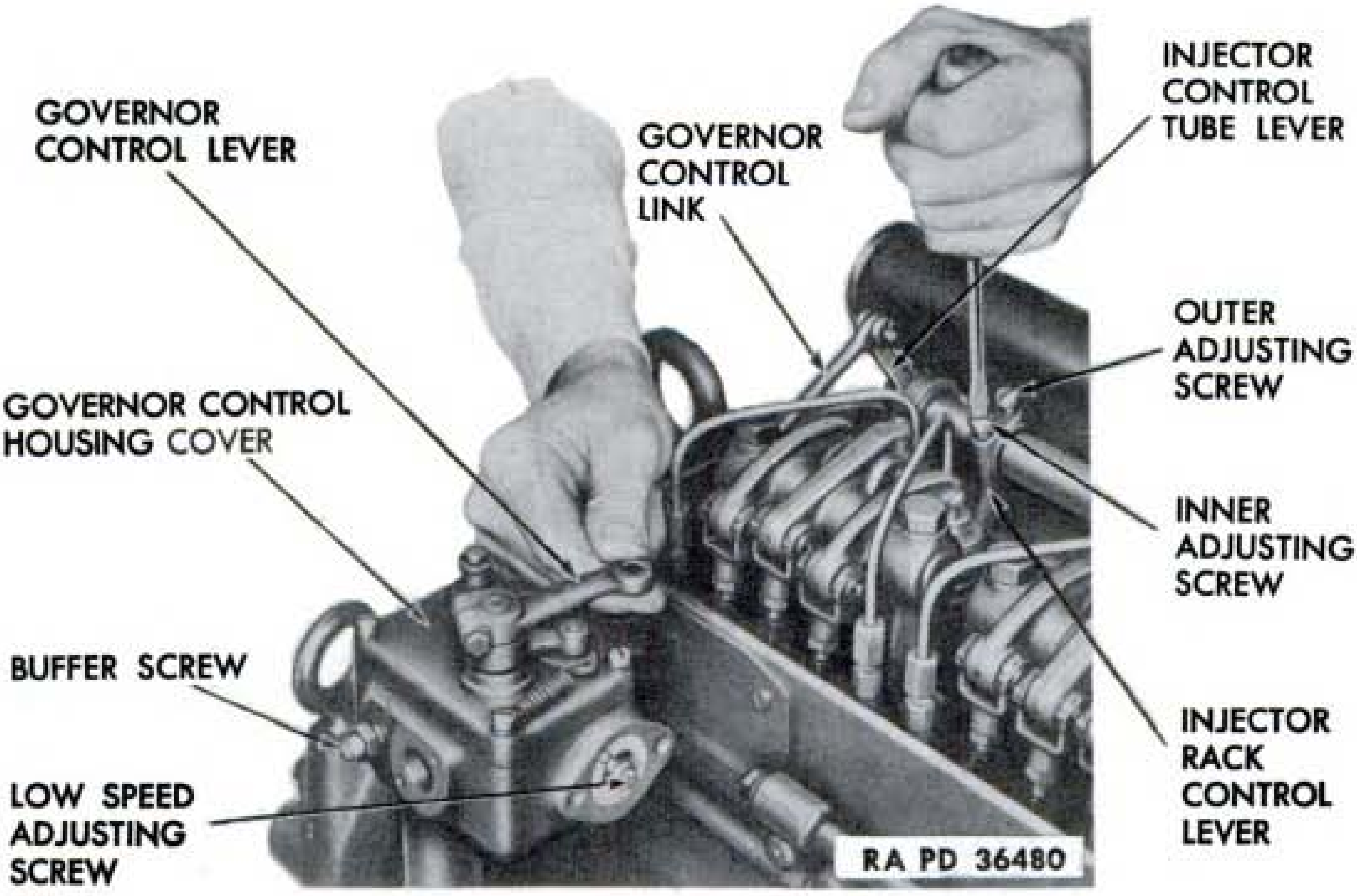

Figure 44—Positioning Injector Rack

f. Installation of Fuel Injector. Make certain the body nut of the injector to be installed and the copper injector hole tube are perfectly clean. Remove covering from injector hole. Insert injector in tube and position body so dowel pin in bottom of injector body enters hole in top of cylinder head and lightly tap injector into place while guiding injector rack over end of control lever. Install injector clamp, special washer and nut on hold-down stud and tighten nut, using not more than 25 foot-pounds pull on torque wrench. CAUTION: *Tightening the injector hold-down clamp more than the recommended amount can cause faulty injector operation.* Position rocker arm assembly, and tighten bracket bolts evenly so as not to spring the push rods. Remove caps or covering from injector fuel line fittings. Connect both fuel pipes to injector and tighten fittings at injector and fuel connectors. CAUTION: *All fuel connections must be tight to prevent damage to engine resulting from Diesel fuel leaking into the crankcase and diluting the lubricating oil.* Position injector rack control lever (par. 68 **g**). Time the injector that was installed (par. 68 **e**). Start engine and warm up to 100°F and while engine is running inspect all fuel connections for leaks. Adjust exhaust valves on cylinder in which injector was installed (par. 83). Install rocker arm cover (par. 82 **c**).

g. Positioning Injector Rack. The following procedure covers the positioning of a single injector rack control lever when only one injector has been removed and installed in the engine. When more than one injector has been removed and installed, follow the procedure given in paragraph 71 **b**. Remove rocker arm cover (par. 82 **b**). Disconnect throttle lever link from governor control lever. Push against and hold the governor control lever to position the injector racks all the way in which is the "FULL FUEL" position. Slightly loosen both adjusting screws on top of injector rack control lever which operates the injector that was replaced. Screw down the inner adjusting screw, the one nearest rocker arms, until the injector rack moves in and strikes bottom and the other racks just start to move out (fig. 44). Next, tighten the outer adjusting screw on injector control tube lever, then lock the inner screw. After positioning the rack control lever, check to see that no other rack has moved out. This can be done by prying inward on each of the other injector racks with the tip of a screwdriver using the control tube as a fulcrum. If any of the injector racks can be moved in, the end of the lever being positioned was set too far toward the injector and must be readjusted by backing off on the inner adjusting screw and tightening the outer adjusting screw. Shoulders on all injector racks must extend approximately 7/8-inch away from injector bodies when governor control lever is held in the "NO FUEL" position and injector control tube lever is pushed down beyond its "NO FUEL" position (fig. 44). Connect throttle lever link to governor control lever.

69. INJECTOR CONTROL TUBES.

a. Description. The injector control tube is mounted on ball bearings in two control tube brackets, one at each end (fig. 45). The six rack control levers on each control tube which are linked to the injector racks are individually adjustable so that the rack setting for each injector can be adjusted independently of the others. A coil spring placed over the lever end of the control tube maintains a twisting force on the tube to hold the injector racks in "NO FUEL" position, unless the throttle is positioned otherwise. The injector control tube is operated by the control tube lever, at fan end of tube, which is linked to the governor control lever.

b. Removal of Injector Control Tube. Remove rocker arm cover (par. 82 **b**). Pull out cotter pin, and remove clevis pin and disconnect injector control tube link at injector control tube lever. Remove two bolts which attach each control tube bracket to cylinder head and lift out control tube and bracket assembly (fig. 45).

c. Disassembly of Injector Control Tube. If the control tube is to be replaced, the injector rack control levers must be taken off the tube removed and installed on the new tube. Slide bracket off end of tube opposite control lever end. Unscrew the adjusting screws on top of each injector rack lever sufficiently to permit levers to slide but do not remove screws. Slide the levers, return spring and tube bracket off the tube. Remove bearing from each control tube bracket by tapping on bearing outer race.

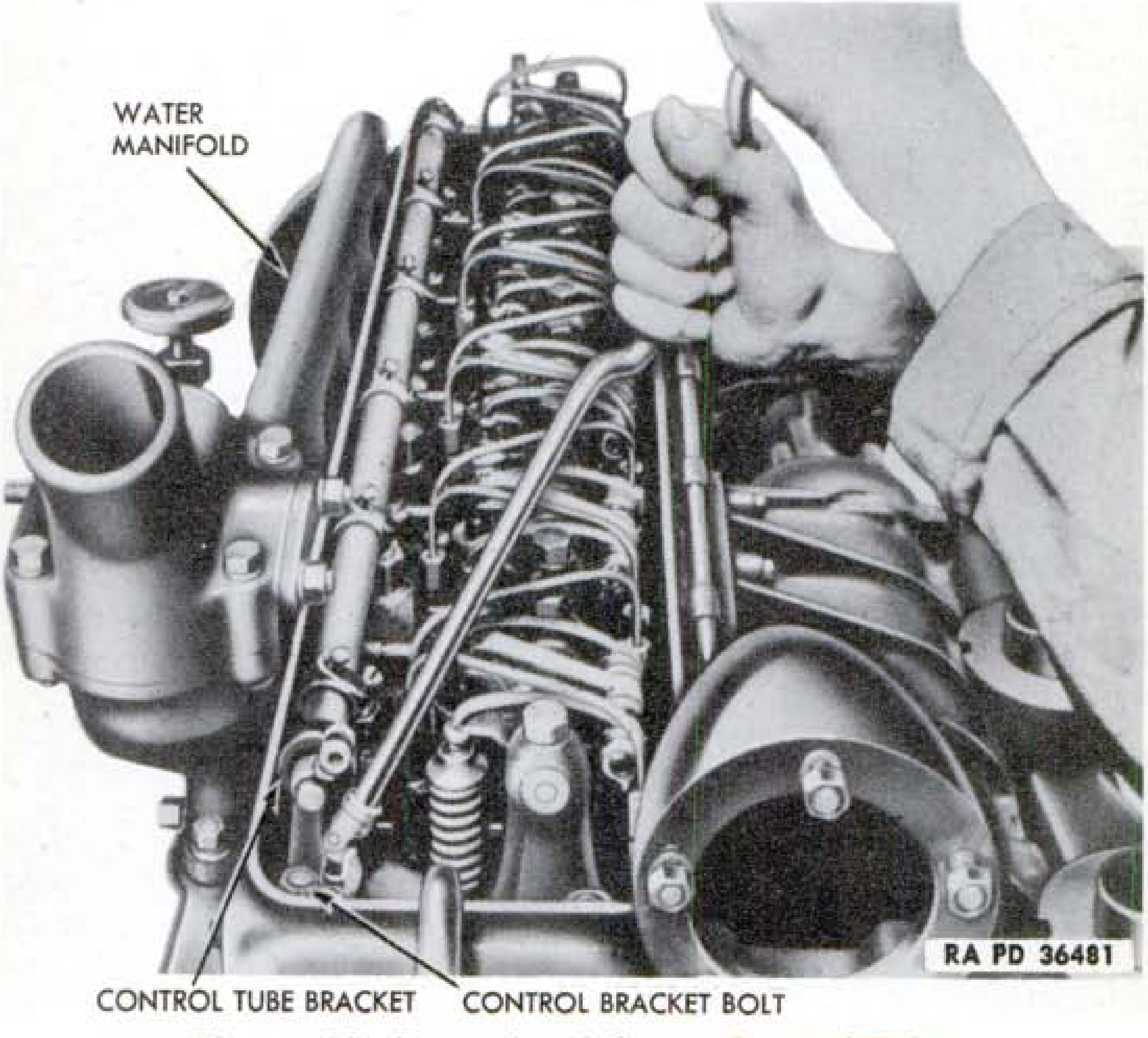

Figure 45—Removing Injector Control Tube

d. Inspection of Injector Control Tube Parts. Clean and carefully inspect bearings and test for excessive play. Replace rough or worn bearings.

e. Assembly of Injector Control Tube. Install bearing in each control tube bracket by tapping on outer race. Slide bracket with bearing over tube and against control tube lever with foot on bracket facing control tube lever. Position spring over tube and against bracket with long end of spring away from bracket. Slide levers on tube, one at a time, so that ends of levers will extend toward the injectors when assembly is installed on the cylinder head. Center the levers over the adjusting screw notches in shaft and move back and forth while turning down adjusting screws to make sure that screws enter the notches in tube. Do not tighten adjusting screws. Install other control tube bracket with foot extending toward flywheel end of engine.

f. Installation of Injector Control Tube. Work each injector rack in and out to make sure it works freely. Lower control tube and bracket assembly into position. Beginning at one end of control tube move each injector rack as required to engage each rack control lever in notch in rack. Install bolts with lock washers in control tube bracket bolts. Operate control tube by hand while tightening bracket bolts to make sure that there is no binding of control tube in the bearings after bracket bolts are tight. Pull on end of control tube return spring, and hook it over the adjacent rack control lever. Connect injector control tube link to injector control tube lever with clevis pin. Insert and spread cotter pin. After the control tube has been installed, it may be necessary to loosen the control lever adjusting screws slightly to permit shifting the levers on the tube. Each lever must be perfectly alined with its injector rack so as not to bind the rack. Adjust the fuel injector rack control levers (par. 71 c). Install rocker arm cover (par. 82 c).

70. GOVERNORS.

a. Description. Each engine is equipped with a spring and weight type mechanical governor (fig. 32). The governor controls the idling speed of the engine up to approximately 400 revolutions per minute and limits the maximum speed. The governor shaft is splined to, and driven by the blower upper rotor shaft.

b. Removal of Governor. The governor usually is removed as two subassemblies—the governor control housing and the governor weight housing. If their removal or adjustment is necessary, notify higher authority.

71. INJECTOR RACK ADJUSTMENTS.

a. Importance of Accurate Adjustments. The governor and injector racks must be accurately adjusted to obtain correct engine performance and maximum power output. Each fuel injector rack control lever must be accurately adjusted to position all injector racks uniformly so that equal power will be developed in each cylinder, and the positioning of the racks will be correct in relationship to the governor. All adjustments must be made in the order given in the following procedure.

b. Adjustment of Fuel Injector Rack Control Levers.

(1) ADJUST RACK CONTROL LEVER FOR INJECTOR IN NO. 1 CYLINDER. Back off several turns on both adjusting screws on top of each injector rack control lever. CAUTION: *Examine the end of each rack control lever to see that face of boss does not touch the side of rack and bind the rack.* Tap the lever slightly to move it on control tube to provide sufficient operating clearance. Adjust rack control lever for injector in No. 1 cylinder, the one closest to the governor, as follows: Push against and hold the governor control lever to position the injector racks all the way in which is the "FULL FUEL" position. Screw down the inner adjusting screw, the one nearest the injector, on rack control lever and watch the idle adjusting screw which will move outward slightly when a definite increase is felt in the effort required to turn the control lever adjusting screw. Back off 1/3 turn on the inner adjusting screw. Turn down the outer adjusting screw to lock, then lock the inner screw.

(2) CHECK ADJUSTMENT OF RACK CONTROL LEVER FOR INJECTOR IN NO. 1 CYLINDER. To check the rack control lever adjustment see that the governor control lever moves smoothly from idle to "FULL FUEL" position which is where the cam lever pin is at extreme end of slot farthest from control cam pivot. If suddenly increased effort is required to move the governor control lever as it nears the end of its travel, the rack control lever operating the injector in No. 1 cylinder is positioned too far toward the injector. Correct the rack control lever position, if necessary, by backing off slightly on inner adjusting screw and tightening the outer adjusting screw to lock. Recheck by again moving governor control lever from idle to "FULL FUEL" position. Next hold the governor control lever in "FULL FUEL" position with one hand and push down firmly on the injector control tube lever with the other hand. The rack on injector in No. 1 cylinder must move slightly outward (1/64 to 1/32 inch) before an increase in force is required and before the idle adjusting screw on the governor housing begins to move outward. If the rack moves out more than 1/32 inch, back off slightly on the rack control lever outer adjusting screw and tighten the inner screw to lock.

(3) ADJUST RACK CONTROL LEVERS FOR INJECTORS IN OTHER CYLINDERS. Pull injector control tube lever up to hold rack for injector in No. 1 cylinder all the way in "FULL FUEL" position and adjust rack control lever for injector in No. 2 cylinder by slowly turning the inner adjusting screw only until the injector rack moves in and is felt to "strike bottom" but does not cause perceptible outward movement of rack in injector in No. 1 cylinder. This method is used to insure uniform setting of all racks. Then tighten outer screw,

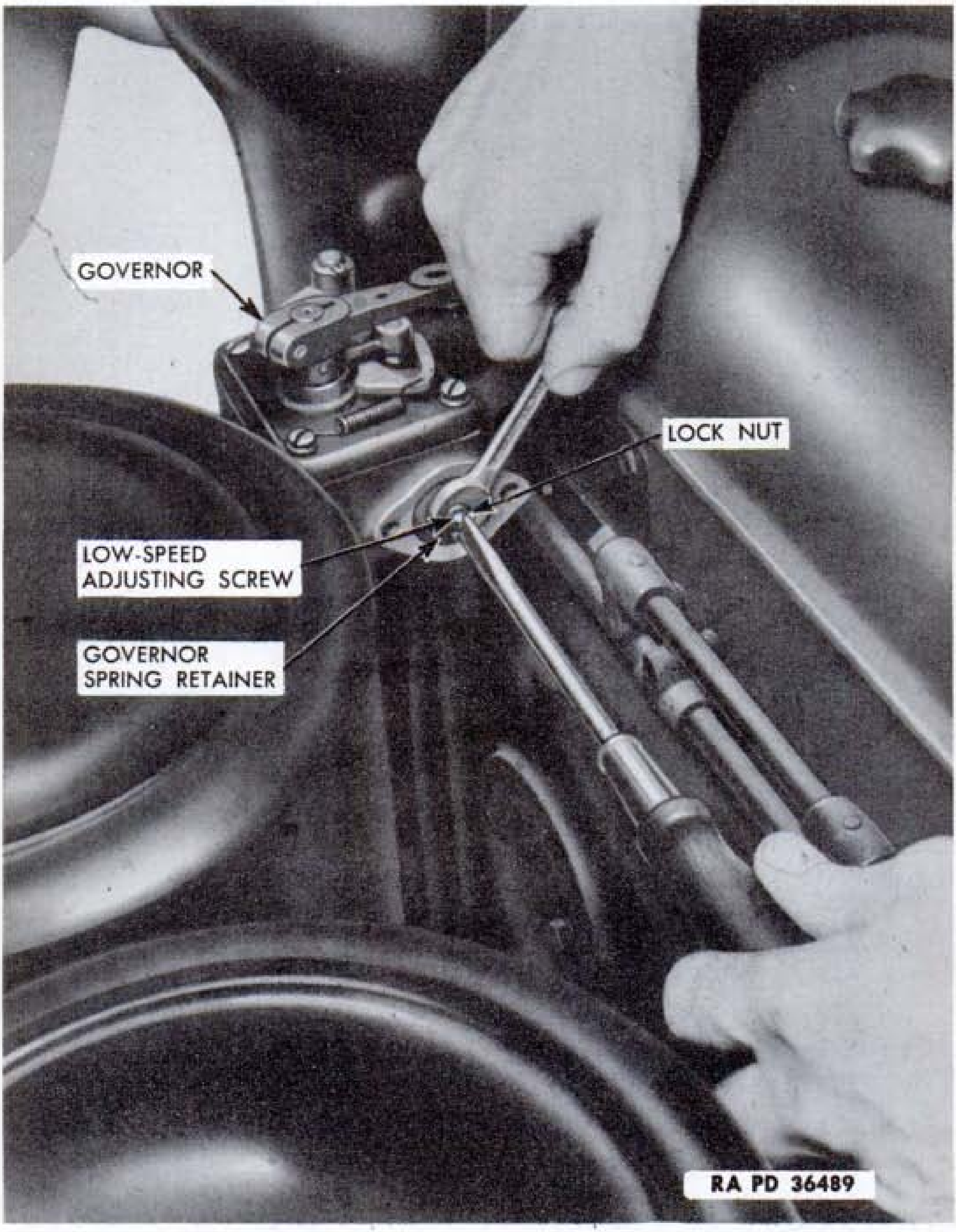

Figure 46—Adjusting Engine Idling Speed

and lock inner screw. Using the same procedure, adjust each of the remaining four rack control levers in turn always watching that rack in injector for No. 1 cylinder does not move outward when each rack control lever is being adjusted.

(4) CHECK "NO FUEL" POSITION OF INJECTOR RACKS. Hold the governor control lever in "NO FUEL" position. Watch the position of the injector racks and push down on the injector control tube lever. The racks must move outward $\frac{3}{16}$ of an inch and in this position the distance from the shoulder on the rack to the injector body must be approximately $\frac{7}{8}$ inch. Attach throttle control link to governor control lever, and hook retracting spring in position.

(5) ADJUST ENGINE IDLING SPEED. Loosen lock nut and back out the buffer screw on outer side of governor housing (fig. 46) until it projects $\frac{5}{8}$-inch from governor housing. Start engine and run at 800 to 1,000 revolutions per minute to warm to operating temperature. Set throttle in "IDLING" position. See that pin on governor cam lever is in idling notch in slot in control cam on governor housing. If engine runs unevenly or "rolls" when thoroughly warm, gradually turn buffer screw in until engine runs smoothly, or nearly so. Then turn the idle adjusting screw as required to obtain an average idling speed of 400 to 450 revolutions per minute and tighten lock nut. Reset buffer screw, if necessary, to bring the idle roll to a minimum. Do not turn buffer screw to increase idling speed more than 20 revolutions per minute or it may not be possible to stop the engine with the throttle. Tighten buffer screw lock nut (fig. 44).

(6) INSTALL ROCKER ARM COVER. Follow procedure in paragraph 82 **c** and install rocker arm cover.

72. THROTTLE AND ACCELERATOR LINKAGE ADJUSTMENT.

a. Description of Throttle and Accelerator Linkage Adjustment. The Diesel engines are stopped by moving the throttle into "NO FUEL" position. Therefore maximum travel is provided to move the governor control lever into "NO FUEL" position. A complete adjustment of the throttle and accelerator linkage must be made whenever it has been disassembled to make other repairs or when linkage parts are replaced, or when noticeable slack has developed in the linkage (fig. 47). In such cases only a major linkage adjustment will insure that all the rods and cables are adjusted to proper length to correctly position all levers when the throttle lever is in "NO FUEL" position. It is important that the adjustments be made in the order given.

b. Before Adjustment Procedure. Raise driver's and assistant driver's seats to uppermost position, or if additional working space is desired, remove driver's seat (par. 173 **b**). Remove covers from front and rear ends of propeller shaft housing (par. 123). Remove

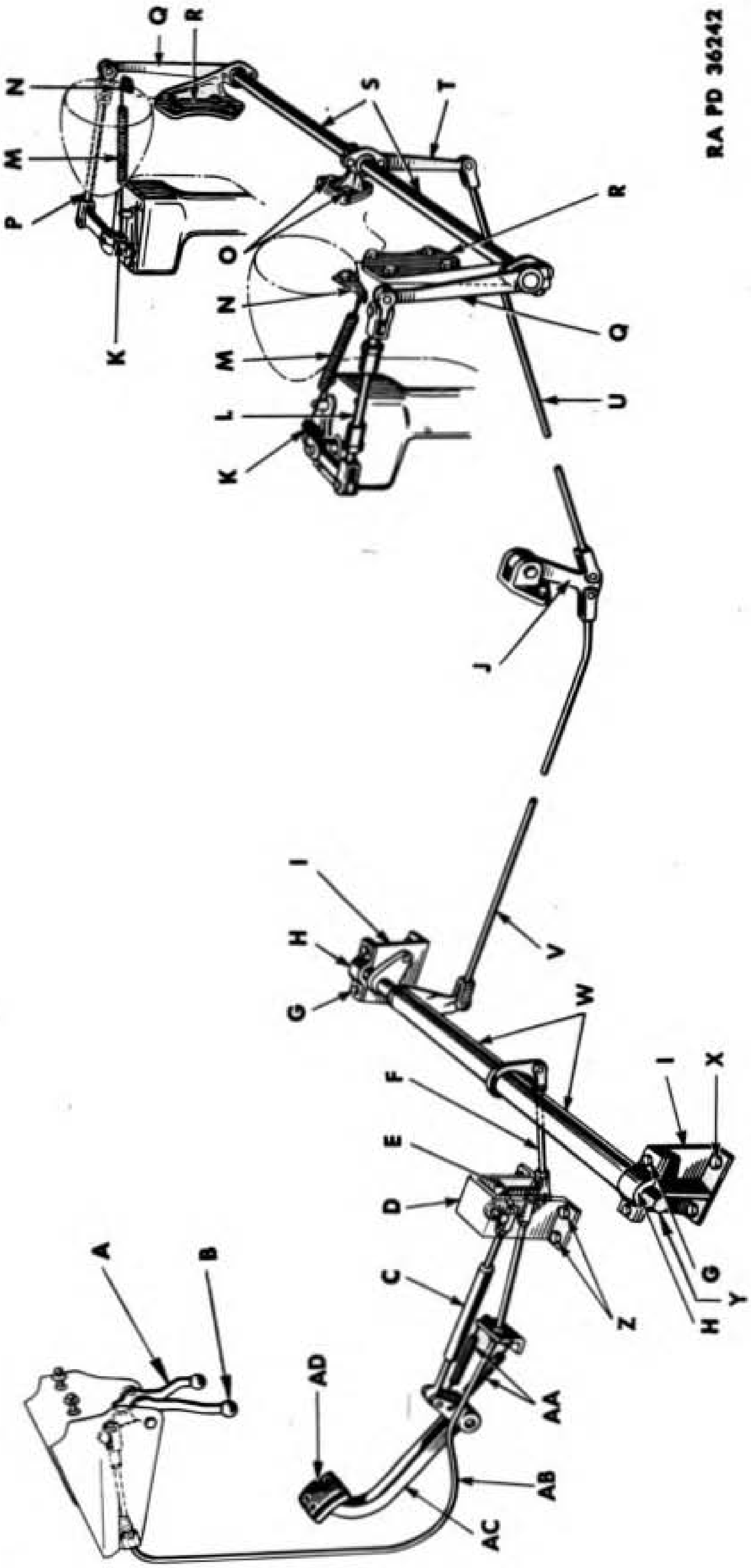

Figure 47—Throttle and Accelerator Linkage

A—THROTTLE LOCK
B—THROTTLE
C—THROTTLE CONTROL CYLINDER ASSEMBLY
D—THROTTLE CONTROL JUNCTION LEVER BRACKET
E—THROTTLE CONTROL JUNCTION LEVER
F—THROTTLE CONTROL LINKING ROD
G—BOLT
H—CLUTCH IDLER BRACKET CAP
I—CLUTCH IDLER SHAFT BRACKET
J—THROTTLE CONTROL ROD IDLER LEVER AND BRACKET ASSEMBLY
K—RETRACTING SPRING CLIP
L—THROTTLE ADJUSTABLE LINK ROD
M—GOVERNOR LEVER RETRACTING SPRING
N—GOVERNOR LEVER RETRACTING SPRING BRACKET
O—BOLTS
P—THROTTLE LINK ROD—FIXED
Q—ENGINE CROSS SHAFT GOVERNOR LEVER
R—ENGINE CROSS SHAFT BRACKET
S—ENGINE CROSS SHAFT ASSEMBLY
T—ENGINE CROSS SHAFT CENTER LEVER
U—THROTTLE CONTROL ROD ASSEMBLY—REAR
V—THROTTLE CONTROL ROD ASSEMBLY—FRONT
W—THROTTLE IDLER SHAFT ASSEMBLY
X—BOLT
Y—CLUTCH IDLER SHAFT
Z—BOLTS
AA—ACCELERATOR PEDAL RETRACTING SPRINGS
AB—THROTTLE CONTROL CABLE
AC—ACCELERATOR PEDAL
AD—ACCELERATOR PEDAL PAD

RA PD 36242B

Legend for Figure 47—Throttle and Accelerator Linkage

driver's seat floor plate (par. 174 **b**). Unbolt throttle junction lever bracket from hull floor. Remove cotter and clevis pins from throttle cable yoke, accelerator rod clevis and throttle idler shaft connecting rod clevis at junction lever. Temporarily bolt throttle junction lever bracket back into position on hull floor, tightening one bolt on each side. This will permit throttle cables and junction lever to be correctly positioned.

c. Adjust Throttle Lever Cable at Throttle Bracket.

(1) The following procedure applies to vehicles equipped with single throttle controls and to vehicles with dual throttle controls that have been converted to single throttle operation. On dual control linkage the same adjustments must be made on all dual parts in the linkage system.

(2) Pull throttle lever up into "NO FUEL" position and lock. Remove throttle lever housing from bracket on front slope (fig. 17). Adjust throttle lever cable clevis so that threaded end of cable extends 3 full threads inside the clevis. Tighten lock nut. Adjust position of throttle lever cable conduit in cable mounting bracket to provide at least ¼-inch clearance on single throttle control, and ⅛-inch clearance on converted dual control, between end of cable conduit sleeve and cable clevis lock nut.

(3) Release throttle lock and operate throttle to make sure that low oil pressure indicator light switch operating arm roller is alined with end of throttle lever. See that electrical connections at switch are tight. Adjust position of arm, if necessary, so that the red low oil pressure indicator lights will light when throttle is moved into "IDLING" position. Battery master switch must be on. Return throttle to "NO FUEL" position and lock. Install throttle lever housing on front slope bracket.

d. Connect Throttle Lever Cable to Junction Lever. At junction lever end of cable adjust position of throttle lever cable clevis so threaded end of cable projects 3 full threads inside the clevis. Tighten lock nut. Connect clevis to throttle junction lever in lower slot (fig. 55). On converted dual type, adjust position of throttle lever cable conduit in mounting bracket on hull floor. Cable clevis pin in junction lever must contact rear end of slot in lever when slot is set ¼-inch in from rear edge of junction lever bracket. On single throttle type adjust lock nuts which hold cable conduit in mounting bracket so cable clevis pin contacts rear end of slot in junction lever when slot projects ⅛ inch beyond rear edge of junction bracket.

e. Position Governor Control Lever. Open engine compartment doors, raise and lock engine splash panel. Disconnect governor control lever adjustable link from left engine governor control lever. Set right engine governor control lever in idling notch in governor control cam. Check position of governor control lever. The centerline of lever must be parallel with front edge of the governor housing. If necessary to correctly position governor control lever on shaft, remove governor control lever link, disconnect retracting spring, and loosen lever clamp bolt (fig. 47). Then position lever correctly, tighten bolt, and attach spring. Move governor control lever into "NO FUEL" position and attach governor control lever link. On left engine move governor control lever into "NO FUEL" position. Check position of lever and adjust if necessary by following previous procedure for lever on right engine. Adjust link so hole in end of link lines up with hole in governor control lever and tighten lock nuts only handtight and install clevis pin and new cotter pin and spread. Lock nuts will be tightened after engine speeds have been synchronized (par. 73).

f. Adjust Throttle Idler Shaft Arm Positions.

(1) In the driver's compartment, disconnect the throttle idler lever rod from arm on throttle idler shaft (fig. 47). Test throttle idler shaft to make sure it does not bind on clutch idler shaft. Free up shaft if necessary and lubricate. Adjust length of single throttle idler shaft connecting rod to 7$\frac{9}{16}$ inches—center to center of clevis pin holes.

(2) On converted dual type control, test both inner and outer throttle idler shafts. Free up shafts if necessary, and lubricate thoroughly. Adjust length of throttle idler shaft connecting rods to measure exactly 6$\frac{3}{4}$ inches from center to center of clevis pin holes.

(3) Connect throttle idler shaft connecting rod to lower hole in throttle junction lever (fig. 47). Be sure rear end of rod is connected to the top hole in the throttle idler shaft arm.

(4) Gently push the throttle idler connecting rod toward front of vehicle to take up any slack in the throttle linkage. Then move throttle idler lever rod (long rod) back to take up any slack in the governor control linkage. Adjust throttle idler lever rod clevis so pin will slip freely into bottom hole in outer throttle idler shaft arm (fig. 55). Tighten all lock nuts, insert all new cotter pins and spread.

g. Adjust Accelerator Pedal and Linkage. Adjust accelerator pedal stop screw so there is $\frac{1}{2}$ inch clearance between bottom of accelerator pedal stop screw pad and driver's sub-floor plate. Tighten stop screw lock nut. Adjust accelerator connecting rod so clevis pin has at least $\frac{1}{16}$-inch and not more than $\frac{1}{8}$-inch clearance at front end of upper slot in throttle junction lever (fig. 47). Tighten clevis lock nut. On converted dual type throttle controls this adjustment must be made on both accelerator connecting rods. Remove junction lever bracket, and install new cotter pins in all clevis pins. Install throttle junction lever bracket on hull floor and tighten securely. Engine speeds must now be synchronized according to procedure in paragraph 73.

h. After Adjustment Procedure. All points of friction in the throttle and accelerator linkage should be lubricated with engine oil. To complete assembly and installation, reverse the procedure given in subparagraph b above.

73. SYNCHRONIZING ENGINE SPEEDS.

a. Importance of Synchronized Engine Speeds. Both engines must operate at the same speed and respond equally to throttle movement when the clutches are disengaged in order to develop full power under load as a unit with the clutches engaged. If the speeds of the engines when clutches are disengaged differ more than 100 revolutions per minute from 1,500 to 1,800 revolutions per minute, engine speeds must be synchronized according to the following procedure.

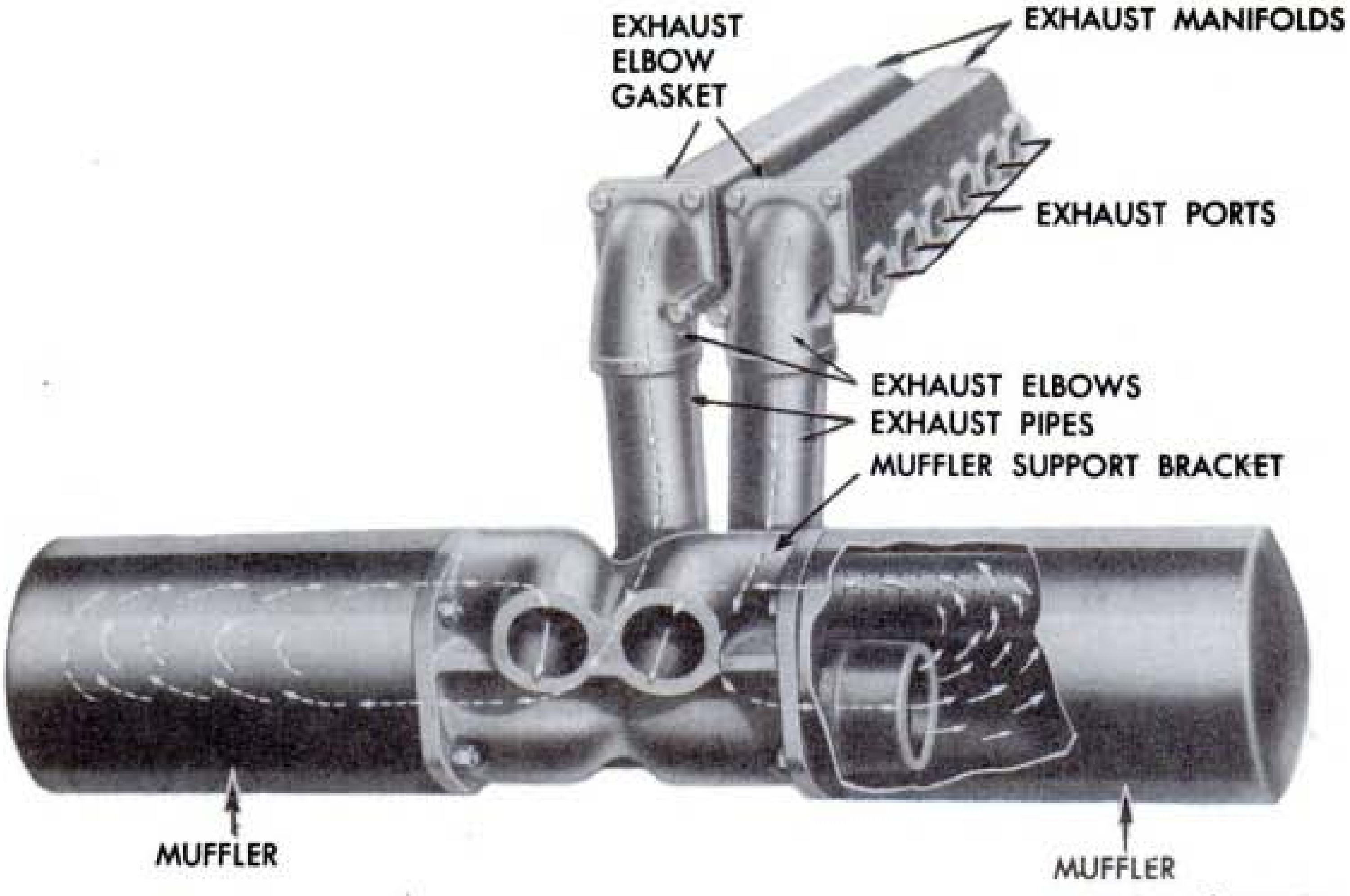

Figure 48—Exhaust System

b. Test Accuracy of Tachometers. With the engines operating and warmed up to 100°F and the clutches engaged, the tachometer readings must not differ more than 100 revolutions per minute from 1,500 to 1,800 revolutions per minute (fig. 10). If a greater difference exists one of the tachometers is out of calibration and should be replaced or the variation noted and readings taken during tests or adjustments compensated accordingly.

c. Adjustment of Governor Control Lever Link. Open engine compartment door (par. 167 a), and raise and lock engine compartment splash panel (par. 168 **b**). With engines warmed up to 100°F and clutches locked out, set and lock the hand throttles to operate engines at 1,500 revolutions per minute. Loosen lock nuts at both ends of adjustable governor control link on the left engine (fig. 47). Slowly turn the turnbuckle to increase or decrease speed of left engine as required to balance it within 100 revolutions per minute of the speed of the right engine. Tighten the lock nuts and recheck tachometer readings. Lower splash panel, and hook into place (par. 168 **c**). Close and bolt engine compartment doors (par. 167 **b**).

74. EXHAUST SYSTEM.

a. Description. Each engine has its individual exhaust system consisting of an exhaust manifold bolted to the cylinder head, an exhaust pipe connecting the manifold elbow to the muffler support bracket and a muffler for each engine.

75. REPLACEMENT OF EXHAUST MANIFOLD GASKETS.

a. General. The exhaust manifold gaskets can be replaced without completely removing the exhaust manifold as explained in the following procedure.

b. Removal of Exhaust Manifold Gaskets. Open engine compartment doors (par. 167 **a**). Raise and lock engine compartment splash panel (par. 168 **b**). Remove engine compartment floor plates (par. 170 **b**). Drain cooling systems of both engines (par. 103 **b**). Disconnect water bypass tube on each engine by unscrewing the union nuts on water bypass tube upper elbow. Remove attaching bolts from both upper elbows, and remove elbows and gaskets. Remove bolts on each engine attaching lower elbow to oil cooler housing, and remove gaskets. Loosen clips attaching each bypass tube to fan end of cylinder block. Push upper ends of both tubes down between the engines until they rest on the air heater covers. Unscrew four bolts which attach exhaust elbow to manifold on which the gaskets are to be replaced. From below, loosen nut on first stud at fan end of manifold with ratchet handle, 10-inch extension and ⅝-inch socket and back off nut flush with end of stud. From above, use ratchet handle with ⅝-inch socket to loosen six remaining manifold stud nuts and back off nuts until flush with ends of studs. Separate manifold from cylinder head. Use screwdriver to remove the exhaust manifold gaskets.

c. Installation of Exhaust Manifold Gaskets. Thoroughly clean all faces on exhaust manifold and cylinder head exhaust parts. Slot the stud holes in the new exhaust manifold gaskets at the bottom of the stud holes so gaskets can be dropped down over the studs (fig. 49). Carefully position all three gaskets on the studs. Push manifold into place against cylinder head, and tighten stud nuts evenly to compress gaskets uniformly. Reverse procedure in paragraph 75 **b** to reassemble remaining parts. Install new exhaust manifold elbow gasket, and tighten elbow bolts evenly. Fill engine cooling systems (par. 103 **d**). Install engine compartment floor plates (par. 170 **c**).

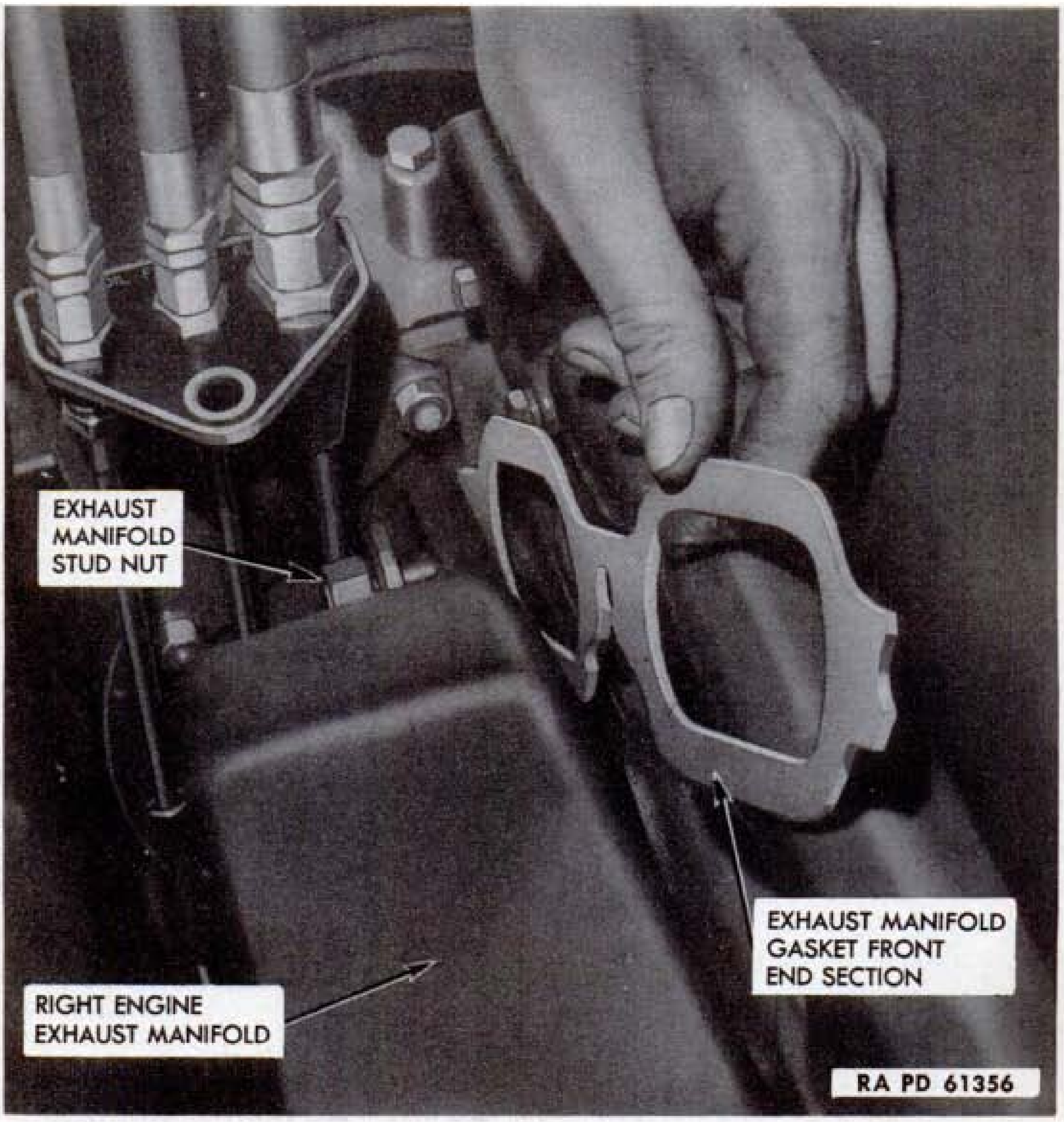

Figure 49—Sliding Exhaust Manifold Gasket Down on Studs

76. EXHAUST MANIFOLDS.

a. Description. The exhaust manifolds are made with slotted bolt holes to facilitate their removal.

b. Removal of Exhaust Manifold. Perform operations outlined in paragraph 75 **b**. Lift exhaust manifold off (fig. 50). Remove washers and nuts from all studs except No. 3 and No. 5 (counting from either end). Remove gaskets.

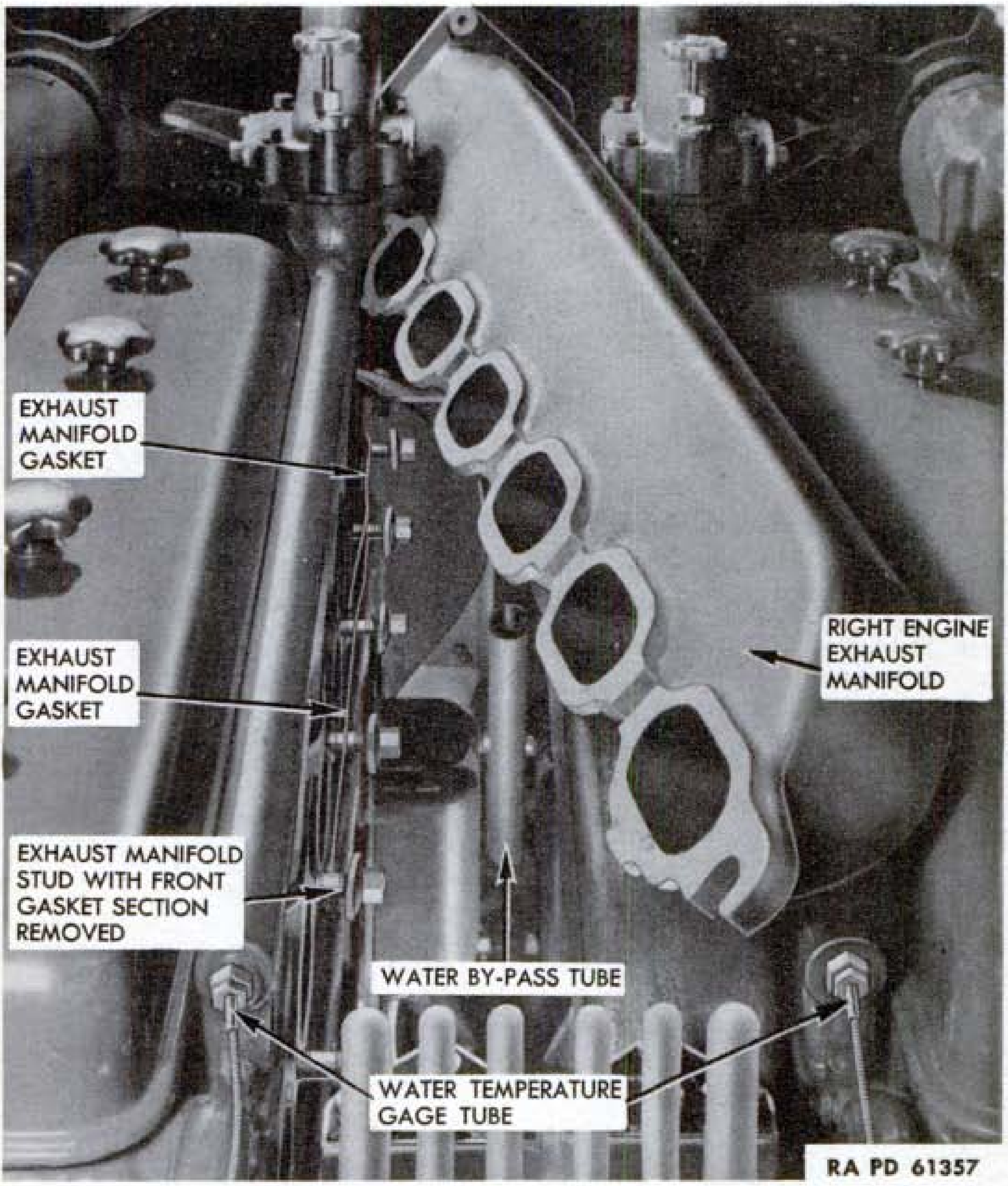

Figure 50—Exhaust Manifold Removed

c. Installation of Exhaust Manifold. Thoroughly clean gasket surfaces on cylinder head parts and the exhaust manifold. Install new manifold gaskets on studs. Do not slot bolt holes in the gaskets. Install manifold washers and nuts which were removed, and screw nuts on until flush with ends of studs. Position all washers against nuts. Carefully position manifold over studs making sure gaskets are not damaged. Tighten nuts evenly to compress gaskets uniformly. Carefully slide new gasket into position between elbow and end of exhaust manifold. Install four bolts with lock washers, and tighten bolts evenly. Complete the installation by reversing procedure in paragraph 75 **b** to reassemble remaining parts. Make sure all nuts, bolts, and unions are tight. Fill engine cooling systems (par. 103 **d**). Install engine compartment floor plates.

77. EXHAUST PIPES.

a. Description. The two vertical exhaust pipes carry the exhaust gases from the manifolds, through openings in the muffler support bracket, to the mufflers (fig. 48). The upper ends of the pipes fit into the exhaust elbows. The lower ends fit into openings in the muffler support bracket. Because of the close fit of the pipes, no packing is required in either the exhaust elbows or muffler support bracket.

b. Removal of Exhaust Pipe. Remove radiator (par. 104 **b**). Remove fan shroud (par. 104 **b**). Remove the one long and three short bolts which attach elbow to end of exhaust manifold. Remove elbow gasket. Work elbow up and off end of exhaust pipe. Next remove exhaust pipe by working it toward engine and out of muffler support bracket.

c. Installation of Exhaust Pipe. Clean gasket surfaces on elbow and end of exhaust manifold. Install lower end of exhaust pipe in muffler support bracket. Work elbow down into position over end of exhaust pipe. Spring elbow slightly away from manifold and carefully insert new gasket. Install the four attaching bolts with lock washers and tighten bolts to compress gasket uniformly. Install fan shroud (par. 107 **c**). Install radiator (par. 104 **c**). Make sure all connections are tight, and engine cooling system is filled.

78. MUFFLERS.

a. Description. Two mufflers, one for each engine, are used to silence the exhaust noise. The two mufflers are bolted to a dual muffler support bracket (fig. 48).

b. Removal of Muffler or Muffler Support. Remove radiators (par. 104 **b**). Remove the muffler guard and deflector plate as a unit by first removing the two long brackets which attach the deflector plate to the hull. Next remove the four short brackets supporting the muffler guard and remove the bolts holding the muffler guard to the hull. Lift off the muffler guard and deflector plate. Either muffler can be disassembled from the muffler support by removing the four nuts and lock washers which attach muffler. If the muffler support is to be removed, it is not necessary to remove the exhaust pipes. Remove the six bolts and safety nuts which attach muffler support to lower rear hull plate and work muffler support off exhaust pipes.

c. Installation of Muffler or Muffler Support. The mufflers or muffler support are installed by reversing the removal procedure. When installing muffler support, make sure exhaust pipes enter support evenly and are firmly seated.

79. REMOVAL OF POWER UNIT.

a. General Instructions. Facilities for removing and installing a power unit should include: Adequate heavy-duty hoisting equipment—an A-frame equipped with two suitable differential chain falls or a wrecking truck capable of lifting the power unit so as to completely clear the vehicle, two heavy cable or chain slings, clean containers to hold drained cooling liquid and engine oil, twin motor assembly stand (41-S-4987-77), and clean receptacles for small subassemblies and attaching parts. The parts which are removed should be kept segregated and placed in related positions to make it easier to locate these parts readily for installation. Correct assembly is often made easier if bolts with washers or lock washers are temporarily screwed into their positions during disassembly or temporarily attached to parts removed with the necessary washers, lock washers and nuts. Tagging of wires, hoses, tubes and interchangeable parts frequently aids in correct positioning of parts during assembly and saves time. CAUTION: *All openings and ends of fuel and oil lines must be taped to prevent entrance of dirt. All parts removed should be protected against dust, sand and weather.*

b. Suggested Distribution of Procedure. Sequence of the following removal procedure is: Disassembly in fighting compartment. Disassembly in engine compartment from above. Disassembly in engine compartment from below. This makes it possible to divide personnel into groups so that disassembly operations can be carried on at the same time at all three locations.

c. Removal Procedure in Fighting Compartment.

(1) Turn tank selector valve to "OFF".

(2) DISCONNECT CABLES AND WIRES IN FIGHTING COMPARTMENT. Remove battery box cover (par. 186 **b**). Test battery voltage (par. 5 **a** (15)) and if batteries are not fully charged, remove batteries and recharge. If batteries are fully charged disconnect ground cable from rear battery. Slide baffle plate up out of battery box. Remove both starter cables from bus bar and put washers and nuts back on terminals. Disconnect conduits from battery box fittings and pull starter cables out of battery box to be later placed on engine in out-of-way position. Raise left generator compartment door and remove hose clamp from conduits.

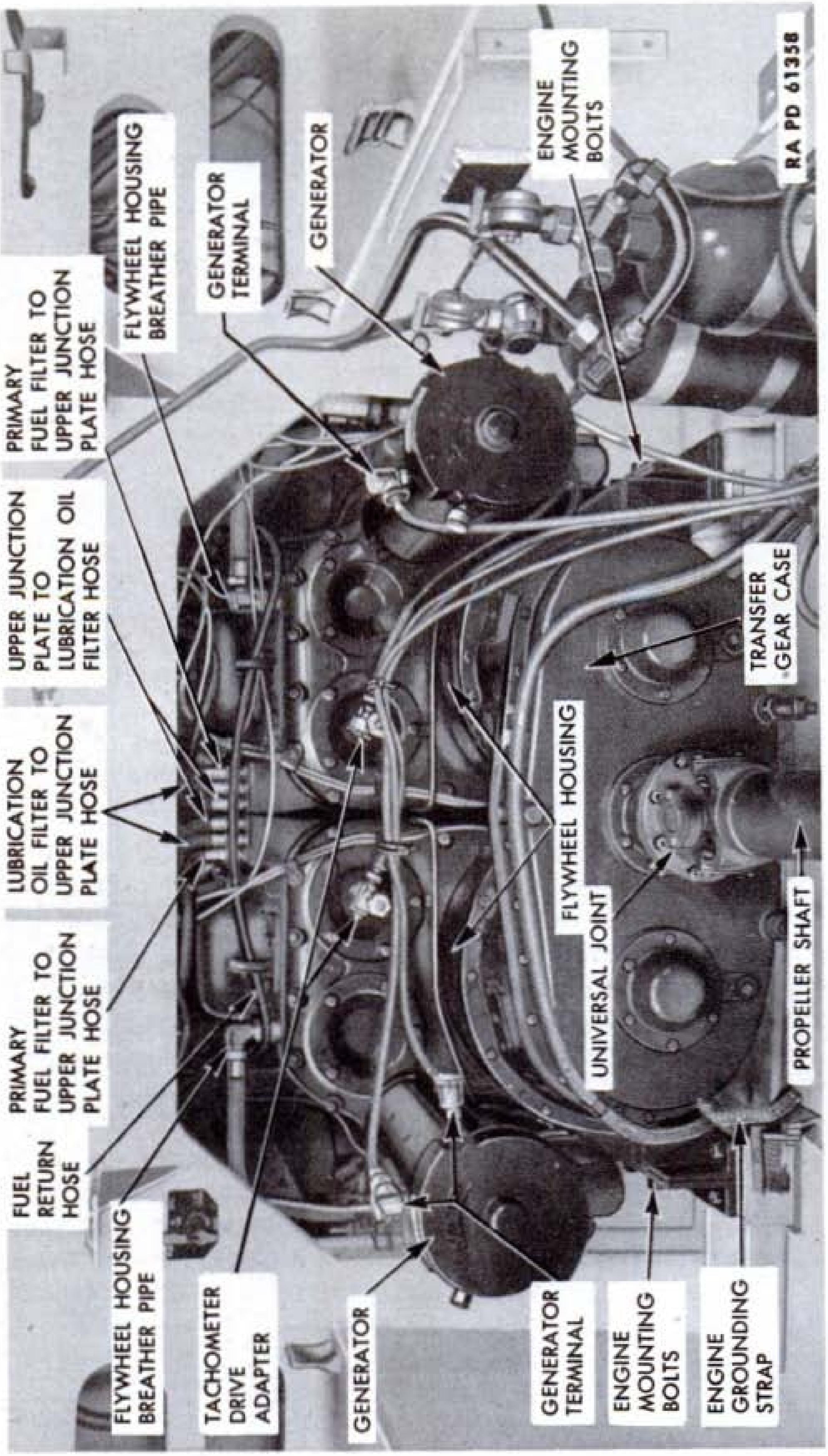

Figure 51—Flywheel End of Power Unit with Bulkhead Opening Covers Removed

(3) Remove Left and Right Step and Door Assemblies. Remove circuit breaker box for 3-inch gun from left step (par. 220 **b**) and lay it back against forward fixed fire extinguisher cylinder. Remove radio filter box, alongside transfer gear case filler opening, from its bracket and lay box on vehicle floor (fig. 88). Take out bolts which attach left step, and remove step and door assembly as one unit. Take out bolts and remove right step and door assembly.

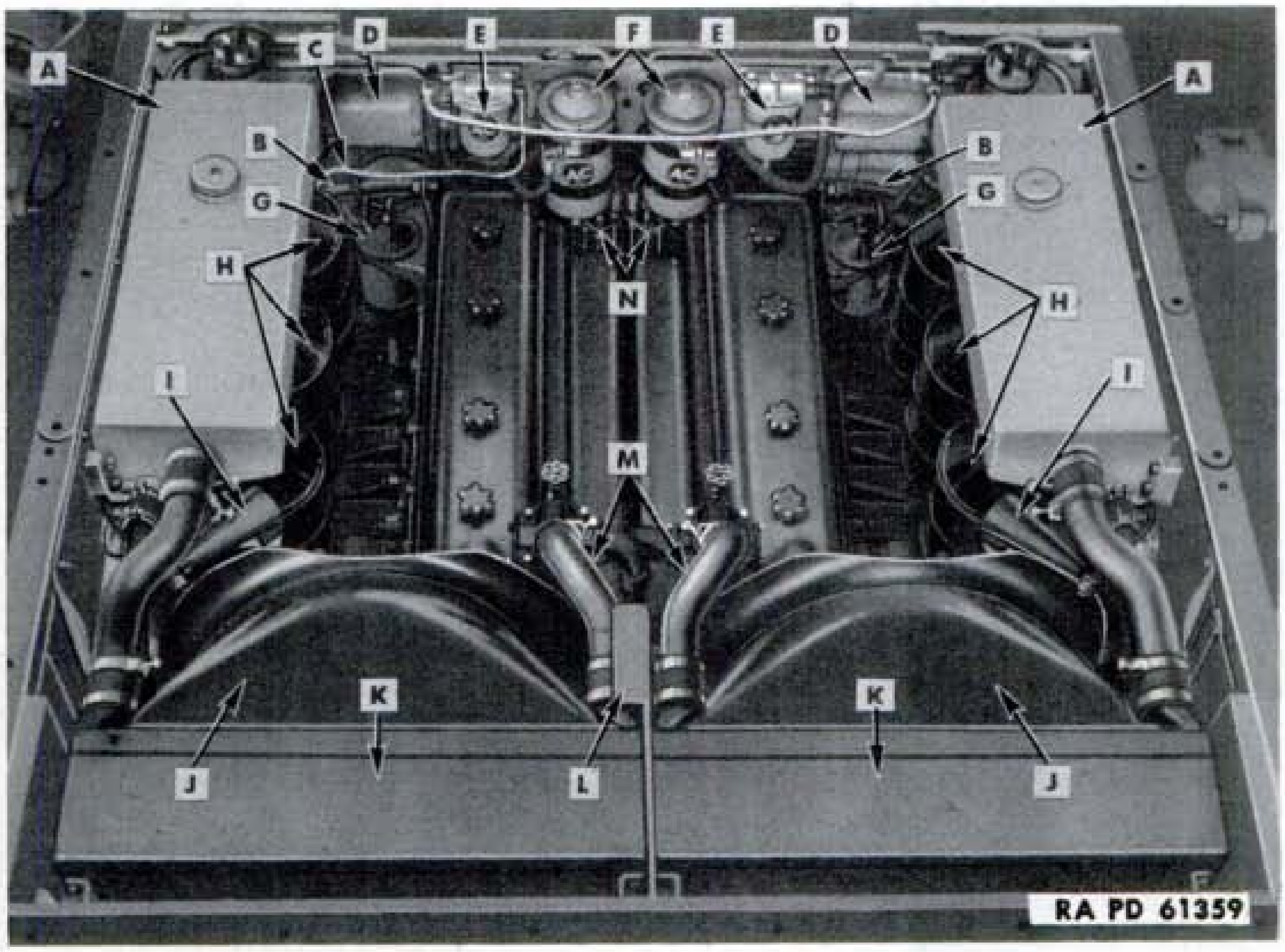

A—AUXILIARY WATER TANK
B—FLYWHEEL HOUSING BREATHER HOSE
C—AIR HEATER PUMP INTAKE TUBE
D—AIR HEATER COIL BOX
E—PRIMARY FUEL FILTER
F—LUBRICATING OIL FILTER
G—SECONDARY FUEL FILTER
H—AIR CLEANERS
I—FIRE EXTINGUISHER NOZZLE
J—FAN SHROUD
K—RADIATOR
L—SUPPORT PLATE
M—RADIATOR INLET TUBES
N—UPPER JUNCTION PLATES

RA PD 61359B

Figure 52—Engine Compartment with Cover Plates Removed

(4) Remove Upper Bulkhead Opening Cover. Disconnect the transmission oil cooler hoses from oil tubes. Remove bolts which attach the upper bulkhead opening cover and remove the cover with transmission oil cooler and guard attached.

(5) Detach Parts at Flywheel End of Engine. Working through the bulkhead opening, disconnect two conduits and wires from each generator (fig. 51). Remove bolt which attaches engine

ground strap to right engine mounting bracket. Unscrew hexagon coupling nut, and disconnect tachometer adapter on the tachometer casing from tachometer drive on each engine. See that short drive pin is placed in the tachometer adapter which is attached to the casing. Cover end of casing with tape to prevent losing the drive key. Disconnect the lubricating oil tank vent hose at each engine flywheel housing and place end of hose between filler pipe and hull side plate. Disconnect one fuel and two lubricating oil hose connections at the upper junction plate on each engine (fig. 51). Disconnect fuel return hose at each end of tee on tube to fuel selector valve. Pull hose out of engine lifting eyes and place on top of engine. Disconnect clutch control linkage (par. 112 **b**). Remove six nuts and bolts which attach rear universal joint flange yoke to engine driven shaft flange to disconnect propeller shaft. Remove four horizontally positioned bolts which attach engine to front mounting brackets at each side of engine (fig. 51).

d. Removal Procedure in Engine Compartment from Above.

(1) REMOVE ENGINE COMPARTMENT COVER PLATES. Remove engine compartment doors and cover plates (par. 167 **e**). Remove engine compartment splash panel (par. 168 **d**).

(2) REMOVE AUXILIARY WATER TANKS, RADIATORS AND EXHAUST PIPES. Remove air cleaners (par. 88 **b**). Remove auxiliary water tanks (par. 105 **b**). Remove radiators (par. 104 **b**). Remove fan shrouds (par. 104 **b**). Remove bolts which attach radiator support bracket to upper rear hull plate (fig. 52). Remove exhaust pipes (par. 77 **b**).

(3) REMOVE FILTER PANEL (par. 94 **b**). Place free ends of air heater high tension wires alongside manifolds.

(4) DISCONNECT WIRES, TUBES AND LINES IN ENGINE COMPARTMENT. In terminal boxes in engine compartment disconnect wires leading from lubricating oil tank gages, emergency stop solenoids and both starter solenoid switches. On each side of engine compartment, disconnect the horizontal fire extinguisher tube from tee on upper rear nozzle (fig. 52). Remove the bolts, with lock washers, which attach lower rear and upper rear nozzle to hull and sponson cover plate. Lift out nozzles, brackets and vertical tube as an assembly.

e. Removal Procedure in Engine Compartment from Below.

(1) REMOVE ENGINE COMPARTMENT FLOOR PLATES (par. 170 **b**).

(2) DISCONNECT TUBES AND LINES. Drain both engine lubricating oil systems (par. 55). Disconnect air heater fuel supply hose and oil pressure gage hose at lower junction plates on each engine. Remove cotter pin and clevis pin from throttle control rod, and remove rod from idler lever at bottom of clutch housing. Disconnect the

inlet and outlet hoses from each engine oil pan, and lay hoses on floor of engine compartment, alongside oil tanks.

(3) REMOVE ENGINE REAR SUPPORT BRACKET BOLTS. Remove four bolts which attach the two engine support brackets to engine support welded to hull floor.

f. Removing Power Unit from Vehicle.

(1) INSPECT POWER UNIT TO MAKE SURE IT IS READY FOR REMOVAL. Make inspection in fighting compartment and from above and below in engine compartment to see that all parts which would interfere with removal are disconnected.

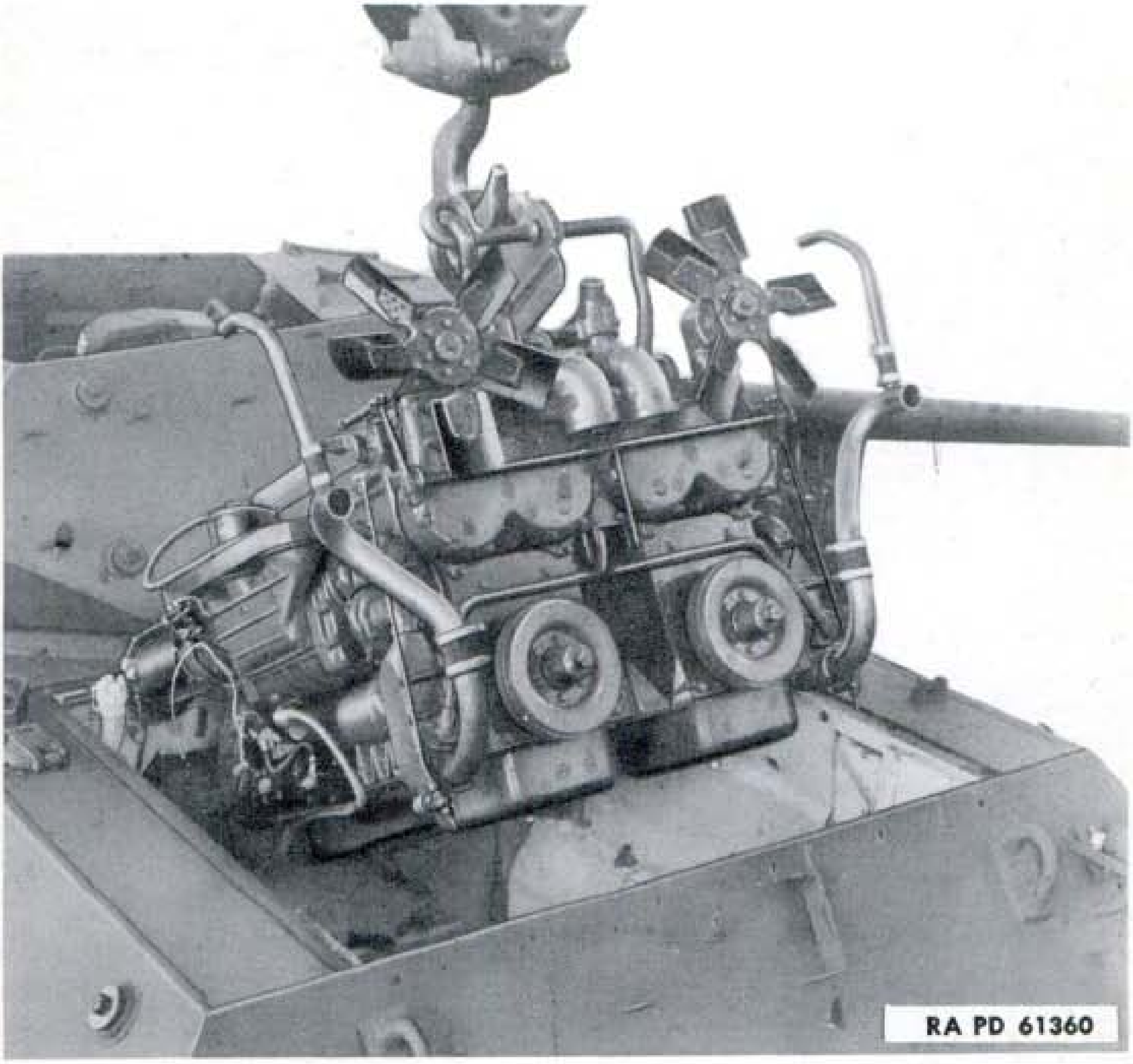

Figure 53—Removing Power Unit from Vehicle—(Engine Lifting Hooks, 41-H-2584)

(2) ATTACH LIFTING HOOKS AND TACKLE. Attach engine lifting hooks (41-H-2584) to front and rear engine lifter brackets on each engine. Attach lifting tackle to lifting hooks.

(3) LIFT POWER UNIT FROM ENGINE COMPARTMENT. Station personnel in fighting compartment and on top of vehicle to guide

power unit as it is being hoisted out. See that fan end of power unit clears the upper rear hull plate. Hoist fan end of power unit to approximately 30-degree angle (fig. 53). Gradually move power unit rearward with crowbar as it is being lifted so generators and transfer gear case will clear the bulkhead. When transfer gear case is clear of bulkhead, place free ends of starting cables in space between engines so they will be out of the way. After power unit is hoisted clear of vehicle, move vehicle forward and out of the way, or if hoist is mobile type move it rearward from vehicle. Remove engine support brackets and mounting pads from the two engine supports welded to the hull floor at front engine compartment, and install brackets on each engine flywheel housing. Lower power unit into a twin motor assembly stand (41-S-4987-77), if available or on suitable blocking to prevent damage to engine oil pans. Secure power unit to stand with bolts. Remove hoisting tackle and lifting hooks.

g. **After Removal Inspections and Operations.** If power unit is not to be reinstalled but replaced with another unit, make careful inspection to see that all parts not supplied with replacing unit are taken off the removed power unit. Inspect all such parts to determine whether they are still serviceable or must be replaced. Regardless of whether the power unit is to be reinstalled or replaced, inspect all hoses, tubes, conduits and wires which were disconnected and remain in the vehicle to determine whether they are defective and must be replaced. Thoroughly clean interior of engine compartment and hull. With the power unit removed it is easy to inspect hull, engine compartment and many units which are difficult to inspect with power unit in place. Carefully inspect the hull and all fuel and oil tanks, tubing, conduits, hull drain valves and control, clutch controls, rear universal joint, and other parts to determine necessary repairs or replacements to be made before power unit is installed. Paint the interior of engine compartment.

80. INSTALLATION OF POWER UNIT.

a. **Preparation of Power Unit for Installation.** Power unit must be clean and in good operating condition. Make sure that starters and clutch release shaft bearings are lubricated (par. 27 c). Clean engine oil strainer (par. 58 c). Examine power unit and all component units such as fans, oil pans, emergency stop solenoids, air inlet housings, crankshaft dampers, rocker arm covers, transfer gear case drain elbow and generators to make sure no parts are damaged. See that all parts which were taken off the removed power unit after it was removed from the vehicle have been installed on the power unit which is to be placed in the vehicle. When another power unit is to be installed, make sure that all parts which must be taken off a power unit before it is removed from a vehicle (par. 79) are taken off the power unit to be installed. Remove engine support brackets from each engine flywheel housing. Assemble engine support brackets to the two engine supports welded to hull floor at front of engine compartment. Place one engine mounting pad with projections down, on engine support on hull floor. Position support bracket on top of pad and insert four bolts. Place a second pad with projections up, over the four bolts into place against lower side of engine support. Install safety nuts and tighten. Place free ends of starter cables in space between the engines so they will be out of the way. Place the free ends of the air heater high tension wires alongside the manifolds. Position engine mounting pad with projections down on center engine support welded to hull floor at rear of engine compartment.

b. Preparation of Vehicle for Installation of Power Unit. See that engine compartment is in readiness for installation of power unit. Lubricating or tank vent hoses must be out of the way and positioned between filler pipe and hull side plates. Inlet and outlet hoses attached to lubricating oil tanks must be on hull floor, and stretched to the rear. Oil pressure gage hose and air heater fuel supply hoses for each engine must be in position where they will not be damaged.

c. Placing Power Unit in Engine Compartment.

(1) ATTACH LIFTING HOOKS AND TACKLE. Attach engine lifting hooks (41-H-2584) to front and rear engine lifter brackets on each engine. Attach lifting tackle to lifting hooks.

(2) LOWER POWER UNIT INTO ENGINE COMPARTMENT. Raise power unit high enough to clear upper rear hull plate on vehicle. Move vehicle under power unit, or if mobile hoist is used, move power unit until it is over engine compartment. Station personnel on top of vehicle and in fighting compartment to guide the power unit while it is being lowered into place. Power unit must be tilted at an angle of approximately 30 degrees with fan ends of engines up. Move power unit forward in vehicle as it is being lowered with fan ends of engines still tilted upward and center the power unit, using crowbars on each side so engine support pads on flywheel housings will fit inside the two engine support brackets bolted to the engine supports which are welded to the hull floor. Also center the engine support brackets on fan ends of engines over the single engine support at rear of engine compartment. Lower the power unit onto brackets and shift as necessary to line up bolt holes in brackets and flywheel housings. Install four bolts with lock washers in each bracket but do not tighten. Remove lifting hook on flywheel ends of engines. Using one lifting hook on fan ends of engines, hoist power unit only enough so that engine support plate can be slipped into place between engine center support brackets and engine mounting pad which was previously positioned on center engine support welded to hull floor. Slip the engine support plate into position with upturned ends in

top. Shift fan end of power unit as required to line up bolt holes and insert four bolts in center engine support brackets from above. Install the lower engine mounting pad with projections up, and start the safety nuts on the bolts. Lower hoist, and remove lifting hook. Tighten safety nuts on all engine support bracket bolts.

d. Installation Procedure. To complete the installation reverse the removal procedure in paragraph 79 **e**, **c** and **d**. If batteries were removed for recharging they must be tested and then installed. At this stage of the installation procedure the generator wires will have been connected. Therefore, immediately after batteries are connected, both generators must be polarized (par. 188 **c**). This is necessary to avoid damage to generators by starting engines without generators being correctly polarized. Omit installation of engine compartment cover plates and floor plates and rear universal joint cover.

e. After Installation Procedure. Adjust clutch pedal free travel and equalizer (pars. 114, 115, and 116). Install rear universal joint cover. Fill engine lubricating oil systems (par. 56). Fill engine cooling systems (par. 103 **d**). Close battery master switch. Turn fuel tank selector valve to LH or RH. Fill primary and secondary fuel filters and start one engine and bleed fuel system (par. 100 **c**). CAUTION: *Immediately after engines are started, see that oil pressure gages, ammeter and voltmeter show correct readings.* With both engines running, examine from above and below, all fuel, lubricating oil and water connections and all gaskets for leaks. Check engine speeds and synchronize if necessary (par. 73). Test for equalization of clutch engagement (par. 117). Install engine compartment cover plates (par. 167 **f**) and floor plates (par. 170 **c**). Road test the vehicle and make during-operation inspection (par. 27).

Section XIV

CYLINDER HEADS AND VALVE MECHANISM

81. CYLINDER HEADS AND VALVE MECHANISM.

a. Cylinder Head Assemblies. Each cylinder head assembly (fig. 73), which is removed and installed as a unit, consists of the cylinder head, exhaust valves and injectors with operating mechanism, exhaust manifold, water manifold and fuel supply and return manifolds.

b. Valve and Injector Operating Mechanism. A single camshaft in each engine operates the valves and injectors by means of cam followers, push rods, and rocker arms. The three rocker arms for each cylinder are mounted as an assembly on a short rocker arm shaft supported by two brackets bolted to the cylinder head (fig. 43). The rocker arm that operates the injector is mounted between the two rocker arms which operate the exhaust valves.

82. ROCKER ARM COVERS.

a. Description. A pressed steel rocker arm cover bolted to each cylinder head covers the mechanism which operates the valves and injectors.

b. Removal of Rocker Arm Cover. Open engine compartment doors (par. 167 **a**). Raise and lock engine compartment splash panel (par. 168 **b**). On rocker arm cover, unscrew four rocker arm cover bolts by turning knobs by hand until free. The knobs are attached to cover by retainers and are used to lift cover off.

c. Installation of Rocker Arm Cover. Examine the cork rocker arm cover gasket. If it is not serviceable remove gasket from cover, clean the surface and cement new gasket in place. Thoroughly clean the surface on cylinder head against which the gasket will bear. Lower rocker arm cover into position, turn the knobs to screw down the cover bolts and tighten by hand. Lower engine compartment splash panel and hook in place (par. 168 **c**). Close and bolt engine compartment doors (par. 167 **b**).

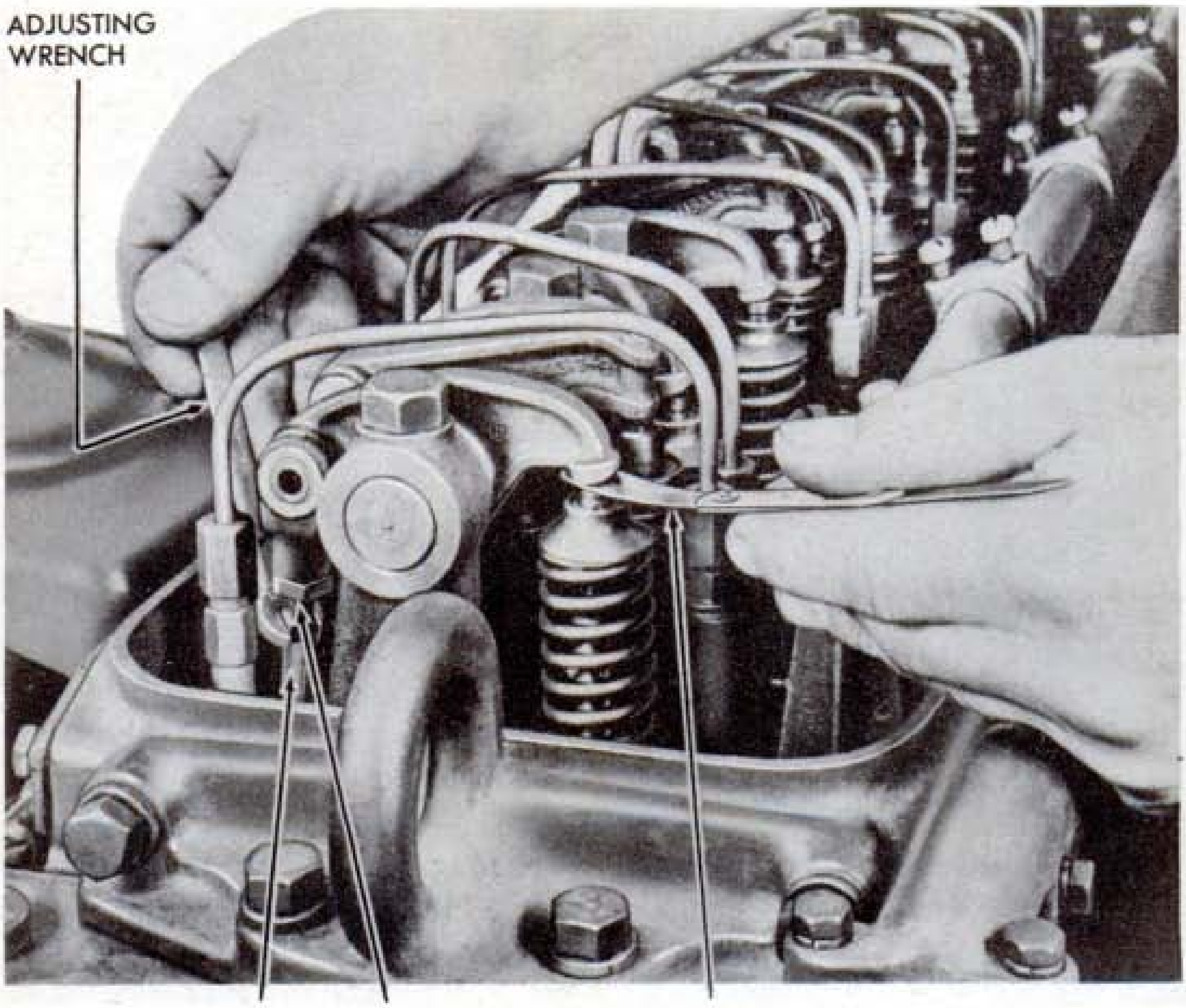

Figure 54—Adjusting Exhaust Valve

83. ADJUSTMENT OF VALVES.

a. General. Valves always must be adjusted or lashed when engine is hot except when parts of the valve operating mechanism have been replaced. In this case valve clearance always must be adjusted to 0.015 inch temporarily before engine is started and must be readjusted after engine is warmed up.

b. Check Valve Clearances. Warm up engines to 140°F. Stop engines and lock out both clutches. Remove rocker arm cover (par. 82 **b**). Press auxiliary starter button on filter panel to crank the engine until the rocker arm starts to move the injector follower in No. 1 cylinder down. This is necessary to make certain that exhaust valves in No. 1 cylinder will be fully closed. On end valve in No. 1 cylinder, measure the clearance between end of valve stem and the rocker arm (fig. 54). If clearance is correct at 0.012 inch an 0.011-inch feeler gage will pass freely through the opening and a 0.013-inch feeler gage will not. If clearance is not correct it must be adjusted according to procedure in following subparagraph. Check clearance of other valve in No. 1 cylinder and adjust if necessary. When valve clearances are correct for both valves in No. 1 cylinder, crank the engine until injector follower in No. 2 cylinder has started down and check clearances of valves in No. 2 cylinder. Repeat the above operations until all valve clearances have been checked and, if necessary, have been adjusted correctly. Install rocker arm cover (par. 82 **c**).

c. Adjust Valve Clearances. Valve clearances must be checked by procedure in previous subparagraph before they are adjusted. If clearance is not correct it must be adjusted as follows: Use push rod lock nut wrench (41-W-1986-200) and loosen lock nut on push rod. Use a wrench which fits the hexagon on the push rod and turn it to adjust the clearance so that an 0.011-inch feeler will pass freely through the opening and a 0.013-inch feeler gage will not (fig. 54). Use wrench to hold push rod from turning, and tighten the lock nut. The valve clearance may change slightly when lock nut is tightened and must be again checked with feeler gages, and readjusted if necessary.

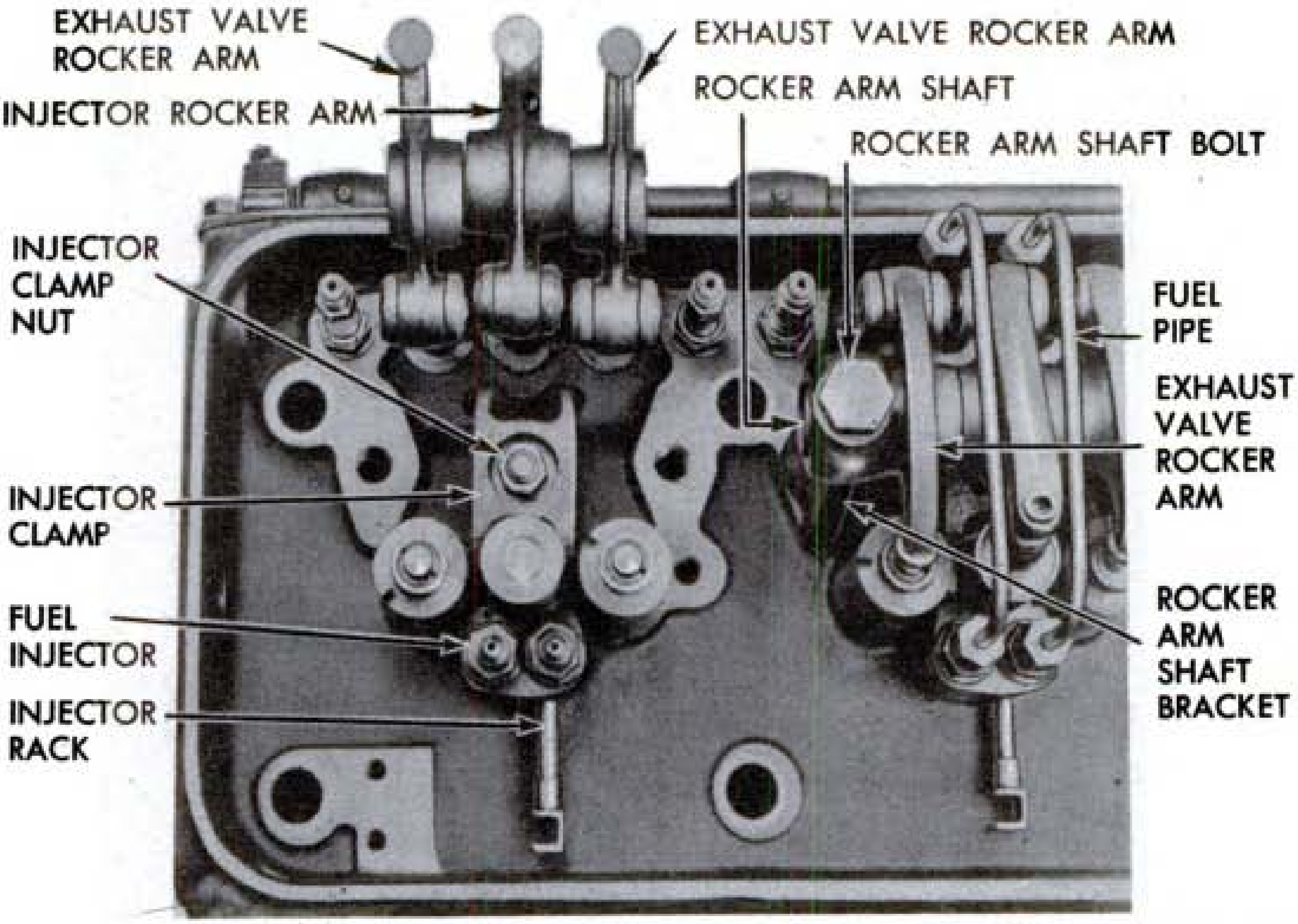

RA PD 61363

Figure 55—Rocker Arms Swung Back to Remove Injector

84. TESTING ENGINE COMPRESSION.

a. Test Engine Compression. First start and run engine to be tested until it reaches 150°F. Remove rocker arm cover (par. 82 **b**). Remove injector from No. 1 cylinder (par. 68 **d**). Remove fuel pipe from fuel outlet manifold connector (fig. 55). Connect the fuel pipe

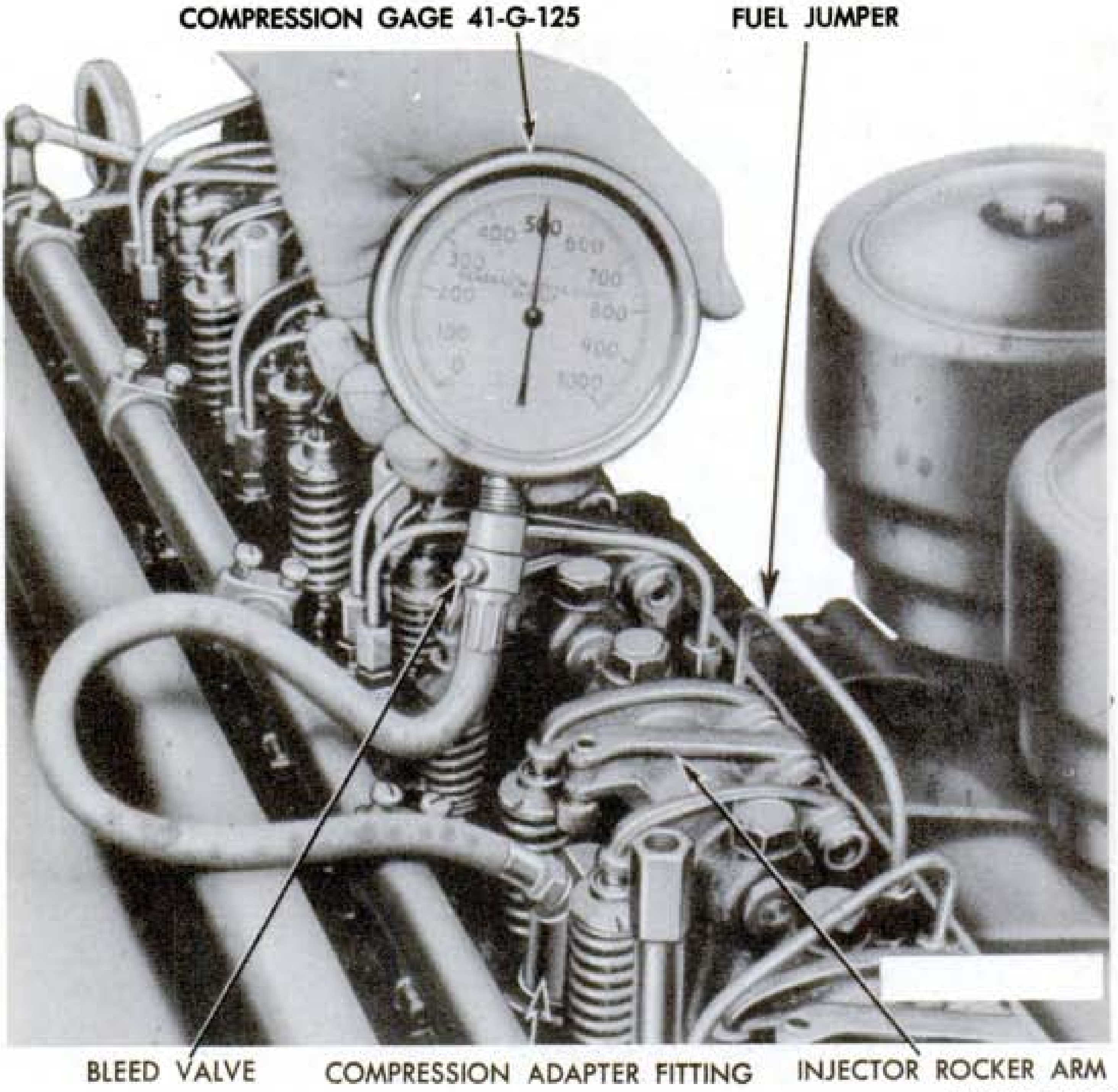

Figure 56—Testing Engine Compression

from the fuel inlet manifold connector to the fuel outlet manifold connector to serve as a fuel jumper (fig. 56). Install the compression adapter fitting on end of hose of compression pressure gage (41-G-125) in the injector opening in the cylinder head. Tighten injector clamp securely and make sure that bleeder valve on gage is closed. Place rocker arm shaft assembly in position and tighten bracket bolts. CAUTION: *Starter must be used only to start the engine and not to continuously crank engine while making compression test.* Turn tank selector valve to LH or RH. Lock out both clutches and start engine to be tested. Run engine at 400 to 450 revolutions per minute until maximum compression pressure of cylinder is indicated on gage. Stop engine. Record the reading on gage to compute the average compression reading. Open bleeder valve on gage to release the pressure (fig. 56). Loosen rocker arm shaft bracket bolts until free and swing rocker arms and shaft over toward outer side of engine. Remove nut from injector clamp bolt and remove pressure gage. Examine injector for burned tip and see that rack moves freely. Install injector or re-

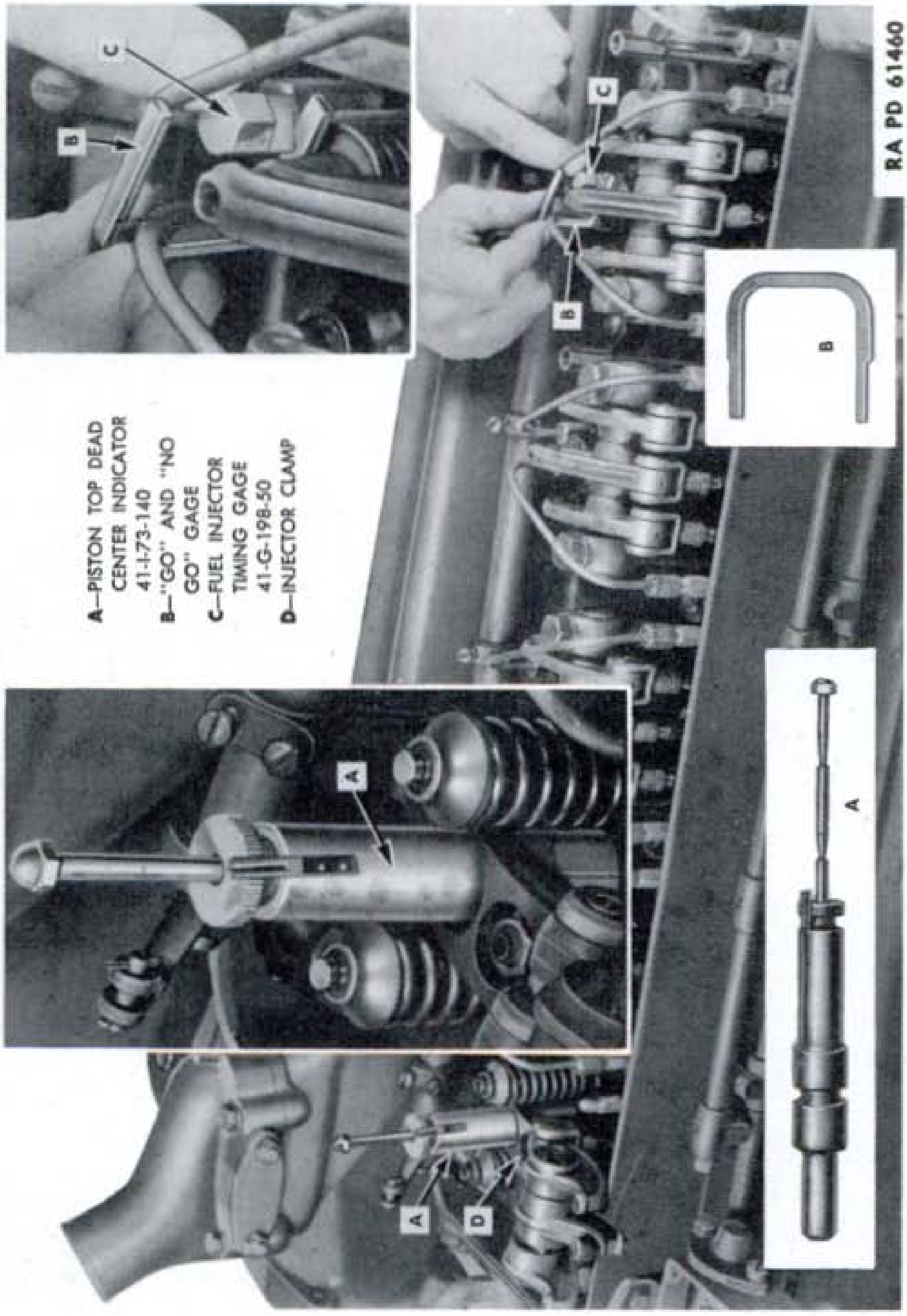

Figure 57—Checking Engine Timing, Using Piston Top Dead Center Indicator 41-I-73-140

place if required (par. 68 **c**). Connect both fuel pipes to injector making sure all connections are tight. Proceed to next cylinder in turn and repeat operations to test engine compression with engine running at exactly the same speed. Record cylinder numbers and gage readings. If compression pressure in any one cylinder is 25 pounds less than the average of the other five cylinders, the cause must be determined and corrected (see Trouble Shooting, Power Unit, paragraph 44 **b** (11), or report to higher authority).

85. ENGINE TIMING.

a. Engine timing is determined by the proper mating of the gear on the crankshaft and the gears in the timing gear train which drive the camshaft. If this relationship has been disturbed or incorrectly established in reassembly the engine may suffer a loss of power at full load. Engine timing can be checked without removing the timing gear cover by the following procedure.

b. To Check Engine Timing. Remove injector (par. 68 **d**) in No. 1 cylinder (fig. 33). Insert piston top dead center indicator (41-I-73-140) in the opening and clamp in place with injector clamp. Push the timing rod down into contact with head of piston. Lock out clutch on other engine. Use bar in rear universal joint to turn engine slowly in direction of rotation (par. 53 **e**) until the timing rod no longer moves upward. Then turn engine at least ¼ revolution beyond top dead center. Without moving the timing rod, adjust the compensating screw so it is flush with the shoulder on the rod. Again crank the engine until stop nut on upper end of rod can be pushed down into contact with compensating screw. Continue cranking to raise the rod until the upper shoulder is just flush with the compensating screw. Insert the fuel injector timing gage (41-G-198-50) in the hole in No. 5 injector. Try the "GO" and "NO GO" gage between the timing gage and injector follower. If only the "GO" end of the gage will pass the engine is correctly timed. If neither end will pass the engine is timed slow (late). If both ends of the gage will pass the engine is timed fast (early). Notify higher authority if engine is not correctly timed. Remove the indicator and install the injector (par. 68 **f**).

86. REPLACEMENT OF CYLINDER HEAD GASKETS.

a. Removal of Cylinder Head. Remove engine compartment cover plates as a unit (par. 167 **e**). Remove engine compartment splash panel (par. 168 **d**). Turn fuel tank selector valve to "OFF". Remove air cleaners on engine from which cylinder head is to be removed (par. 99 **b**). Drain cooling system for that engine (par. 103 **a**). Remove filter panel assembly (par. 94 **b**). Unscrew water bypass union nuts from elbows on thermostat housings on both engines. Remove two bolts attaching each bypass tube elbow to

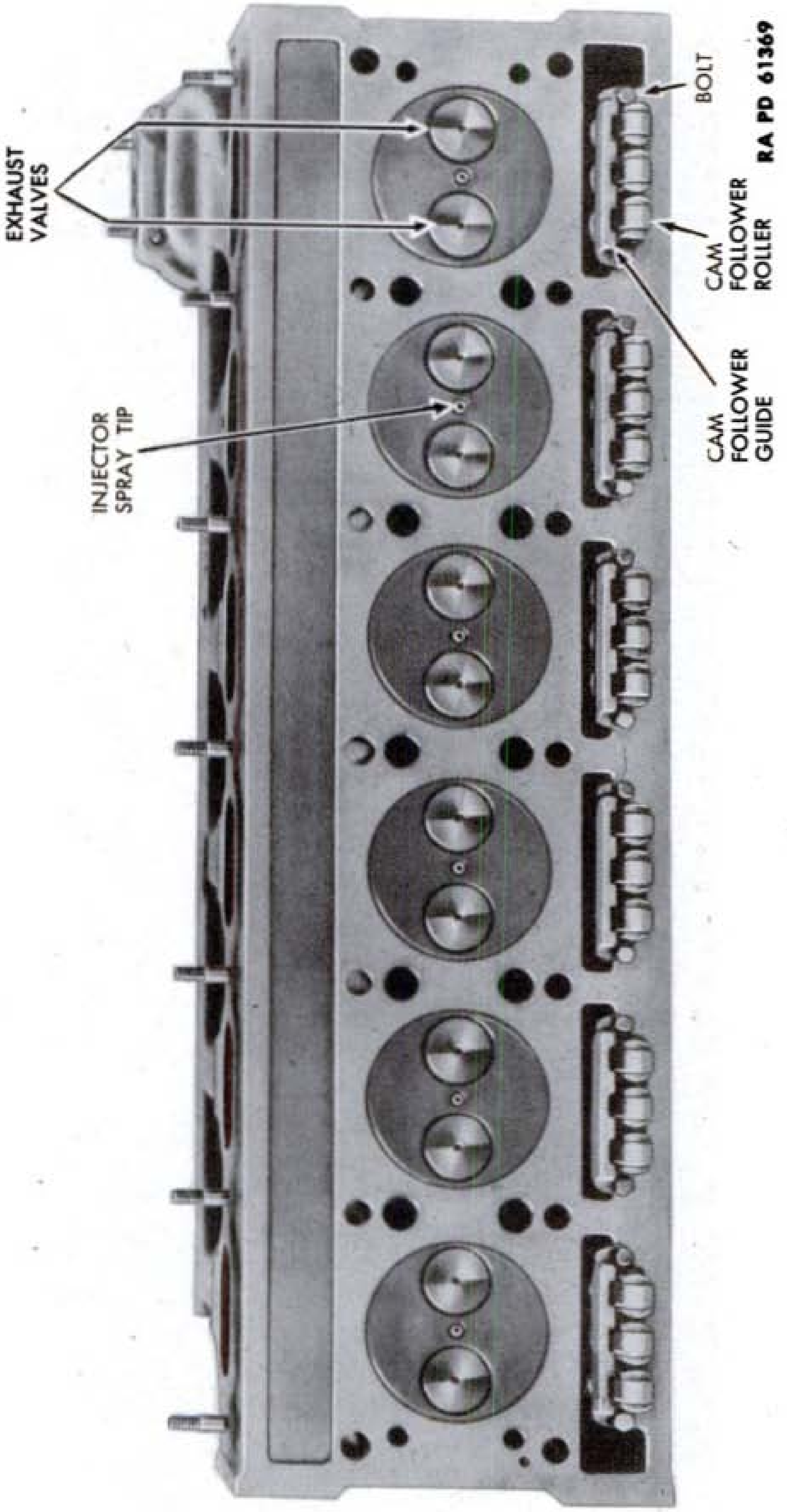

Figure 58—Cylinder Head Removed for Inspection

thermostat housing and remove each elbow. At upper end of each water bypass tube, remove the seal and union nut. Loosen two hose clamps at each end of radiator to engine tube for engine from which cylinder head is to be removed. Slide hoses onto tube and remove tube. Take out four bolts and remove thermostat housing and two thermostats. Remove four bolts attaching elbow to exhaust manifold. Spring exhaust elbow away from manifold and remove gasket. Take out four bolts and remove engine lifter bracket on each end of engine. Remove four bolts attaching cylinder head vent to flywheel housing and cylinder head and remove vent. At end of water manifold, hold bushing with wrench and unscrew nut and remove water temperature gage tube. Drain secondary fuel filter. Disconnect hose from fuel return manifold. Disconnect oil tank vent hose at flywheel housing. Remove bolt which attaches fuel tube clip to flywheel housing. Disconnect fuel tube at fuel pump and secondary fuel filter and remove tube. Disconnect governor control lever link from lever. Disconnect spring from governor control lever. Remove governor cover (par. 70 **b** (1)). Remove rocker arm cover (par. 82 **b**). Disconnect both ends of governor control tube link and remove link (par. 69 **b**). Loosen two bolts which attach governor breather tube clips to oil cooler housing. Remove two screws attaching tube elbow to governor control housing and remove breather tube. Remove four bolts which attach governor control housing to governor weight housing and remove cover from housing. Remove two bolts which attach governor control housing to cylinder head and remove governor control housing. Use cylinder head stud nut wrench (41-W-872-300) and remove the 14 stud nuts. Attach hooks of lifting hook (41-H-2584) in vent holes at ends of cylinder head. Lift cylinder head off engine, keeping it level so it does not bind on studs. Carefully lower cylinder head onto blocks placed so as not to damage injector tips which project below lower face of cylinder head. Remove cylinder head gasket and four cylinder head oil gaskets.

b. Inspection Before Cylinder Head Installation. With the cylinder head removed a thorough inspection of pistons, cylinder liners, and top of cylinder block must be made. If additional repairs are necessary, report to higher authority. Press auxiliary starter button to crank engine as required to examine cylinder liners for scuffing or scoring and to position pistons at tops of cylinders when cleaning carbon off pistons. CAUTION: *Do not allow cylinder liners to work up while head is off*. Thoroughly clean carbon from heads of pistons. Examine cylinder block for cracks or leaks around cylinder liners. Inspect cylinder head and parts (fig. 70). Carefully examine injector tips and if they are burned, replace injectors (par. 68 **d**). Examine cam follower rollers and if they are worn or damaged replace followers by removing cam follower guides and sliding cam followers

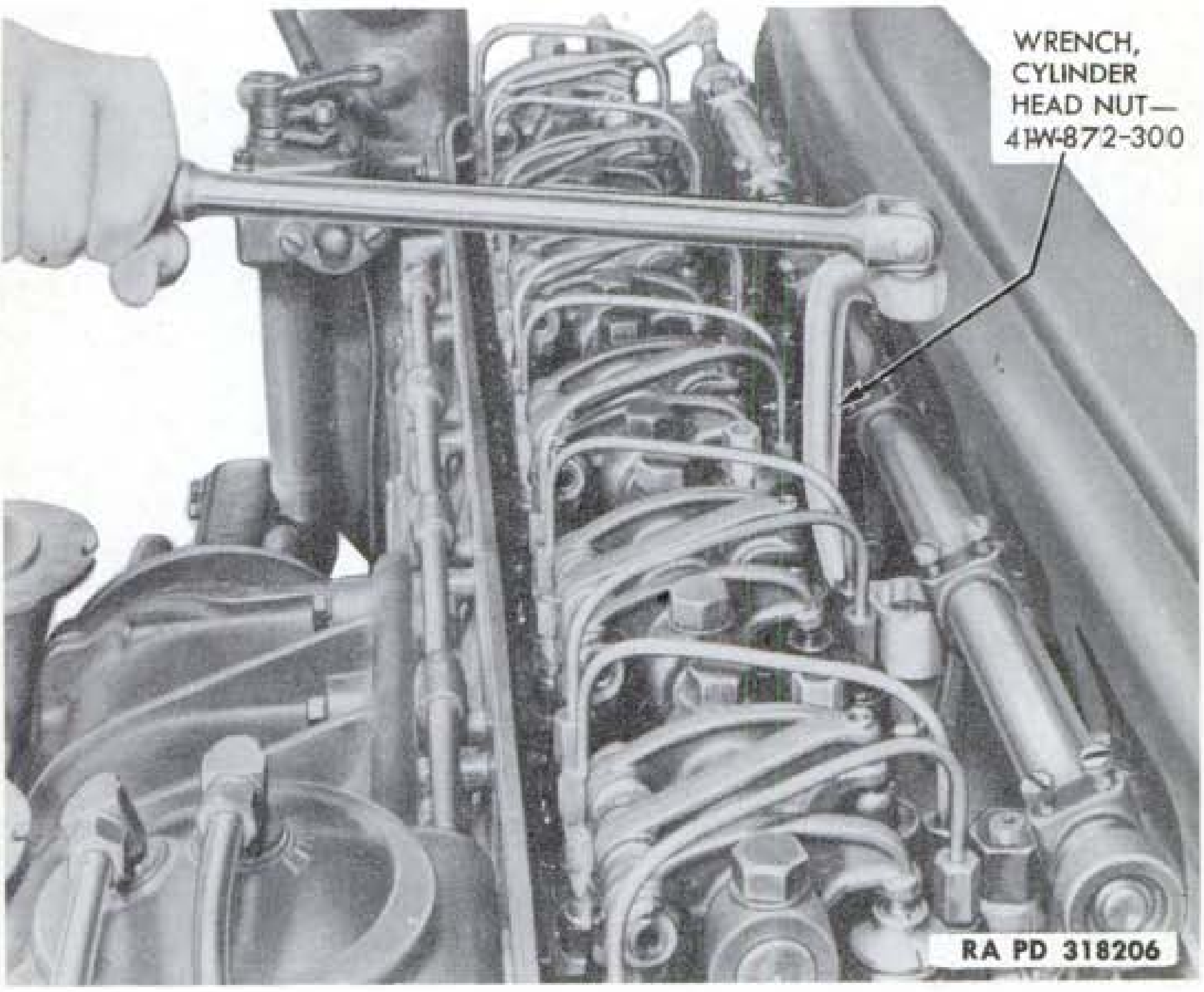

Figure 59—Tightening Cylinder Head Nuts

out of cylinder head from lower side. Crank engine with starter and examine cams on camshaft and if damaged notify higher authority. Thoroughly clean carbon out of cylinder head combustion chambers and off heads of valves. Examine cylinder head for cracks. Examine the water manifold and exhaust manifold for cracks or evidence of leaking gaskets. Replace parts as required.

c. **Installation of Cylinder Head.** Make sure that gasket surfaces on the exhaust manifold and elbow, cylinder block and head are perfectly clean. Position new cylinder head gasket, with side marked "TOP" facing up, over the studs. Attach new cylinder head oil gaskets in position on cylinder block using non-hardening gasket cement. Attach hooks on lifting hook (41-H-2584) in vent holes at ends of cylinder head. Guide cylinder head while it is being lowered on studs, and keep it level so it does not bind on the studs and make sure exhaust manifold clears the exhaust elbow and water bypass tube. Remove lifting hook. Install the 14 cylinder head stud nuts with machined faces down. Screw all nuts down with light pressure (fig. 59). Then, starting at the center and progressing alternately toward each end, tighten the nuts using wrench (41-W-872-300) in combination with torque wrench with 160-170 foot-pounds pull. Cylinder head nuts must be tightened again after the engine has been thoroughly warmed up. Use two new gaskets and attach lifter brackets to flywheel housing and cylinder head with four bolts and lock washers and tighten bolts. Use two new gaskets and attach cylinder head vent to flywheel housing and cylinder head with four bolts and lock washers and tighten bolts. Install water temperature gage tube in end of water manifold and tighten nut in bushing. Connect lubricating oil tank vent hose to flywheel housing. Connect fuel hose to fuel return manifold. Connect fuel tube to outlet connection on fuel pump and inlet connection on secondary fuel filter and tighten. Install fuel tube clip on flywheel housing and tighten bolt. Install filter panel assembly (par. 94 c) and make sure all connections are tight. Spring the exhaust elbow away sufficiently from manifold, and insert new gasket. Attach elbow to exhaust manifold with four bolts and lock washers, and tighten bolts evenly to compress gasket uniformly. Put two union nuts over end of water bypass tubes and place new seal on each tube. Install thermostats. Install thermostat housing with new gasket, insert four bolts with lock washers and tighten. Place each water bypass tube elbow on tube and start union nut. Use new gaskets and attach each elbow to thermostat housings with two bolts and lock washers and tighten bolts. Tighten both union nuts. Install radiator to engine tube, properly positioned, and tighten the four hose clamps. Use two new gaskets, attach engine lifter bracket to cylinder head and balance weight cover with four bolts and lock washers, and tighten bolts. If governor control housing to weight housing gasket has been damaged, remove gasket, clean face of housing and shellac new gasket to housing. Position governor control housing. Look through opening in governor weight housing to make sure that bearing and thrust washer are against end of riser and governor operating shaft fork has the machined surface of the fork in contact with the governor weight shaft thrust bearing washer and is not entered between thrust washer and bearing. Pull control housing into position over dowels in weight housing. Install governor weight housing cover with new gasket and four bolts and lock washers and tighten bolts. Insert new gasket between flange on governor control housing and cylinder head, install two bolts with lock washers and tighten bolts. Tighten governor weight housing to blower end plate cover bolts with fuel pump wrench (41-W-495-100). Using new gasket, attach breather tube elbow to governor control housing with two bolts and lock washers and tighten bolts. Install two clamp bolts, with lock washers, which attach breather tube to oil cooler housing and tighten bolts. Pour ½ pint of engine oil over the parts in the top of governor control housing to provide initial lubrication. Position control tube link and connect it to control tube lever and governor differential lever. Install governor cover using new gasket and tighten screws. Install governor breather tube using new gasket and tighten screws on governor control housing and the clamp bolts on oil cooler housing. Connect governor control lever link to governor control lever using new cotter pin. Connect governor control lever retracting spring. Install air cleaners (par. 99 f). Fill engine cooling system (par. 103 c). Loosen outlet fitting on secondary fuel filter. Turn fuel tank selector valve to RH or LH. Lock out both clutches. Start and run other engine to bleed fuel system (par. 95 d). Stop engine and start and run engine on which cylinder head was installed until engine is warmed up to 140°F. Examine all fuel, oil and water connections and gaskets for leaks and tighten as required. Stop engine. Tighten all cylinder head stud nuts again using a pull of 180 foot-pounds on the torque wrench. To insure balanced operation of the engine and peak performance, time all injectors (par. 68 c) and adjust all valves (par. 83). Install rocker arm cover (par. 82 c). Start both engines and test for properly synchronized engine speed (par. 73) and adjust if required. Install engine compartment splash panel (par. 168 e). Install engine compartment cover plates as a unit (par. 167 f).

Section XV

AIR INTAKE AND FUEL SUPPLY SYSTEMS

87. AIR INTAKE AND FUEL SUPPLY SYSTEMS.

a. Description of Air Intake System. The air intake system for each engine consists of three air cleaners, an air inlet housing with emergency stop valve, blower and air box (fig. 32). Air drawn through the air cleaners and inlet housing by the blower is forced under pressure into the air box which surrounds the lower portion of the cylinders, and then into the cylinders whenever the air ports are uncovered by the pistons (fig. 60). Two air heaters (fig. 39), installed in handhole openings on inner side of each engine, are used to preheat the air in the air box for quick starting in cold weather.

b. Description of Fuel Supply System. The fuel supply system comprises two sets of fuel tanks, a fuel tank selector valve; also separate primary and secondary fuel filters and a fuel pump for each engine (fig. 58). Fuel from either set of tanks, depending upon the position of the fuel tank selector valve, flows through the primary filters to the fuel pumps. Each fuel pump forces the fuel through a secondary filter and into a fuel inlet manifold which supplies the injectors. Surplus fuel flowing through the injectors into the fuel outlet manifold is pumped back into the fuel tank. Continuous circulation of the fuel helps cool the injectors and keeps the fuel feed system purged of air.

88. AIR CLEANERS.

a. Description. Three heavy-duty oil-bath air cleaners, mounted on each air intake housing, filter incoming air to the engines. Air

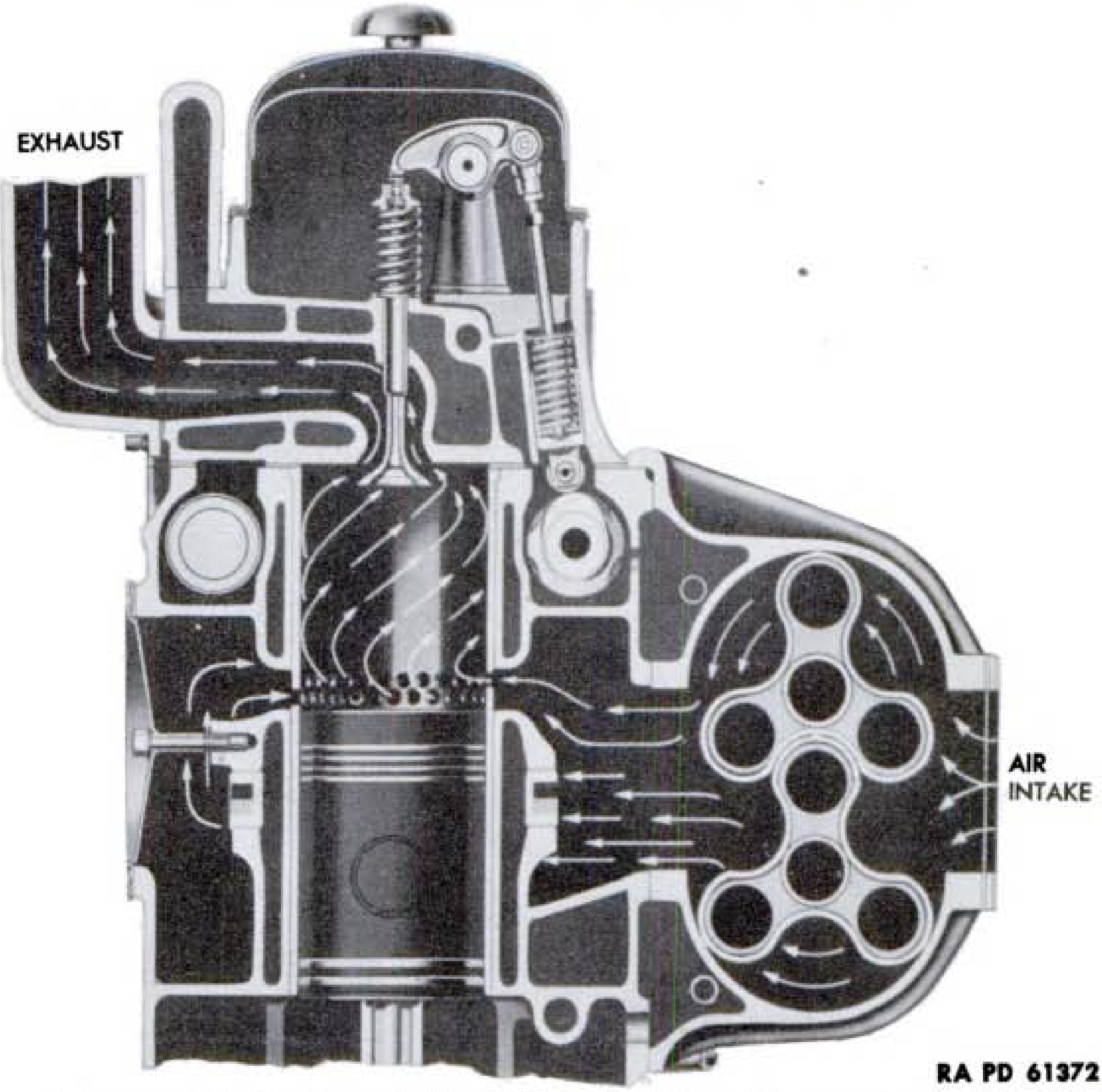

Figure 60—Sectional View Showing How Blower Forces Air Into Cylinders

drawn into a cleaner passes down over the oil in the reservoir where the larger particles of dust are trapped. The air then passes up through the oil-wetted metallic filtering element and down the center duct to the blower. Two types of air cleaners (fig. 63) differing slightly in construction are used. The A.C. type is identified by horizontal louvers in the upper section and the Donaldson type by vertical openings. All six air cleaners on any one power unit must be of the same type.

b. Removal of Air Cleaners. Open engine compartment doors (par. 167 **a**). Raise and lock engine splash panel (par. 168 **b**). Thoroughly wipe off outside of air cleaners, particularly the bottom, to prevent dirt dropping into air inlet housing when air cleaners are removed. Beginning with center air cleaner on each side, unscrew wing bolt at top and lift off air cleaners (fig. 62). Immediately cover air intake housing ports with clean board, plugs or tape. Do not use rags or paper.

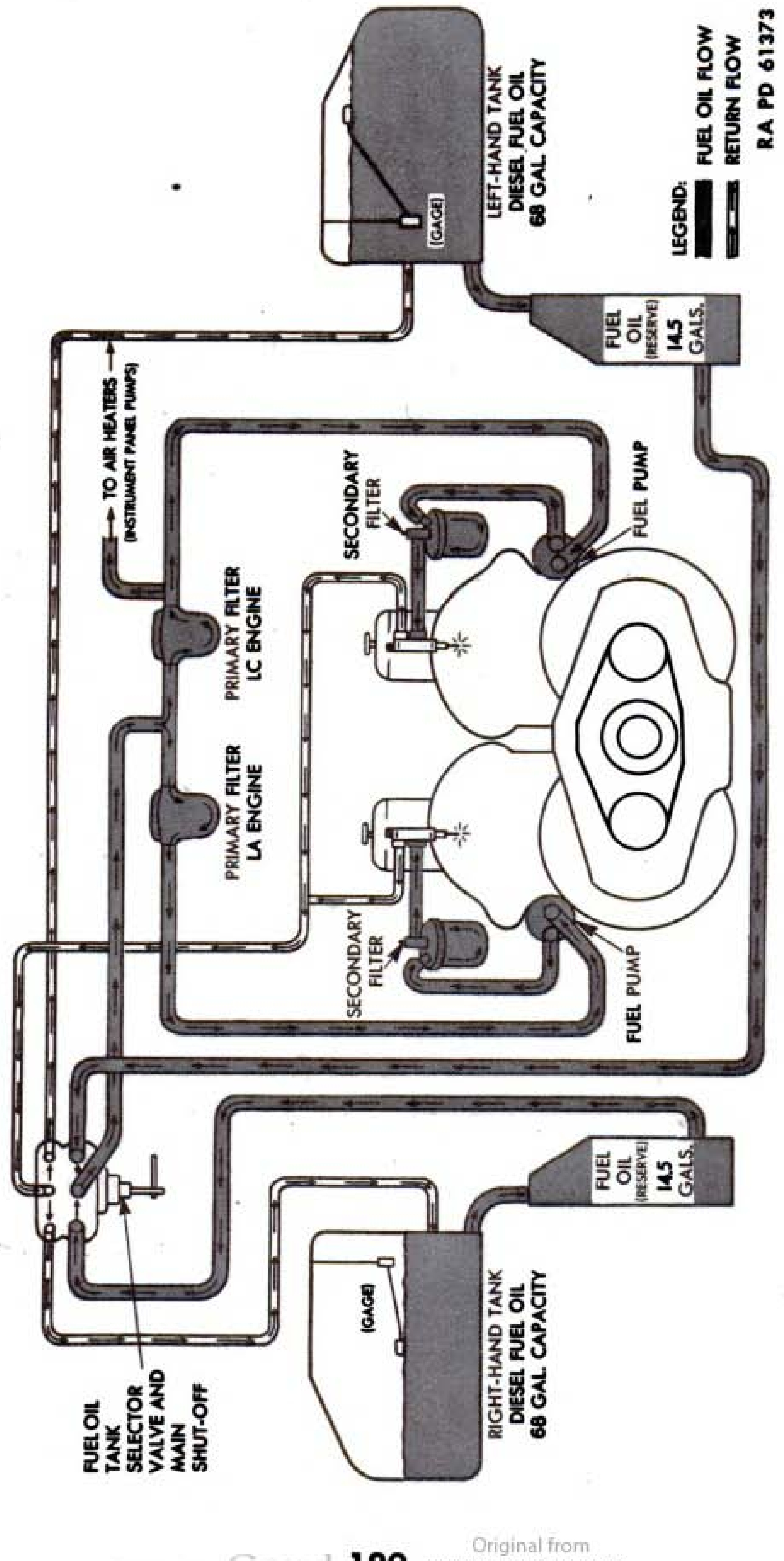

Figure 61—Fuel System Diagram

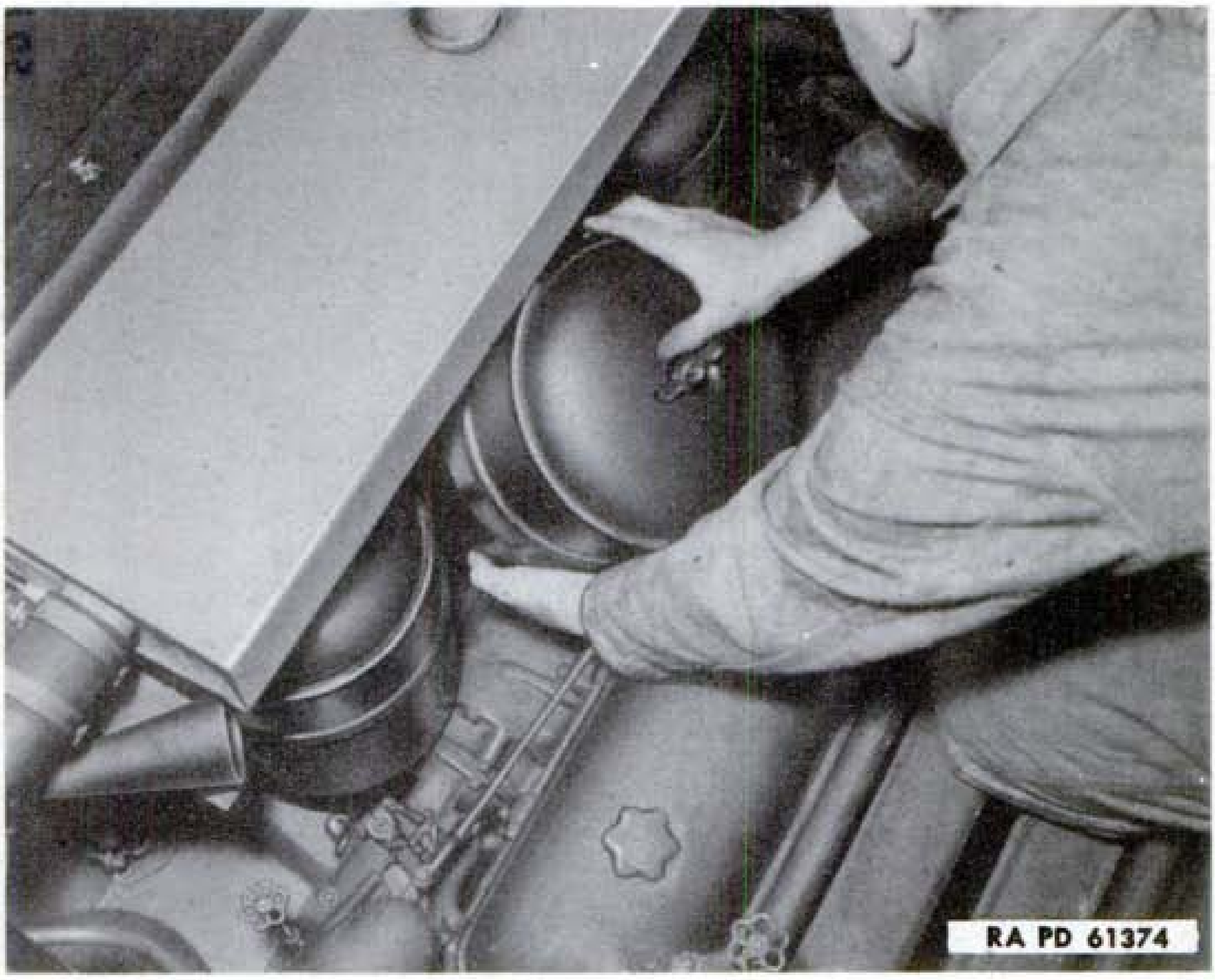

Figure 62—Removing Air Cleaners

c. **Servicing Air Cleaners.** The oil level must be maintained at, but not above, the bead level mark (fig. 63). If the reservoirs are filled to a point above the level mark, the excess lubricating oil will be drawn over into the blower and forced into the cylinders in vapor form. This may cause serious damage. The reservoirs must be cleaned before the quantity of trapped dirt exceeds ½-inch in depth or at every 50- and 100-hour Preventive Maintenance Service (par. 33, item 43). The elements must be cleaned whenever inspection shows that any appreciable quantity of dirt has accumulated to restrict the flow of air.

d. **Refilling Air Cleaner Reservoirs.** Remove all six air cleaners (par. 88 **b**). Inspect body and reservoir for leaks. Lift off upper section. NOTE: *On Donaldson type, remove snap ring and baffle in base.* Empty reservoir and scrape out trapped sediment (fig. 63). Wipe reservoir clean with cloth soaked in Diesel fuel. Examine seals at under side of reservoir and between upper and lower sections and, if necessary, replace seals to insure airtight connections. On Donaldson type, install baffle and snap ring. Pour engine oil or used crankcase oil, seasonal grade, into reservoir to lever of mark (fig. 63). Do not fill reservoir above level mark. Place upper section on lower section. Install air cleaners (par. 88 **f**).

Figure 63—Air Cleaners, Disassembled

e. Cleaning Air Cleaner Elements. With all six air cleaners removed lift off top sections. Partially fill suitable container with Diesel fuel. CAUTION: *Do not use gasoline or other solvents to clean air cleaners on Diesel engines.* Submerge the upper section in the Diesel fuel and move it up and down to thoroughly wash the element. Remove upper section from cleaning bath, shake to remove as much Diesel fuel as possible and stand upright to permit element to drain dry. Elements must be dry and must not be coated with engine lubricating oil before installation of air cleaners on the Diesel engines. When elements are dry, fill reservoir (par. 88 **d**), and place upper section on lower section.

f. Installation of Air Cleaners. Remove protective covering from air intake housing. Position front air cleaner being careful not to spill any oil from reservoir or get dirt into air intake housing. Screw

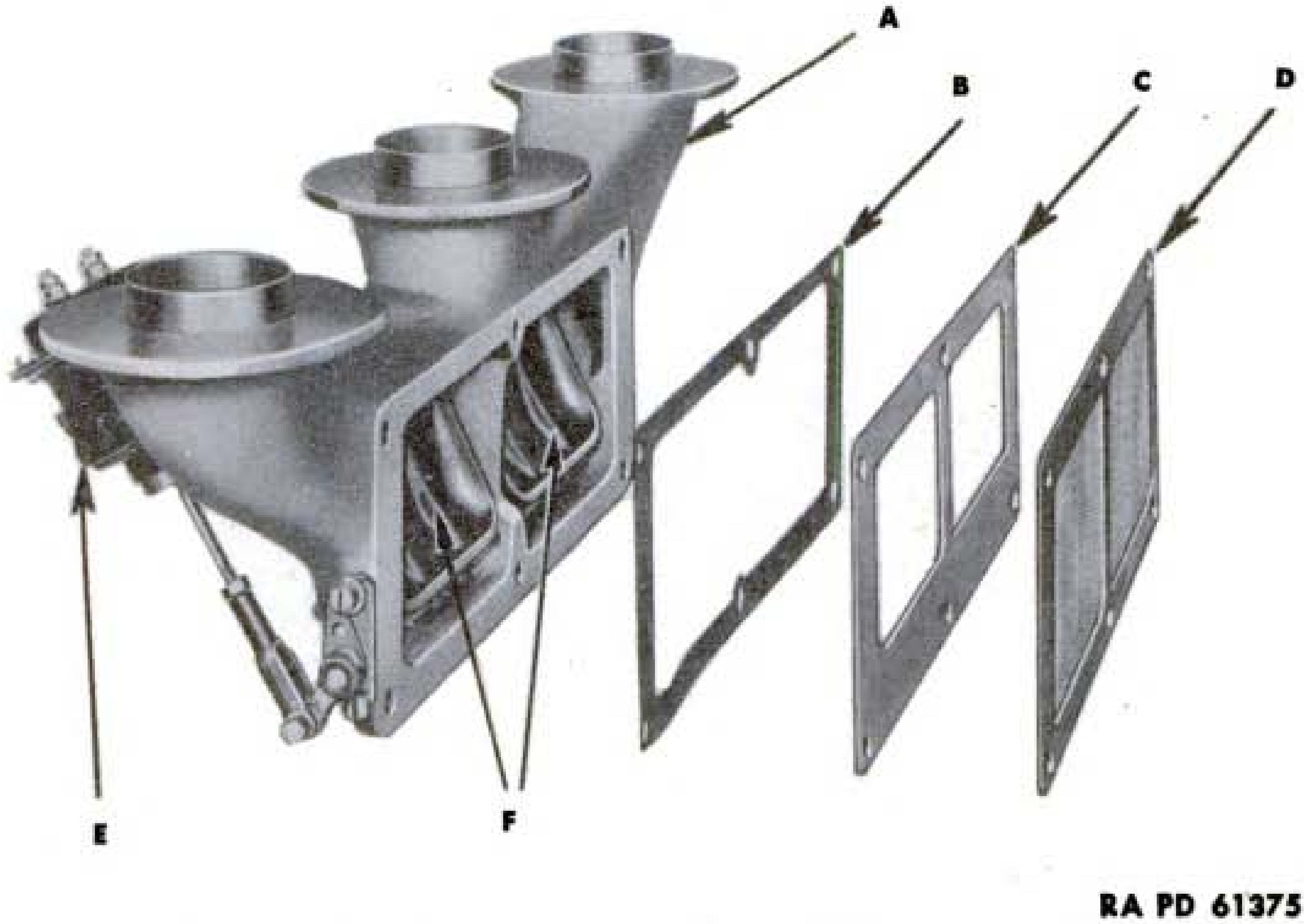

A — AIR INLET HOUSING
B — STRIKER PLATE GASKET
C — STRIKER PLATE
D — SCREEN
E — AIR SHUTDOWN VALVE SOLENOID
F — AIR SHUTDOWN VALVE

Figure 64—Air Inlet Housing

wing bolt down tight to make positive seal with housing. Next install rear cleaner, then center cleaner. Lower splash panel and hook into place and close and bolt engine compartment doors.

89. EMERGENCY STOP VALVES.

a. Description. Solenoid operated flapper valves, one in the air inlet housing on each engine (fig. 64) are used only in emergency to stop the engines in case they do not stop when the throttle is moved to "NO FUEL" position or if the governors fail to control engine speed. When the emergency stop button is pressed, the solenoid (fig. 64) raises the valve into position against the metal striker plate in the air inlet housing shutting off the incoming air and starving the engine. A metal screen between the air inlet housing and blower prevents foreign material from entering the blower.

b. Removal of Air Inlet Housing. The air inlet housing and emergency stop valve with solenoid are removed and installed as an assembly. Remove engine compartment door and side plate (par. 167 **c**). Raise and lock engine splash panel (par. 168 **b**). Remove air cleaners (par. 88 **b**). Disconnect lead and ground wires on solenoid. Thoroughly wipe off exterior of air inlet housing and blower housing. Remove six bolts and lock washers attaching air inlet housing to blower housing and lift out air inlet housing, gasket, striker plate and screen. Cover blower with clean cloth.

c. Inspection of Air Inlet Housing. Inspect air inlet housing for cracks or leaks. Operate emergency stop valve by hand to make sure it is not binding. Use striker plate as a straightedge against housing with valves in approximately closed position and test valves to see that they are not warped and that they close evenly. If either condition exists replace air inlet housing assembly. Test tension of return spring on operating lever. Examine valves in closed position to make sure that edges extend from $\frac{1}{32}$ to $\frac{1}{16}$ inch past inlet housing mounting face. If not, adjust solenoid clevis on threaded rod as required (fig. 64).

d. Installation of Air Inlet Housing. Screen must be clean and face of striker plate straight. Procure new inlet housing gasket. With air intake housing in approximate assembled position, insert two of the long bolts ($1\frac{7}{8}$ inches) with lock washers in top corner holes of housing. Position gasket on bolts. Then place striker plate on bolts with wide edge at bottom and next position the screen. Partially screw bolts into blower housing. Install long bolt ($1\frac{7}{8}$ inches) with lock washer in center hole in top and three short bolts ($1\frac{1}{4}$ inches) with lock washers in bottom holes. Tighten all bolts uniformly. Connect lead and ground wires to solenoid, and complete assembly by reversing removal procedure.

90. BLOWER.

a. Description. In the two-cycle Diesel engine the blower forces air into the cylinders to sweep out burned gases and supply fresh air for combustion. Air enters the blower from the air cleaners through the air inlet housing. Two hollow, spiral-shaped, three-bladed rotors in the blower housing force the air under pressure into the air box which surrounds the cylinders. The air enters the cylinder through ports and holes in the cylinder liners (fig. 60). The blower drive shaft is driven by the blower drive gear in the engine gear train.

91. AIR BOX.

a. Description. The air box is the large chamber within the cylinder block extending over its entire length on both sides of the cylinders. The air box serves as an intake manifold to distribute the incoming air to the cylinders, under pressure from the blower, through ports in the cylinder walls and holes in the cylinder liners. The interior of the air box is inspected and cleaned through the handholes which are provided with removable covers, two on the outer side and four on the inner side of each engine (fig. 65). Cleaning of the air box must be referred to higher authority.

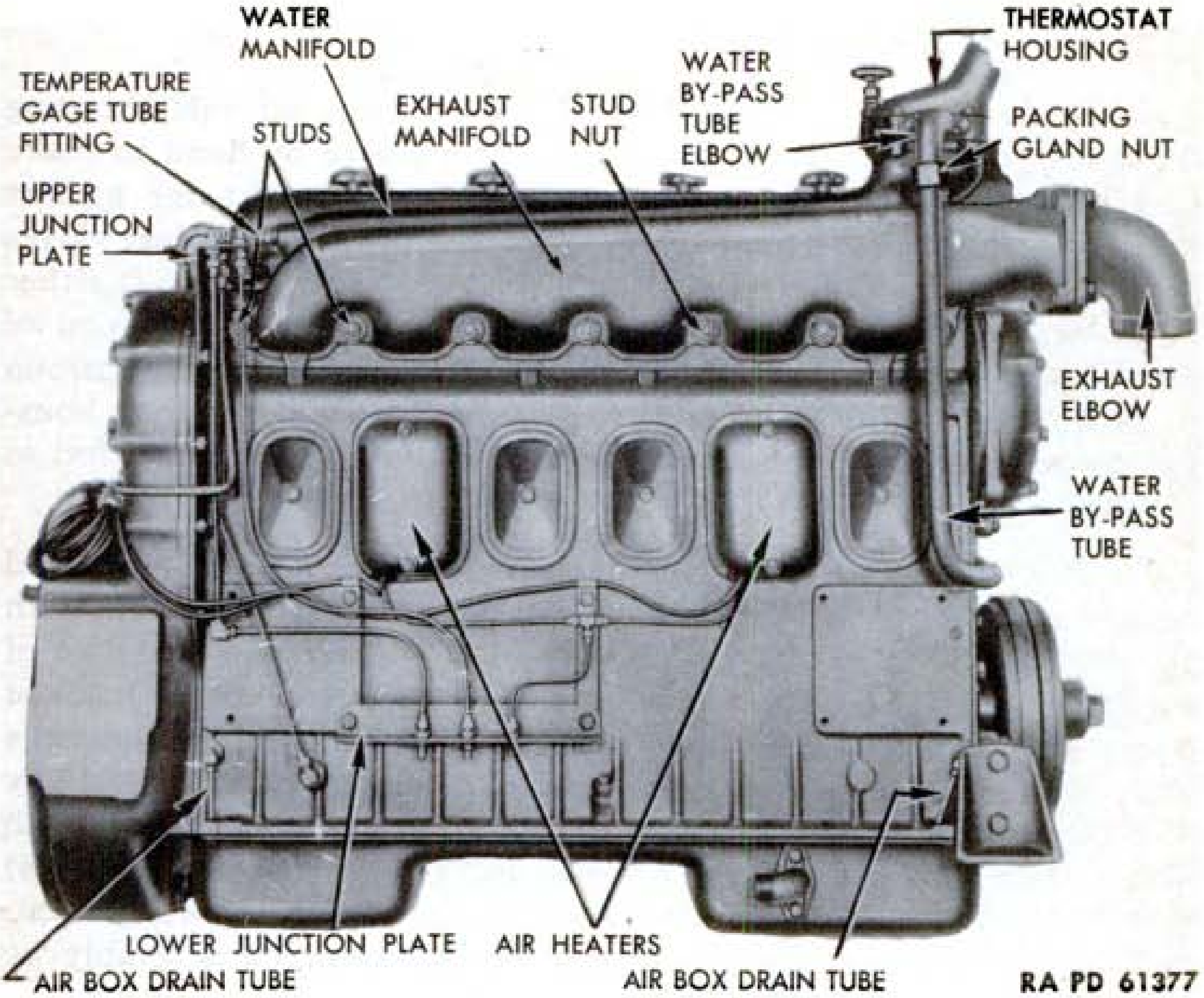

Figure 65—Inner Side of Right Engine

b. Clean Air Box Drains. Air box drains must be kept open at all times. If Diesel fuel or lubricating oil is permitted to accumulate in the air box, it may be drawn into the cylinders causing the engine to run away or burn the injector tips.

(1) INSPECT AIR BOX DRAINS. Remove engine compartment floor plates (par. 170 **b**). Start engines and run at 1,000 revolutions per minute. If a forceful stream of air can be felt at each end of the four air box drain tubes, the drains are open (fig. 65). If only a slight amount or no air at all is felt, the drain is clogged and must be cleaned.

(2) CLEAN AIR BOX DRAIN TUBES (fig. 62). Remove drain tubes from elbow and remove elbow from block. Use wire and compressed air if necessary to remove obstruction from drain tube and elbow. Install elbows and drain tubes in block and start engine to test for flow of air from both air box drains. If drains are still clogged, air box must be cleaned. Report to higher authority.

92. AIR HEATERS.

a. Description. Two air heaters are installed in the second and fifth handholes on the inner side of each engine (fig. 65). The air

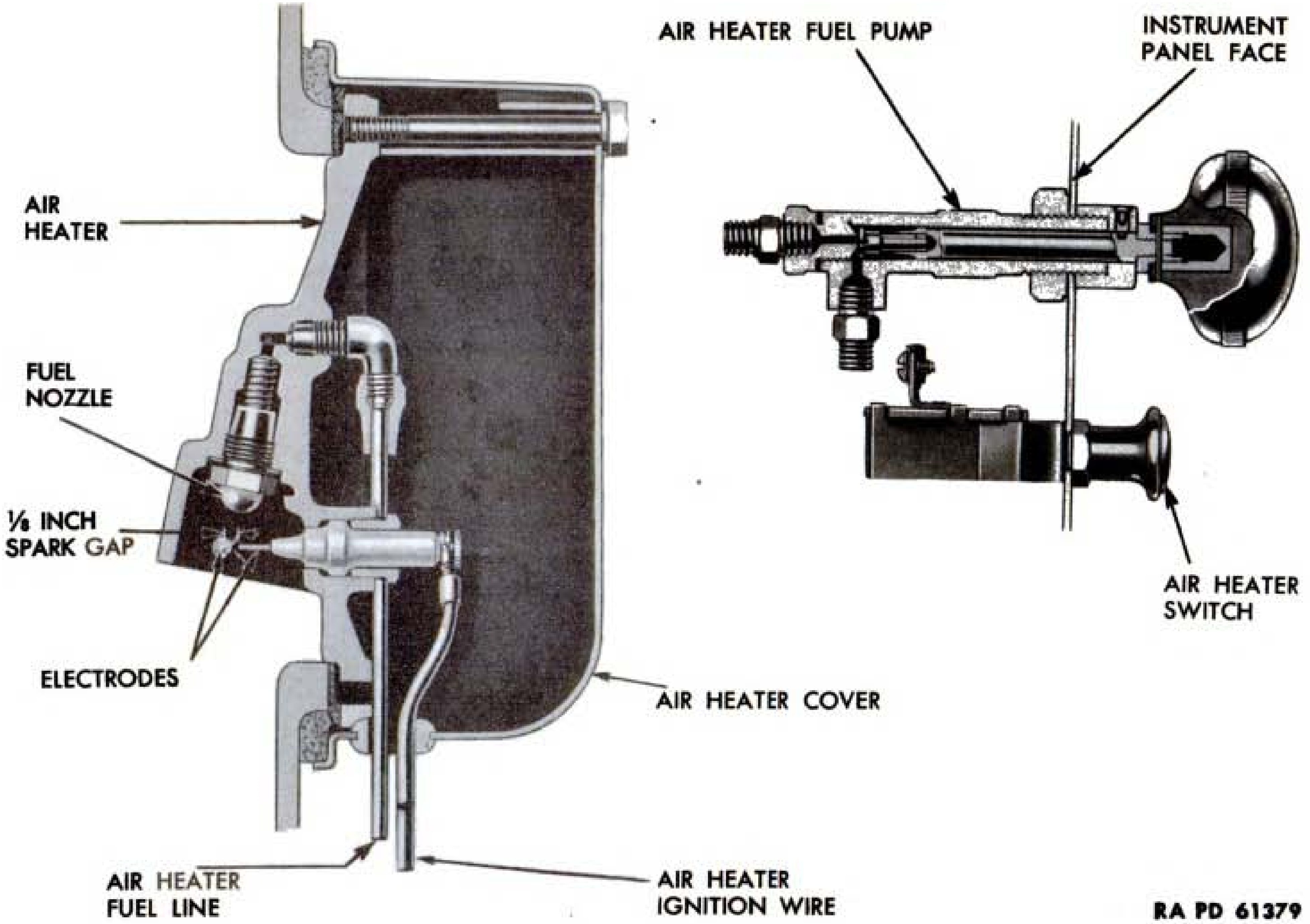

Figure 66—Air Heater and Controls

heaters are small Diesel fuel burners which preheat the incoming air to provide quicker starting in cold weather (fig. 66). Atomized fuel is forced out of the air heater nozzles by the action of the fuel pumps on the instrument panel (fig. 66), and ignited by an electric spark. The resulting flame heats the air in the air box before it enters the cylinders.

b. Removal of Air Heaters. Remove engine compartment floor plates (par. 170 **b**). Disconnect air heater fuel line at tee (fig. 65). Remove clamp which holds ignition wire in place under air heater. Loosen two bolts with lock washers which attach cover to air heater body. Slide cover down on air heater fuel line and ignition wire, until cover may be removed. Disconnect fuel line at elbow. Remove screw and lock washer attaching clip on fuel line at air heater body. Remove knurled nut from insulator and remove lead wire from electrode plug. Remove bolt, copper gasket, and flat washer attaching air heater body to cylinder block and remove air heater. Remove cork gasket and felt seal from cylinder block.

c. Maintenance of Air Heater. Air heater maintenance includes removing carbon, cleaning the nozzle and adjusting spark gap.

(1) REMOVE CARBON FROM AIR CLEANER. Remove insulator nut and copper gasket from insulator and remove insulator from air cleaner body. Remove electrode and lock washer from side of burner opening. Unscrew nozzle (5/8 thin-wall socket) from inside burner opening and remove nozzle, washer, filter and spring (fig. 66). Thoroughly scrape carbon from inner surface of air cleaner body and from within burner opening. Wash all parts in Diesel fuel, wipe dry and blow out threaded holes and passages with compressed air. Parts will be installed as described in following paragraphs.

(2) CLEAN AIR HEATER NOZZLE. Unscrew vortex plug from nozzle and remove plug. Carefully wash plug and nozzle in Diesel fuel. CAUTION: *Do not use steel wire or drill to clean orifices in nozzle or plug. Use only soft brass or copper wire. Damage to grooves in swirl pin or slightest change in size of nozzle hole will prevent proper functioning of burner.* Wipe parts clean and blow out with compressed air. Assemble vortex plug in nozzle with moderate force. Blow out filter with compressed air or replace if necessary. Insert spring and filter in air heater body. Install nozzle with washer and tighten (fig. 66).

(3) ADJUST AIR HEATER SPARK GAP (fig. 66). Thoroughly clean insulator and electrode, and inspect for cracks in porcelain or burned electrode. Place new copper gasket over electrode end of insulator and insert insulator in air heater body. Install nut over insulator and screw into body to compress copper gasket. Clean electrode or replace if burned. Place lock washer on electrode and screw into side of burner openings until tight. Adjust spark gap by bending screw

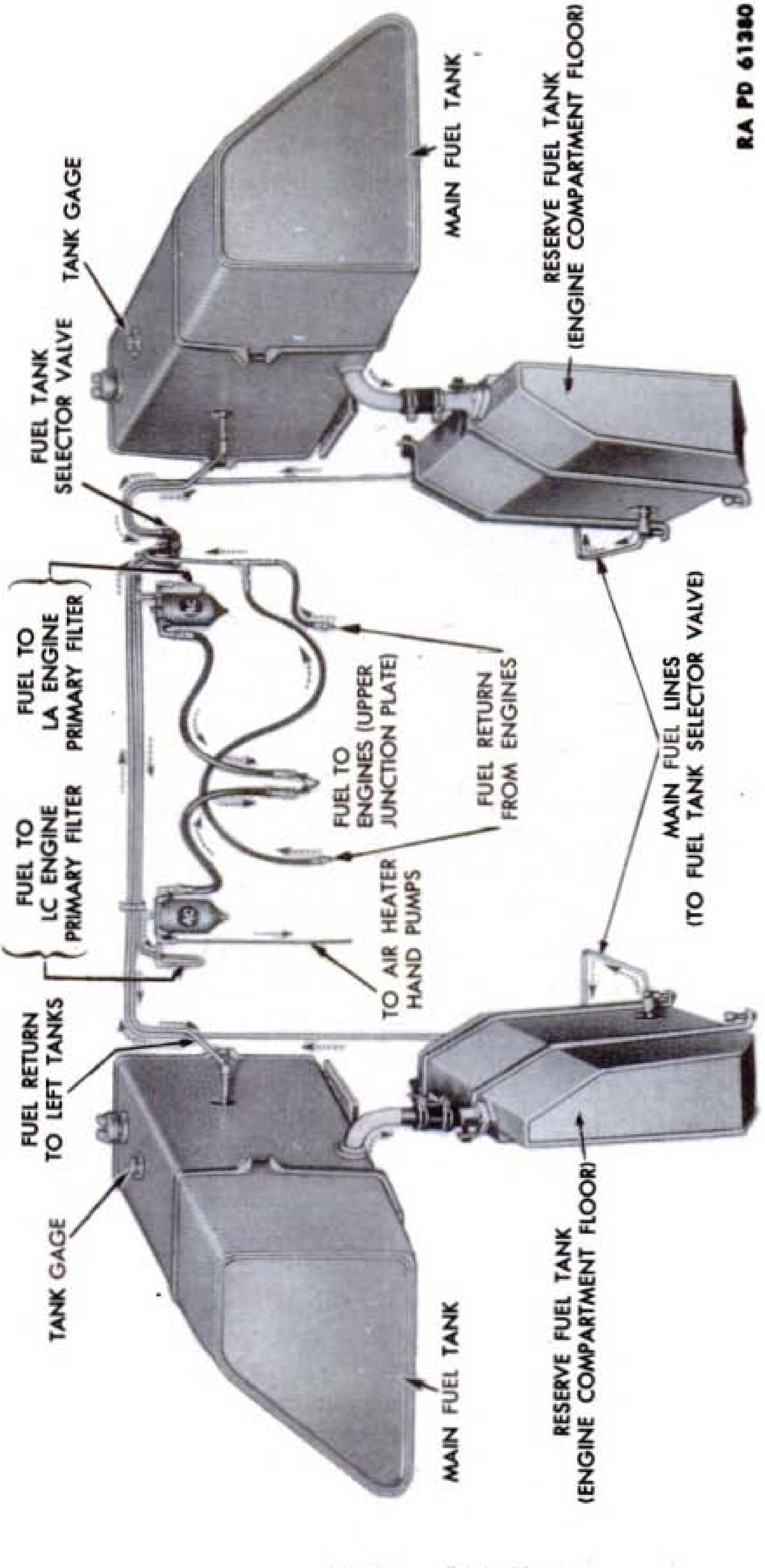

Figure 67—Fuel Supply System

electrode, not the one in the insulator, so $\frac{1}{8}$-inch drill or rod will pass freely through gap.

d. Test Air Heater Before Installation. Connect high tension lead to insulator. Hold air heater in contact with engine to provide a good ground connection. Turn on air heater switch (fig. 66) and observe spark. If spark is weak or intermittent, replace air heater coil for heater being tested (par. 212 **b**). Turn off air heater switch and disconnect high tension lead. Hold air heater up between the engines and connect fuel line to air heater. Turn fuel tank selector valve to LH or RH position. Open air heater fuel valve on instrument panel, but be sure air heater switch is OFF, (fig. 10) and while pump is being operated, observe spray from nozzle which should be cone shaped. A weak spray is an indication of faulty pump action or plugged line. Close fuel valve and disconnect fuel line. CAUTION: *Do not ignite the atomized Diesel fuel as a serious fire may result.*

e. Installation of Air Heater. Replace felt seal if required and coat one side of the seal with general purpose grease to hold it in position around air heater opening. Inspect cork gasket and replace if necessary. Coat one side of gasket with general purpose grease and place it in position on inner side of air heater body. Carefully position air heater in cylinder block so as not to dislodge seal or gasket. Place flat washer and new copper gasket on bolt, insert in air heater and screw it tightly into cylinder block. Screw bolt into cylinder block until tight. Connect fuel line to elbow (fig. 66). Place lead wire on insulator, install and tighten knurled nut. Position fuel line clip and install screw with lock washer in hole in air heater body and tighten. Insert two bolts with lock washers in cover. Slide up ignition wire and fuel line and into position, making sure fuel line and lead wire are entered in rubber grommet and that felt seal is inside lip of cover (fig. 66). Tighten down cover bolts. Connect fuel line at tee and install ignition wire clamp. Install engine compartment floor plates (par. 170 **c**).

93. FUEL TANKS.

a. Description. The Diesel fuel is stored in two sets of fuel tanks, one set on each side, in the engine compartment (fig. 67). Each upper tank has a capacity of 68 gallons. Each lower fuel tank, on the floor of the engine compartment, has a capacity of $14\frac{1}{2}$ gallons and is connected to the upper tank. Only the upper tanks are equipped with fuel gages so that after the fuel in both upper tanks has been consumed the lower tanks provide a reserve fuel supply. Each lower tank is filled through the upper tank which has a filler opening equipped with a strainer. The strainer must always be in place when tanks are being filled. Fuel is fed to both engines from the lower tank on either side depending upon the way the fuel tank selector valve is set. The overflow from the fuel injectors is returned to the upper tank of the set in use.

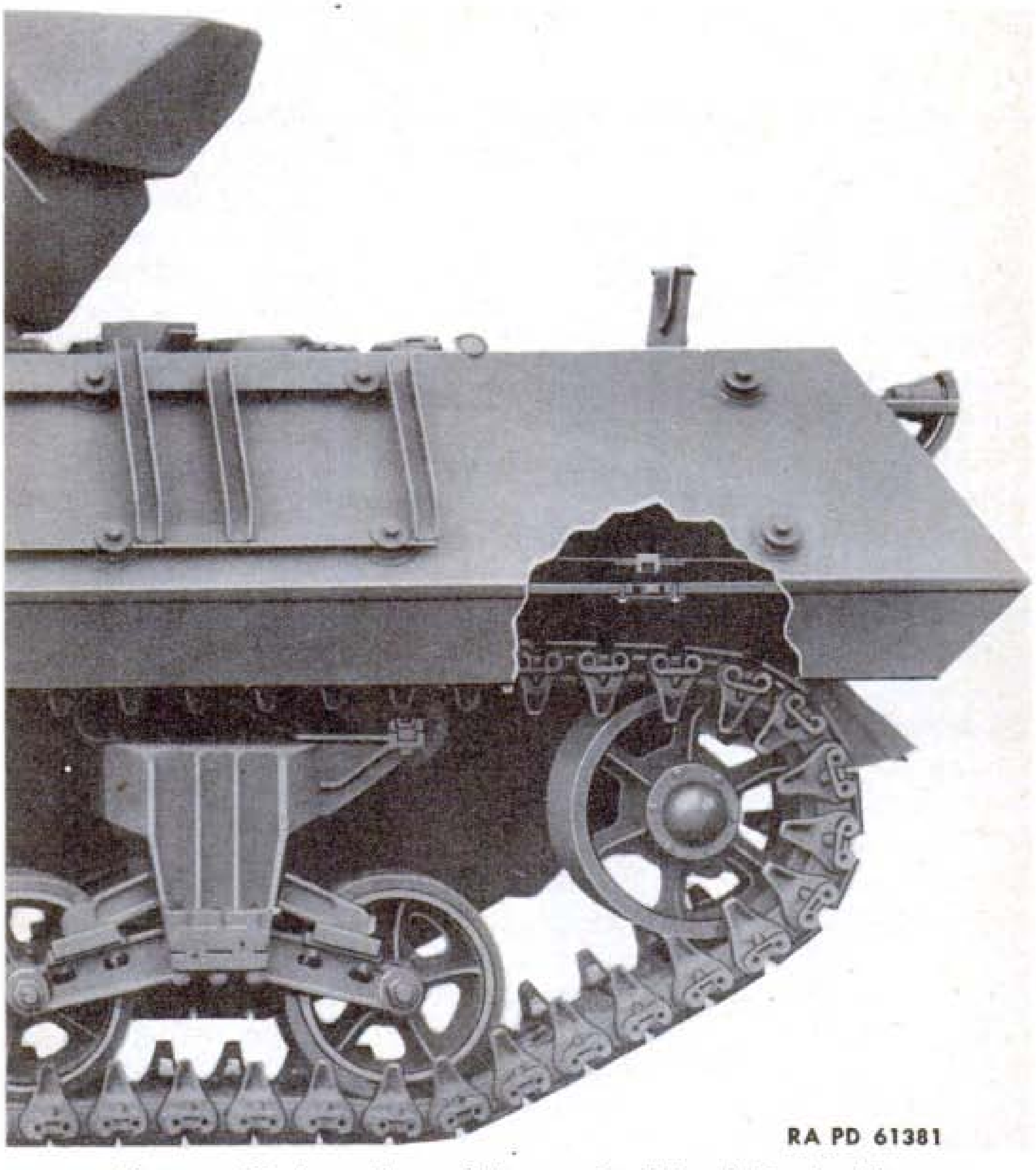

RA PD 61381

Figure 68—Location of Upper Fuel Tank Drain Plug

b. Precautions When Filling Fuel Tanks. Every possible precaution must be taken to prevent dirt or water from entering the fuel tanks. Hose nozzles or funnels used in filling the tanks must be wiped clean before they are inserted in the filler opening. Strainer in filler opening must always be in place when filling the tanks.

c. Filling Fuel Tanks. Remove lock pin from cover marked "Diesel Fuel" at rear of turret (fig. 8). Wipe off filler cap. Remove filler cap using lock pin as bar to turn cap if necessary. Turn tank gage control switch on instrument panel (fig. 10) to L or R under FUEL to correspond with set of tanks being filled. Fill tanks until fuel and oil gage (fig. 10) reads FULL which is when fuel will be level with bottom of strainer in filler neck. This allows space in the tank for expansion of the fuel. Make sure filler cap gasket is not damaged and

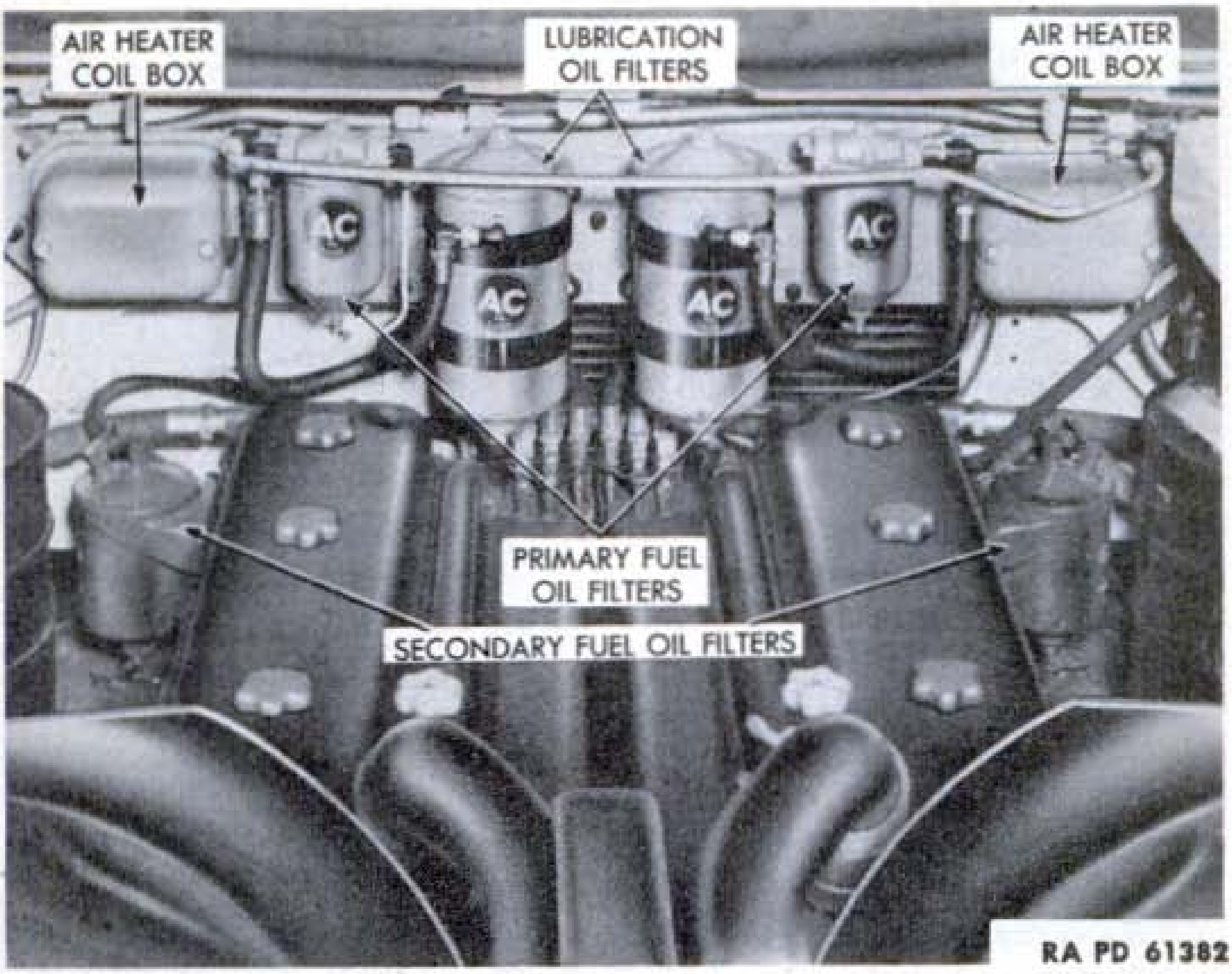

Figure 69—Filter Panel Assembly

filler cap vent is not clogged. Screw filler cap on and tighten with lock pin. Close filler cover and lock by inserting lock pin. Repeat procedure for set of fuel tanks on other side.

d. **Draining Fuel Tanks.** If the Diesel fuel has been contaminated with dirt, water or lubricating oil, both the upper and lower fuel tanks in the set of tanks affected must be drained.

(1) DRAIN UPPER FUEL TANK. Working outside the vehicle and under the sponson, remove three bolts which attach the drain plug cover to the sponson floor at rear and remove cover (fig. 68). Provide a small trough, preferably sheet metal, to deflect the fuel out over the track into a container. Use plug wrench (41-W-1960) and remove the drain plug. After fuel tank has been drained dry, install drain plug and tighten securely. Install cover plate with three bolts and tighten securely.

(2) DRAIN LOWER FUEL TANK. From beneath vehicle, take out two bolts and lock washers which attach drain plug cover to engine compartment floor (fig. 140). Remove cover and gasket. Position suitable container under drain plug. Use plug wrench (41-W-1960) and remove drain plug. After fuel tank has drained, install and tighten drain plug (fig. 140). Using new gasket, install cover plate with two bolts and lock washers and tighten bolts.

94. FILTER PANEL ASSEMBLY.

a. Description. The filter panel assembly (fig. 69) is bolted to the rear side of the engine compartment bulkhead. It consists of a panel on which are mounted the engine lubricating oil filter, the primary fuel filter, the air heater ignition coils, and auxiliary starter button for each of the two engines.

b. Removal of Filter Panel Assembly. Turn battery master switch off. Raise battery box cover and disconnect ground cable from rear battery. Turn fuel tank selector valve to "OFF." Open engine compartment doors (par. 167 **a**). Raise and lock engine compartment splash panel (par. 168 **b**). Drain engine lubricating oil filters and fuel filters. At right end of panel disconnect fuel supply tube at tee connection. Disconnect the small air heater fuel supply tube from primary fuel filter. Disconnect two fuel supply hoses and four lubricating oil hoses at the upper junction plates on the engines. Remove two bolts and take off air heater coil covers on each end of panel. Disconnect high tension wire from each of the ignition coils. Push grommets through holes in panels and pull out the high tension wires and place on engine manifolds. Remove No. 3 air cleaners (fig. 33) for access to terminal box on each side of engine compartment. Remove screws and terminal box covers. In right terminal box, disconnect the three wires in conduit leading to filter panel. Unscrew conduit coupling nut and remove conduit. In left terminal box, disconnect the two wires in conduit leading to filter panel. Unscrew conduit coupling nut and remove conduit. Remove all filter panel bolts except those on ends of panel. Support panel and remove end bolts. Lift panel out of engine compartment.

c. Installation of Filter Panel. Place panel on valve rocker covers and insert the four high tension wires from rear of panel and push grommets into holes. Attach filter panel to engine compartment bulkhead using lock washers on bolts and tighten bolts. Fill both primary fuel filters with Diesel fuel. Complete the installation by reversing the removal procedure. Connect battery ground cable, lower battery box cover and fasten. Turn battery master switch on. Turn fuel tank selector valve to LH or RH. Test air heater coils (par. 51 **b** (13)). Press each auxiliary starter button to make sure starters operate. Start one engine and bleed fuel system (par. 96 **b**). Start other engine and examine all connections for leaks. Check oil level (par. 56 **b**). Lower engine compartment splash panel and hook in place. Close and bolt engine compartment doors.

95. PRIMARY FUEL FILTER.

a. Description. Two primary fuel filters, one for each engine, are mounted at opposite ends of the filter panel in the engine com-

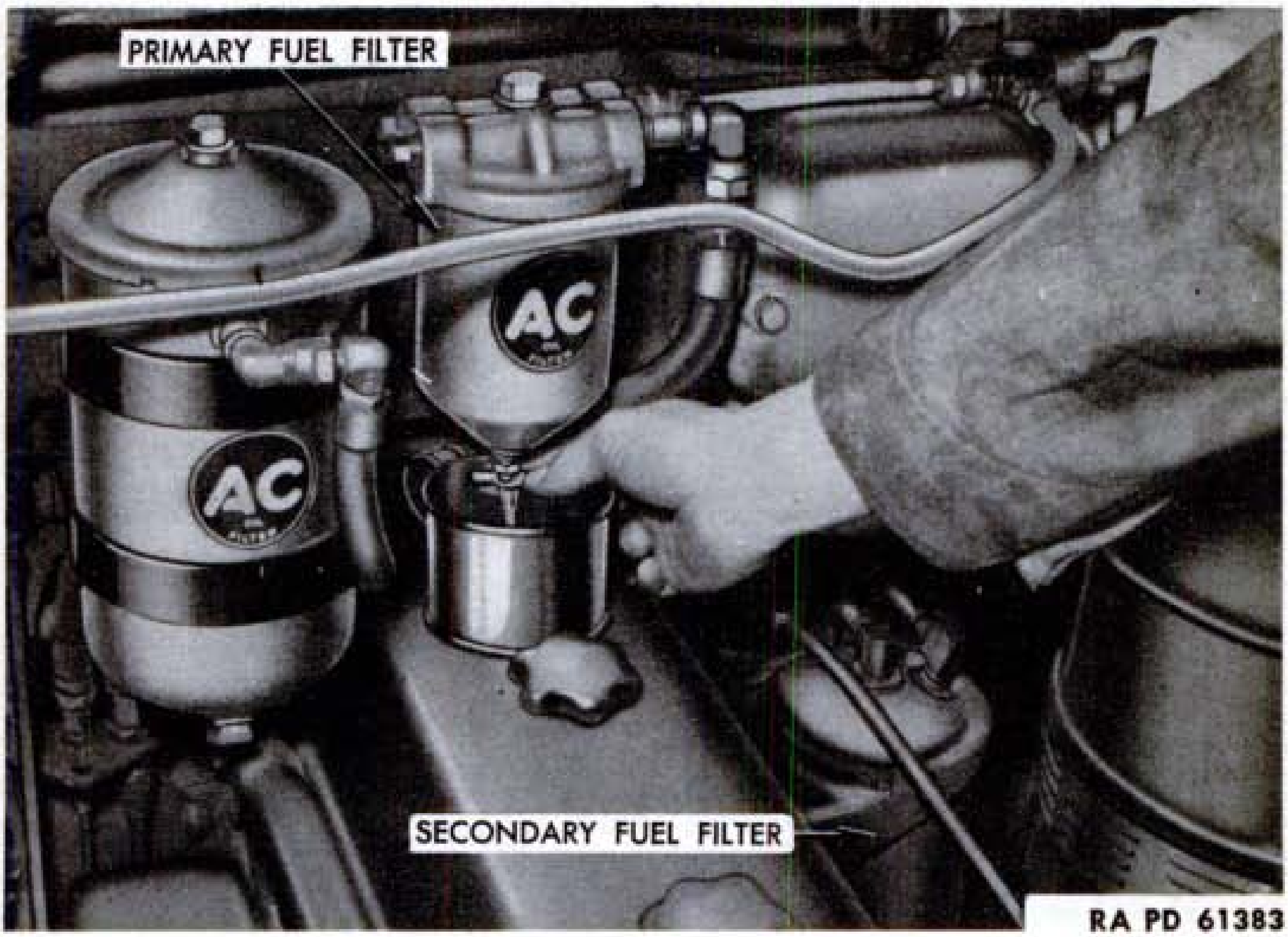

Figure 70—Draining Primary Fuel Filter

partment. Fuel is drawn from the tank through the primary filter before it reaches the fuel pump. The filter element is of the stacked disk type consisting of a large number of metal disks (0.002 inch thick) squeezed together by the spring on the filter bowl stud.

b. Service Primary Fuel Filter. Drain off water and sediment every day (fig. 70). Replace element every 500 hours or 5,000 miles or more often as required. Clean only one primary fuel filter at a time. Turn fuel tank selector valve to "OFF" position. Drain filter bowl through drain cock and take off bowl and element by removing bolt at top of filter. Wash the element carefully in fuel oil, using care not to bend the disks (fig. 71). CAUTION: *Do not scrape or use stiff brush.* Wipe out filter bowl and reassemble, using new gaskets. Loosen the fuel line that is marked "OUT", turn fuel tank selector valve to LH or RH, lock out clutch on engine being serviced and run other engine until fuel is forced out of loosened fuel line. Then tighten the connection. This fills the filter bowl and avoids air-locks in the fuel system. The same cleaning operation is performed for the other engine.

c. Removal of Primary Fuel Filter. Turn fuel tank selector valve to "OFF" position. Open drain cock and drain filter. Disconnect both inlet and outlet fuel lines. Remove attaching bolts and lock washers. Remove filter from filter panel.

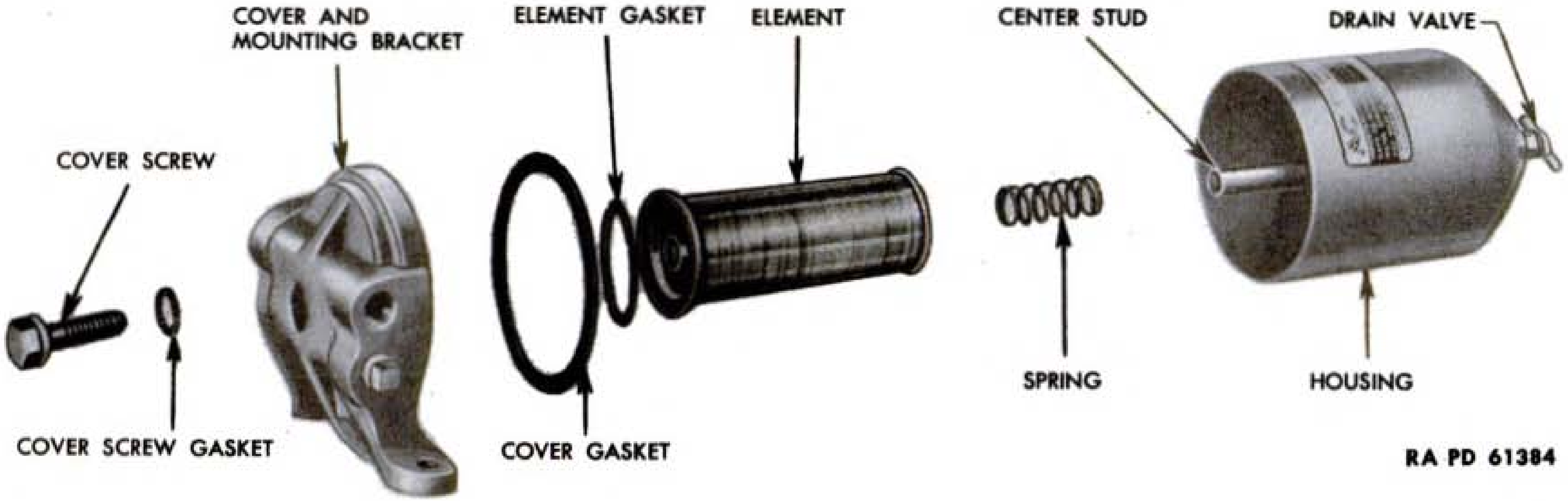

Figure 71—Primary Fuel Filter, Disassembled

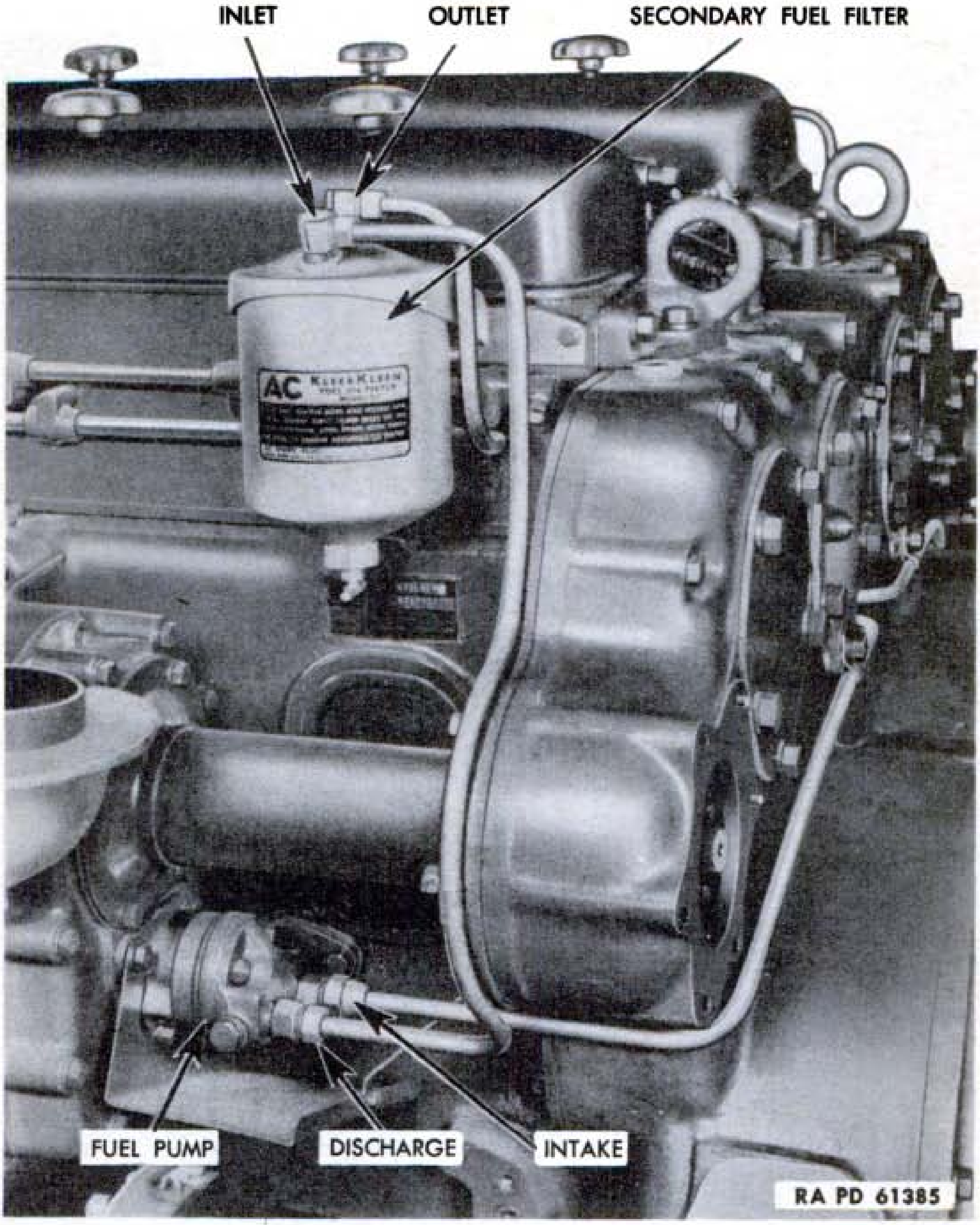

Figure 72—Fuel Pump, Secondary Fuel Filter and Fuel Lines

d. Installation of Primary Fuel Filter. Install attaching bolts and lock washers. Connect both inlet and outlet fuel lines but do not tighten outlet line. Turn tank selector valve to either LH or RH position. Lock out clutch and run other engine until fuel is forced from outlet connection. Tighten connection and stop engine.

96. SECONDARY FUEL FILTER.

a. Description. A secondary fuel filter is mounted on each engine on the outside corner of the cylinder head, at the flywheel end (fig.

72). As the fuel leaves the pump it is forced into the secondary filter bowl, through the cleaning element and then into the fuel manifold. The element, which is of the replaceable type, collects dirt and water that may have been passed by the primary filter.

b. Service Secondary Fuel Filter. Drain off water and sediment every day (par. 29, item 66). Replace element every 500 hours or 5,000 miles or more often as required. Clean only one secondary fuel filter at a time or when primary filter is being cleaned. Turn tank selector valve to "OFF" position. Open drain cock and drain bowl. Remove bowl by screwing out hexagon head stud at bottom and remove stud, bowl, gasket and element. Wipe out bowl clean with cloth soaked in Diesel fuel and close drain cock. Place new gasket over stud and insert stud through bottom of bowl. Place lock washer, new lower gasket, new element, new upper gasket and spring over stud and into bowl. Install new cover gasket and place bowl up against cover. Screw stud onto cover center bolt and tighten. Loosen filter outlet connection. Turn tank selector valve to LH or RH position. Lock out clutch and run other engine until fuel is forced from outlet connection. Tighten connection. Check for leaks and stop engine. Repeat servicing operations for secondary fuel filter on other engine.

c. Removal of Secondary Fuel Filter. Turn tank selector valve to "OFF" position. Open drain cock and drain filter bowl. Disconnect both inlet and outlet fuel lines. Remove bowl (par. 96 **b**) and remove two bolts attaching cover to cylinder head and remove filter cover.

d. Installation of Secondary Fuel Filter. Place cover on cylinder head and install attaching bolts but do not tighten. Connect both inlet and outlet fuel lines and tighten cover bolts. Install element and bowl (par. 96 **b**).

97. FUEL PUMP.

a. Description. Each engine has a positive displacement vane type fuel pump (fig. 72) mounted on the flywheel end of the blower housing and driven by the lower rotor shaft. The pump has a capacity of approximately 40 gallons per hour at 2,000 engine revolutions per minute. A spring loaded relief valve in the pump body prevents line pressure rising above 55 pounds per square inch. The pump for the left or LC engine is marked "RH IN". The pump for the right or LA engine is marked "LH IN". The relief valve within the pumps is assembled facing in opposite directions and therefore these markings must be followed when installing a pump.

b. Test Fuel Pump Pressure. Disconnect fuel pump outlet line at fuel inlet manifold. Connect fuel lines on fuel pressure gage (41-G-198-75) to outlet line and inlet manifold. Run engine at 600 to 800 revolutions per minute. Fuel pressure gage must read at least

10 pounds per square inch. Stop engine and disconnect fuel pressure gage lines and connect fuel pump outlet line to inlet manifold.

c. Test Fuel Pump Capacity. Disconnect fuel return hose, for engine to be tested, from tee connection in fuel return line to tank selector valve. Run engine at 1,200 revolutions per minute with end of hose in suitable container. Fuel pump must deliver at least ½ gallon of fuel per minute. Stop engine and connect fuel return hose to tee connection.

d. Removal of Fuel Pump. Turn fuel tank selector valve to "OFF" position. Remove air cleaners and cover inlet housing (par. 88 **b**). Remove bolt attaching support to drip shield (fig. 72). Disconnect both the inlet and outlet fuel lines at the fuel pump. Remove three bolts attaching fuel pump to blower end cover, with fuel pump wrench (41-W-495-100). Remove drip shield, fuel pump and gasket. Remove drive fork from inner end of pump shaft.

e. Inspection of Fuel Pump. Check body gaskets for leaks. With engine stopped, excessive amount of fuel dripping from bleeder hole in flange indicates leaking pump seals. Rotate the pump shaft to make sure it turns freely without bind or excessive end play. The fuel pump will not be disassembled, but will be replaced as a unit.

f. Installation of Fuel Pump. Make sure pump marked "RH IN" is installed on LC engine on left side of vehicle and one marked "LH IN" on LA engine on right side of vehicle. Both pumps will be installed with the inlet connection toward the cylinder block. Place drip shield on pump and insert two upper short bolts with lock washers. Place drive fork on square end of rotor shaft with ends of fork away from pump. Position new gasket on flange over bolts. Place pump in position on blower end cover making sure driving fork engages with lower rotor shaft. Tighten bolts fingertight. Install lower long bolt, with lock washer, and tighten all bolts with fuel pump wrench (41-W-495-100). Attach drip shield support to drip shield. Connect fuel lines to pump. Install air cleaners (par. 88 **f**). Turn fuel tank selector valve to LH or RH position. Run engine and check for leaks and tighten as required.

98. FUEL MANIFOLDS.

a. Description. The fuel manifolds are mounted on the outer side of the cylinder heads (fig. 73). Each manifold has six tees which project into the cylinder head and mate with the fuel connectors screwed into the head from the top. Fuel is distributed to each injector through the lower or inlet fuel manifold which is connected to the fuel pump. The excess fuel is carried away from the injectors by the upper or return fuel manifold connected through a hose and line to the tank selector valve and returned to the tank from which the fuel is being drawn.

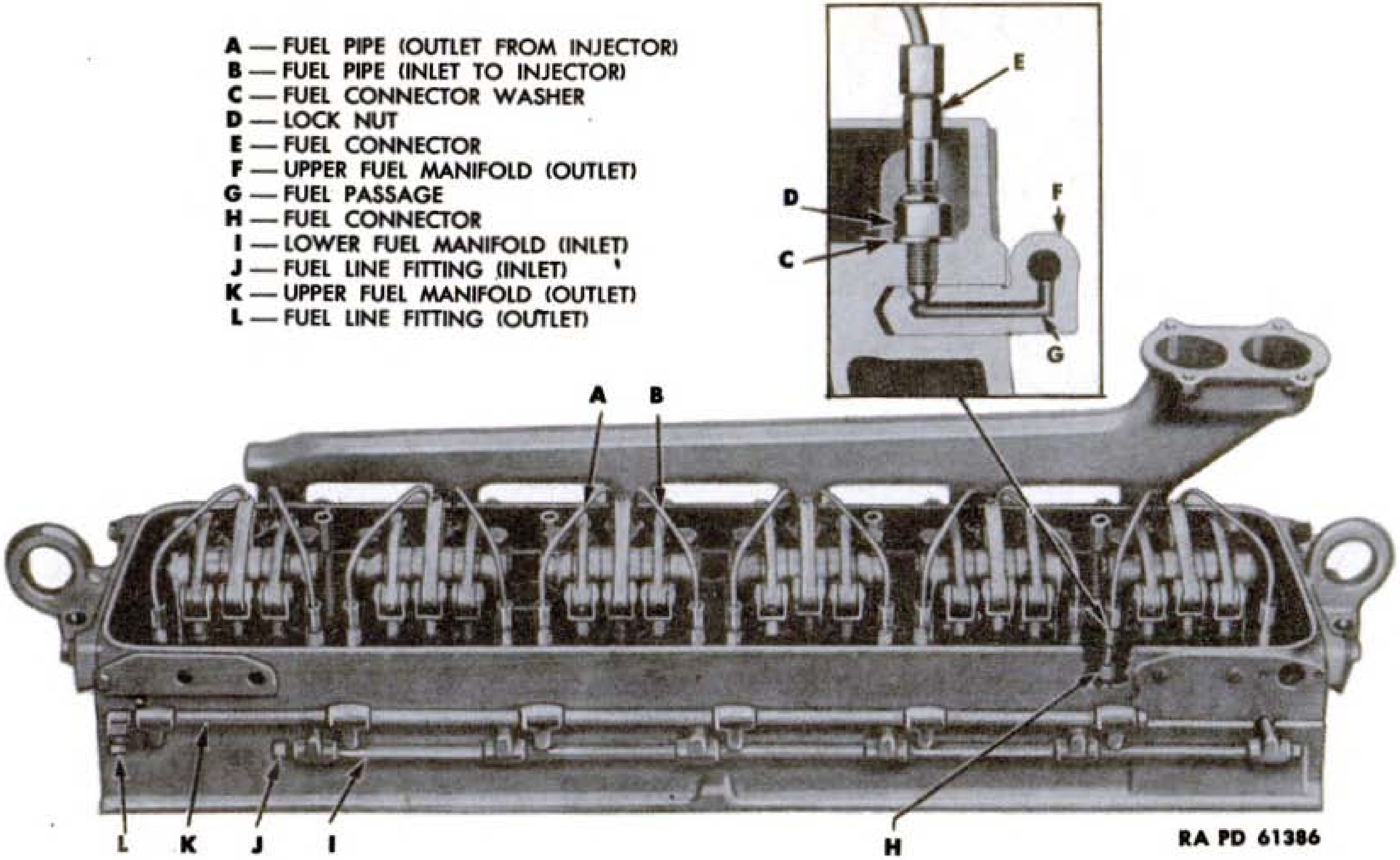

A — FUEL PIPE (OUTLET FROM INJECTOR)
B — FUEL PIPE (INLET TO INJECTOR)
C — FUEL CONNECTOR WASHER
D — LOCK NUT
E — FUEL CONNECTOR
F — UPPER FUEL MANIFOLD (OUTLET)
G — FUEL PASSAGE
H — FUEL CONNECTOR
I — LOWER FUEL MANIFOLD (INLET)
J — FUEL LINE FITTING (INLET)
K — UPPER FUEL MANIFOLD (OUTLET)
L — FUEL LINE FITTING (OUTLET)

Figure 73—Fuel Manifolds and Connectors

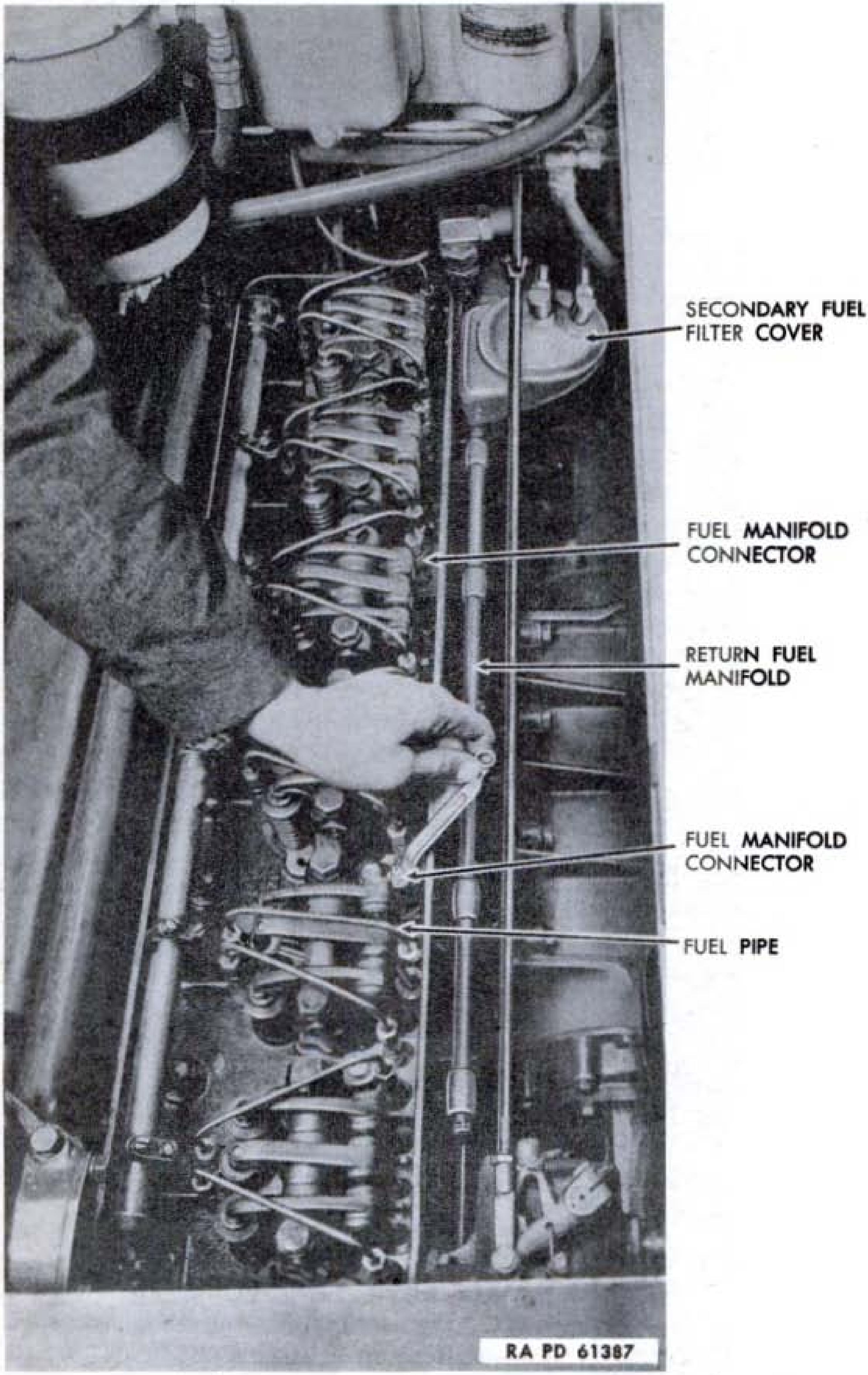

Figure 74—Fuel Pipes and Fuel Manifold Connectors

b. Removal of Fuel Manifolds. Remove air cleaners and cover inlet housing (par. 88 **b**). Remove rocker arm cover (par. 82 **b**). Disconnect fuel pump outlet line from lower or inlet manifold and fuel return hose from fuel return manifold. Disconnect injector fuel lines from fuel connectors (fig. 74). Loosen lock nuts on connectors and screw connectors out of cylinder head and discard copper washers. Carefully pull manifolds out of cylinder head.

c. Inspection of Fuel Manifolds. The tapered seats in the tees must be inspected for scored or scratched surfaces or dirt on the seat. All passages must be free of sediment. All connections must be leakproof.

d. Installation of Fuel Manifolds. Make sure seats in manifold tee connections are perfectly clean. Install the inlet manifold in the lower openings of the cylinder head with the tee connections on the top side. With lock nuts in place on connectors, install new copper washers and carefully screw connectors into cylinder head while moving manifold to seat connectors in tapered slots in tee connections. Tighten connectors evenly and then turn down lock nuts against copper washers to compress washers (fig. 74). Connect injector fuel pipes to top of manifold connectors. Install upper or return manifold with tee connections on bottom side. Use new copper washers and repeat operations to install connectors. Connect fuel pump outlet line to inlet manifold and fuel return hose to return manifold. Install air cleaners (par. 88 **f**). Turn fuel tank selector valve to LH or RH position. Start engine and check all connections for leaks and tighten as required. CAUTION: *All fuel connections on the cylinder head must be leakproof so as to prevent Diesel fuel from diluting the lubricating oil and thus damaging the engine.* Stop engine and install rocker arm cover (par. 82 **c**).

99. FUEL TANK SELECTOR VALVE.

a. Description. The fuel tank selector valve controls the fuel supply from either set of tanks (fig. 61). With valve in RH position, fuel is supplied to both engines from the set of tanks on right side of vehicle. In LH position, fuel supply is from the tanks on left side of vehicle. Return fuel from the injectors is pumped into the upper tank of the set in use.

b. Removal of Fuel Tank Selector Valve. Remove engine compartment side cover plate and door (par. 167 **c**). Remove engine compartment splash panel (par. 168 **d**). Remove two air cleaners toward flywheel end of right engine. Drain fuel from both right and left fuel tanks, if necessary, so that fuel level in both sets of tanks is less than ¾ full. Disconnect all fuel lines on fuel tank selector valve. In fighting compartment, unscrew nut and remove valve handle. Unscrew two bolts at bottom of valve plate while valve is being supported in engine compartment.

c. Installation of Fuel Tank Selector Valve. While valve is held in position in engine compartment, install two bolts from fighting compartment side and tighten. Install valve handle and tighten nut. In engine compartment attach fuel lines to valve and tighten all connections. Install the two air cleaners. Turn fuel selector valve to RH or LH. Start engines and examine fuel connections for leaks, then shift fuel tank selector valve to other set of tanks and again examine connections for leaks. Install engine splash panel (par. 168 **e**). Install engine compartment side cover plate and door (par. 167 **d**).

100. FUEL LINES.

a. Description. Flexible hoses instead of steel tubes are used where flexing is required in performing maintenance operations or where rigid tubes would be subjected to considerable vibration. Brazed steel tubing is used for the more rigid installations (fig. 39).

b. Removal and Installation of Fuel Lines. When loosening or tightening the compression fitting on the ends of the tubes or hoses, hold the nipple, elbow or bushing from turning. Use tight-fitting end wrenches to prevent rounding the corners on the connections. Protect the open fittings and ends of the disconnected lines with tape to prevent dirt entering the fuel system or lines or getting into the threads on the fittings. Avoid bending the steel lines to provide access to other units by removing the line where practical. Before installation make sure the threads and packing glands are clean and free of dirt particles. Spring the tubes or bend the hoses to start the threads squarely to avoid cross-threading. Use sufficient pressure when tightening connections to prevent leaks, but avoid overstressing the threads or connections.

c. Replacement of Fuel Lines. Replace all damaged hoses as complete prefabricated assemblies. Tape may be used to effect temporary emergency repairs but is short-lived and may soon leak and cause loss of fuel. When possible replace steel tubing with preformed tube assemblies. When necessary to make replacement from bulk lengths, first measure the developed length of the tube to be replaced. Cut the new tube of sufficient length to allow for bends. Use extreme care in bending new tubing to avoid kinking. In many cases bends can be made with a larger radius than used in forming the original tube. After the tube is fitted, dress both ends off squarely with a file Remove burs on inside and outside of tube. Place the correct compression fittings or packing glands on each end of the tube. The ends of the tube are now ready to be double-lap flared if this type of connection was originally used. The fuel line flaring tool (41-T-3140) is used to duplicate the original double-lap flare. Follow specific instructions in the lid of the tool box.

d. **To Bleed Fuel System.** If fuel filters and lines have been disconnected or removed and emptied, it may be necessary to bleed the fuel system of each engine to purge the system of air. Make sure fuel tank is full to bottom of strainer and fuel tank selector valve is turned to tank in system to be bled. Loosen fuel return hose on tee connection at fuel tank selector valve. Apply not more than 10-pounds air pressure (par. 46 **b** (2)) to upper fuel tank and bleed fuel from loosened connection until system is purged of air. Tighten that connection and repeat procedure for fuel system for other engine.

Section XVI

COOLING SYSTEMS

101. COOLING SYSTEMS.

a. Description. The twin Diesel engines are liquid cooled. Each engine is equipped with a water pump and fan and provided with a separate radiator and auxiliary water tank so that the cooling systems are completely independent (fig. 75). Engine operating temperature is controlled by thermostats which regulate the flow of water through the radiator (fig. 76). When engine temperature is low, the thermostats cut off the flow of water through the radiator and, by means of a bypass tube, the pump circulates the water through only the oil cooler, cylinder water jackets and cylinder head. Because the radiators are mounted at the rear of the vehicle, the two engine fans draw air in through the grating in engine compartment doors and from the fighting compartment and force it out through the radiators (fig. 76). The fans are provided with shrouds, attached to the radiators, which direct the air stream and increase cooling efficiency (fig. 76). The auxiliary water tanks in the engine compartment, one connected to each cooling system, provide additional water capacity and extra space for the water when it becomes heated and expands. Each cooling system is filled through the auxiliary water tank (fig. 75). Filler openings are equipped with pressure type filler caps. The cap has a spring operated valve designed to hold pressure up to approximately 12 pounds per square inch.

102. FILLING OF COOLING SYSTEMS.

a. Adding Water. On each cooling system, remove pin and raise hinged cover marked "WATER", one at each side on top deck at rear of turret (fig. 8). If engines are hot, always unscrew filler cap only ¼ turn to allow any steam in the system to escape gradually. This will prevent being scalded by steam and hot water. After pressure is released, unscrew cap further and remove. Do not take out the strainer. If water level is low and not visible in the auxiliary

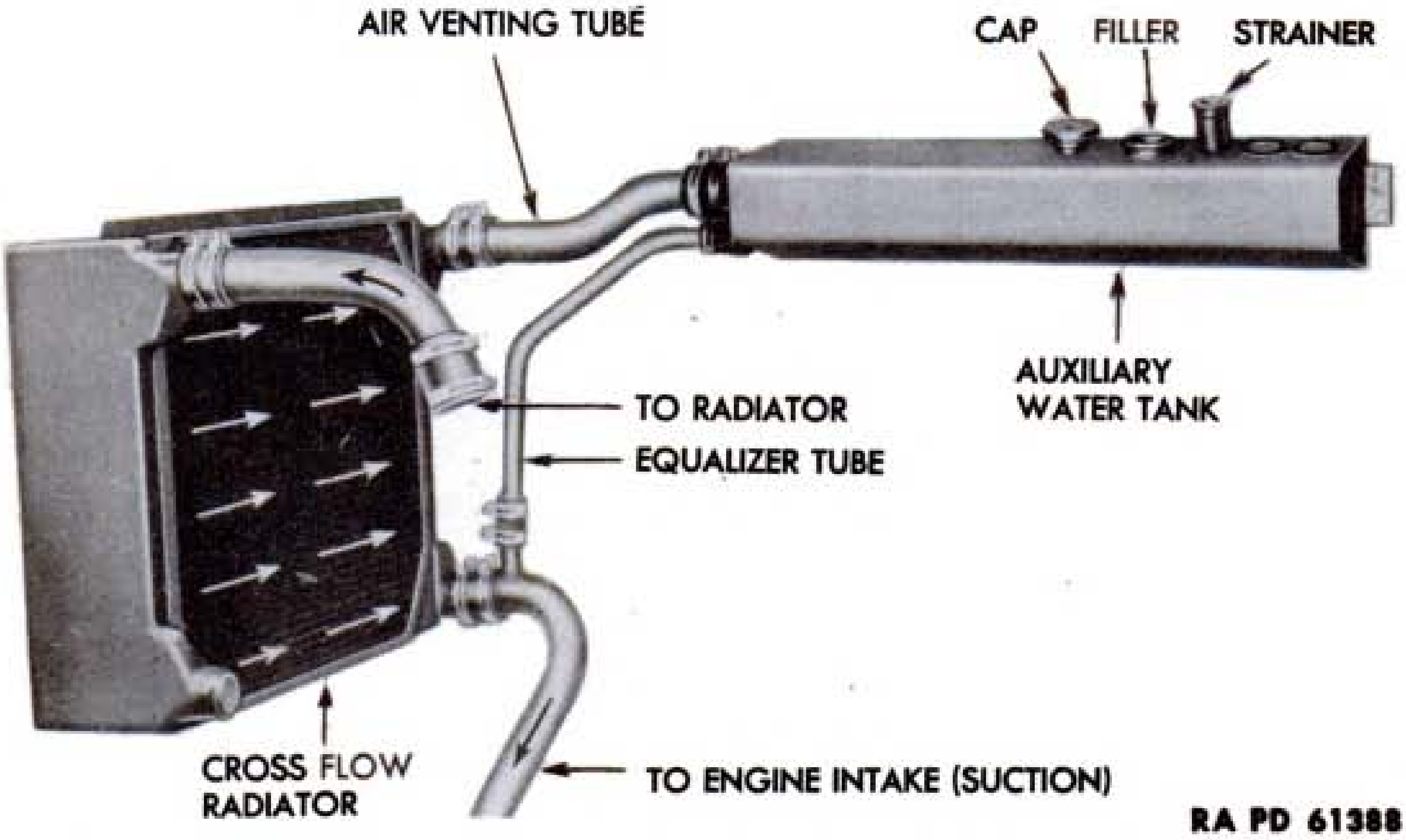

Figure 75—Showing How Auxiliary Water Tank Is Connected to Cooling System

water tank, first open air bleeder valve (fig. 76). Then fill with water, or antifreeze compound if necessary, to top of filler opening. The filler pipe extends down into the tank to provide the necessary air space for expansion. Close the air bleeder valve if it has been opened and screw filler cap on tightly, lower the cover and insert the lock pin.

103. FLUSHING COOLING SYSTEMS.

a. Drain Cooling System. Unscrew drain opening plug in engine compartment floor under each engine drain valve (fig. 140). If there is antifreeze in the cooling system, provide suitable containers. Open both filler cap covers and remove auxiliary water tank filler caps. Raise engine compartment doors (par. 167 **a**) and raise and lock splash panel. Open water drain valve on each engine and air bleeder valve on each thermostat housing (fig. 76).

b. Flush Cooling System. Drain cooling system (preceding subparagraph **b**). Next, at rear of vehicle and above exhaust deflector, remove drain plug in each lower corner of each radiator. Flush system with water until water running out of drain openings is clear. Install and tighten the four radiator drain plugs.

c. Fill Cooling System. Tightly close the water drain valve on each engine. If systems are to be filled with water, put 14 ounces of rust inhibitor in each auxiliary water tank and fill each water tank to the top with approximately 15 gallons of water. *Do not remove the strainer.* If antifreeze is to be used, read paragraph 18.

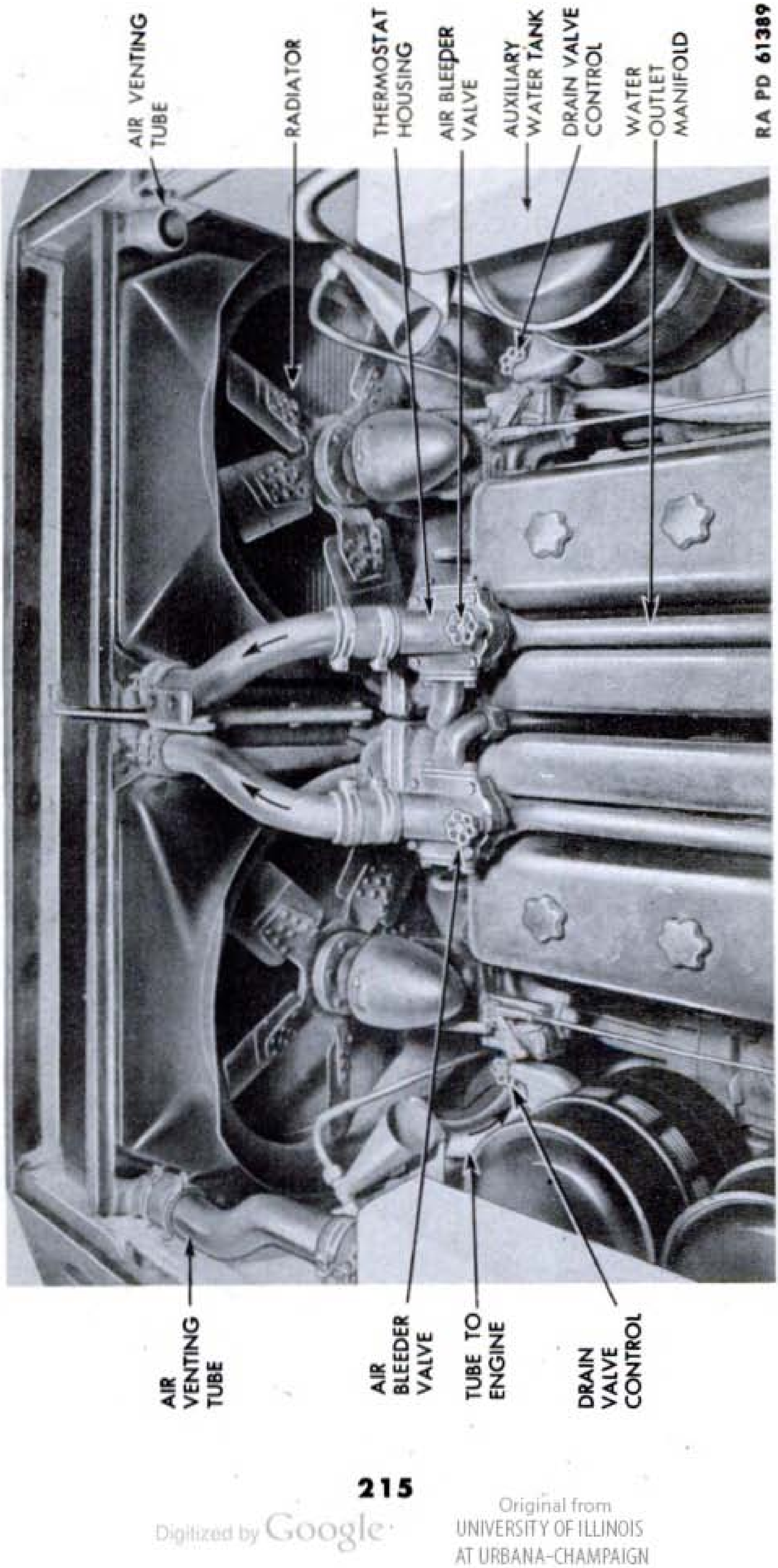

Figure 76—Cooling System—Showing Air Bleeder Valves and Drain Valves

Close air bleeder valve on each thermostat housing (fig. 76). Inspect cooling system for leaks. Lower engine compartment splash panel and hook in place. Close and bolt engine compartment doors. See that filler cap gaskets are serviceable. Put caps on and tighten. Inspect radiator drain plugs for leaks. Inspect engine drain valves for leaks, and if they are tight, screw the drain opening plugs in tightly.

104. RADIATORS AND FAN SHROUDS.

a. Description. The two radiators, mounted at the rear of engine compartment, are the cross-flow type. Water from the engine enters the top connection on the side tank closest to the other radiator, flows crosswise through the radiator and out the bottom connection in the outer side tank, entering the engine through the oil cooler (fig. 75). The top connection on radiator side tank is an air vent tube to the auxiliary water tank. A fan shroud attached to each radiator directs all the air from the fan through the radiator to increase cooling efficiency (fig. 76).

b. Removal of Radiator. Remove rear engine compartment cover plate. Remove engine compartment floor plates (par. 170 **b**). Remove exhaust deflector (par. 78 **b**). Drain cooling system (par. 100 **a**). Loosen all upper hose connection clamps on radiator, thermostat housing and auxiliary water tank (fig. 76). Remove engine to radiator tube and auxiliary water tank to radiator tube. From beneath, loosen all hose connections and remove radiator outlet tube and tube to auxiliary water tank. Attach hoisting tackle or rope sling to upper connections on radiator and support radiator so brackets can be removed. Remove two bolts on each of the four brackets which attach brackets to radiator. On outside of hull remove upper and lower radiator bracket bolts and remove the two outer brackets with insulators. Remove bolt which attaches upper radiator inner bracket to radiator center support and remove bracket. Remove bolt which attaches radiator lower inner bracket to radiator center support and remove bracket. Pull radiator slightly rearward to provide necessary clearance for bottom outlet and hoist radiator out of engine compartment. CAUTION: *Do not pry on radiator.* If it is necessary to remove fan shrouds, remove bolts on outer side and bottom of shroud. Next remove bolts which attach inner side of shroud to radiator center support. Pull shroud rearward to clear the fan and lift shroud out.

c. Installation of Radiator. If fan shroud was removed, install it by reversing the removal procedure. Inspect all radiator bracket insulators, and replace any which are not serviceable. Make sure radiator cooling surfaces are clean. Install radiator by reversing the removal procedure. Inspect all tubes, hoses and clamps, and replace if necessary. All tubes must be wiped clean. Slide hoses with clamps onto tubes until flush with end of tube. Install tubes and hose connections. Center each hose connection and turn hose clamps so that screws will be accessible. Tighten all hose clamps securely. Before installing rear cover plate, fill cooling system (par. 103 **d**) and examine all connections for leaks. Complete the assembly by reversing the remainder of the removal procedure.

105. AUXILIARY WATER TANKS.

a. Description. An auxiliary water tank in the cooling system of each engine provides additional water capacity and expansion space for the water when heated (fig. 75). The filler opening for each cooling system is on the top of the expansion tank. Any air in the radiator is vented through the large tube leading to the auxiliary water tank. Water poured into the auxiliary water tank flows out the smaller tube to the radiator outlet tube to fill the cooling system (fig. 75). The water pump does not circulate water through the auxiliary water tank.

b. Removal of Auxiliary Water Tank. Remove engine compartment cover plate and door above the tank to be removed and open the other door (par. 167 **c**). Remove engine compartment splash panel (par. 168 **d**). Drain cooling system (par. 103 **b**). Loosen two clamps on each connection at rear end of auxiliary water tank (fig. 75). Remove two bolts which attach rear of tank to sponson cover plate. Remove two similar bolts at front end of tank, supporting front end when removing last bolt, and pull tank forward off the hose connections and lift tank out.

c. Installation of Auxiliary Water Tank. Inspect hose connections and clamps, and replace if necessary. Install auxiliary water tank by reversing the removal procedure. Position hose clamps so that screws are accessible for future tightening with cover plates installed. Tighten hose connections. Close engine drain valve. Open air bleeder valve, and fill cooling system. Close air bleeder valve and inspect for leaks before installing engine compartment splash panel.

106. WATER PUMPS.

a. Description. Each engine is equipped with a centrifugal water pump which circulates water through the cylinder block, cylinder head, and radiator and oil cooler. The pump is mounted on the fan end of the blower housing directly under the governor weight housing. It is driven by a coupling on the end of blower lower rotor shaft. The pump shaft turns on a prelubricated double row ball bearing which does not require additional lubrication.

b. Removal of Water Pump. Open engine compartment doors (par. 167 **a**). Raise and lock engine compartment splash panel (par.

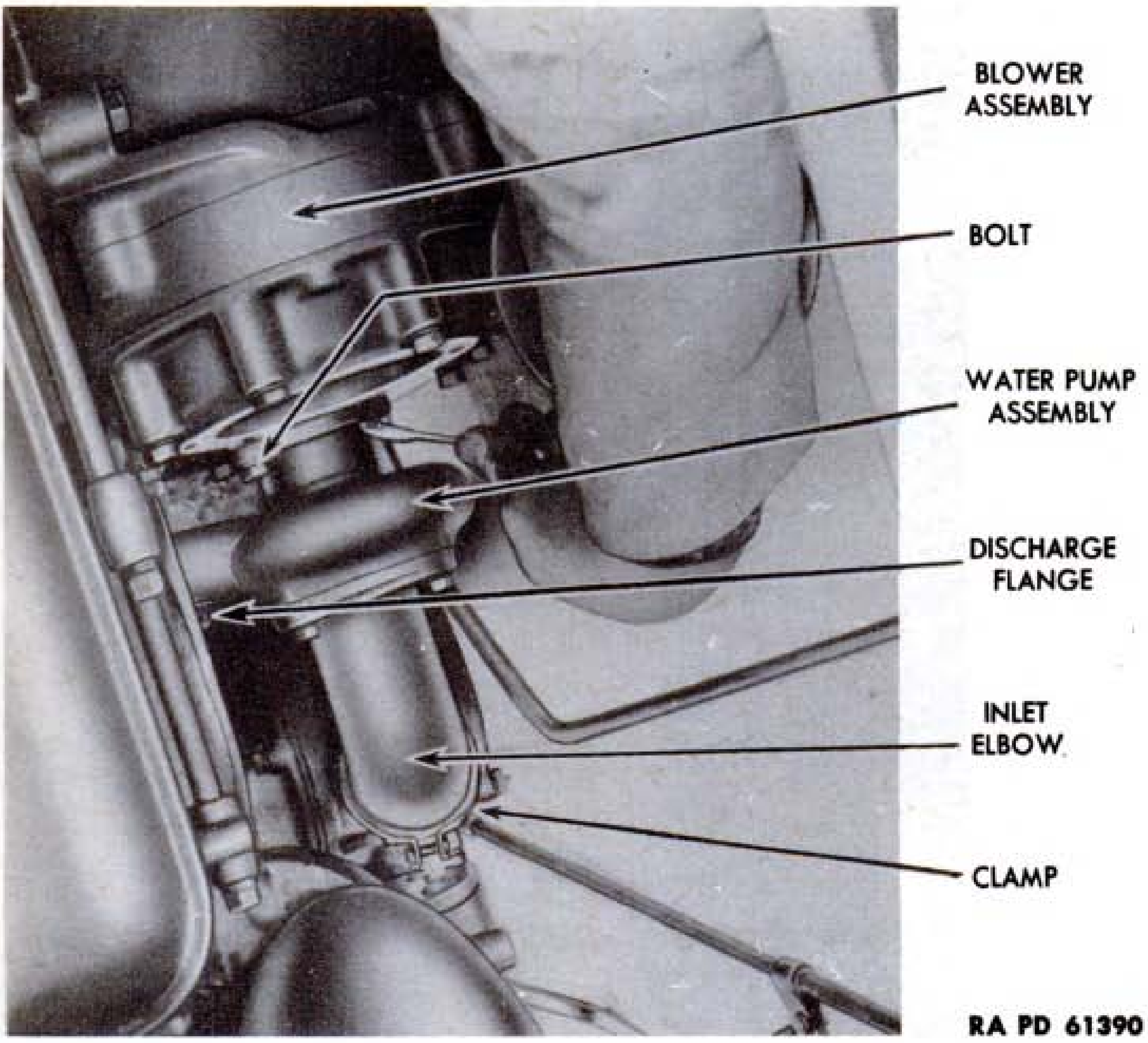

Figure 77—Removing Water Pump

168 **b**). Drain engine cooling system (par. 103 **a**). Remove the two air cleaners nearest the fan, and cover the openings in the air inlet housing. Loosen hose clamp around seal between water pump cover elbow and oil cooler and slide seal up on elbow (fig. 77). Disconnect the water pump drain tube by loosening the $\frac{7}{16}$-in. ferruled nut at elbow on water pump. Remove two bolts which attach water pump inlet packing flange to cylinder block. Using fuel pump wrench (41-W-495-100), remove three bolts which attach water pump to blower end plate cover (fig. 77). Turn the pump one-quarter turn toward the outside of the tank, then slide the pump assembly down and toward the rear, and lift it out of the vehicle. Cover the oil cooler water outlet to prevent dirt from dropping into the cooler housing. CAUTION: *When replacing new pump be sure the water bypass elbow lines up before starting the $\frac{7}{16}$-in. ferruled nut.*

c. Installation of Water Pump. Position flange on water pump outlet, and install new packing ring. Slide hose clamp and new inlet seal onto pump cover elbow. Lower the pump into place, and install by reversing the removal procedure. Tighten packing flange evenly. Position the hose clamp on water pump inlet seal so it will

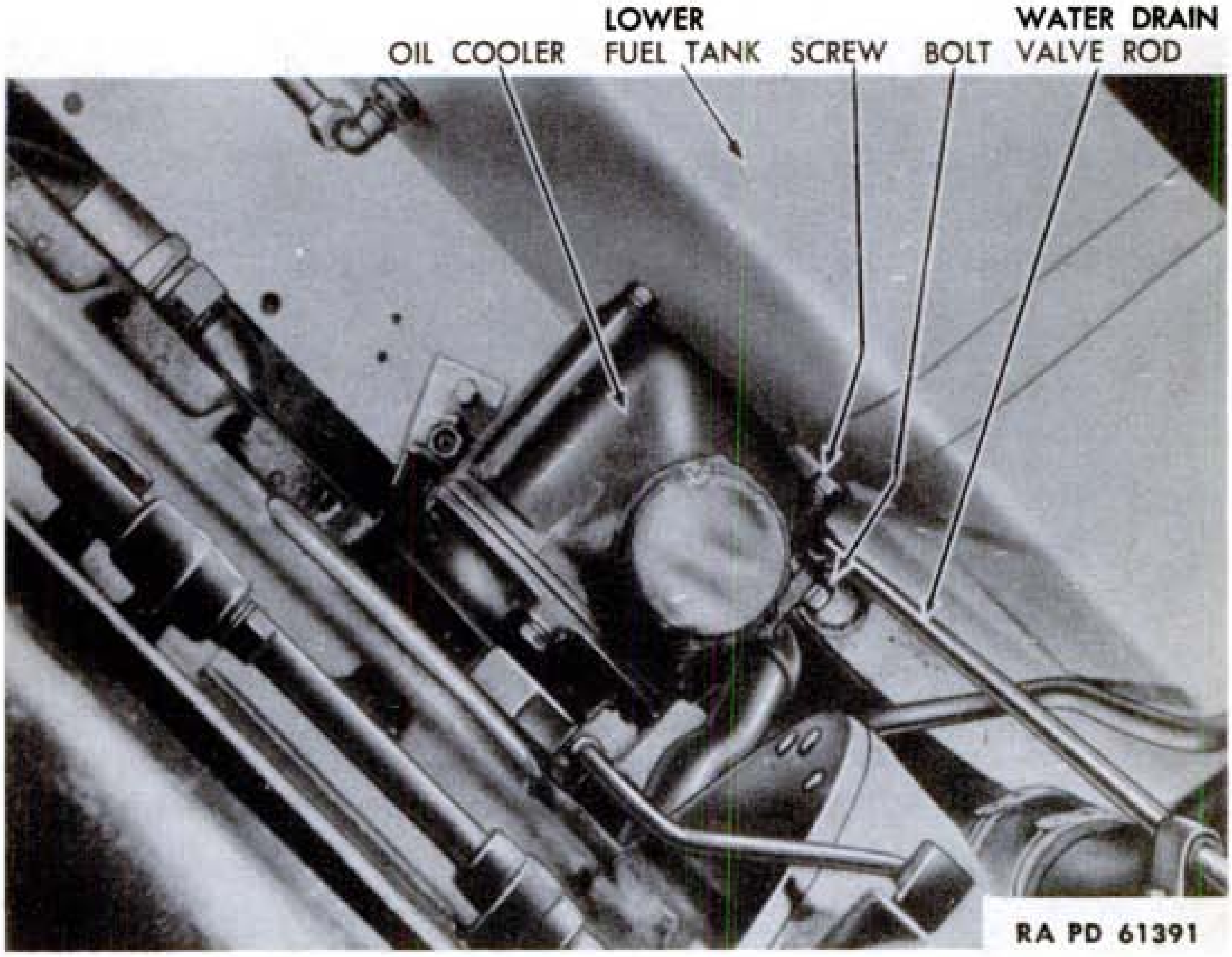

Figure 78—Side of Engine with Water Pump Removed and Oil Cooler Water Outlet Protected

be accessible for future tightening from above and tighten clamp. Fill engine cooling system (par. 103 **c**). Start engine, and inspect all cooling system connections for leaks. Lower and hook engine compartment splash panel (par. 168 **c**) and close and bolt engine compartment doors.

107. FANS.

a. Description. Each engine is equipped with a 5-blade gear driven fan to force air out through the radiator (fig. 76). The fan shaft is mounted on ball bearings with lubrication provided by the engine oiling system. The two fans turn in opposite directions indicated by an arrow on top of each balance weight cover, and are not interchangeable.

b. Removal of Fan. Open engine compartment doors (par. 167 **a**). Raise and lock engine compartment splash panel (par. 168 **b**). Remove six nuts and lock washers from fan bolts which attach fan blade assembly to drive hub. Do not remove fan bolts but withdraw just enough to clear fan and allow it to turn freely. Remove cap screw, lock washer and thick washer on end of fan shaft. Move fan assembly toward radiator and off hub, and withdraw it from fan shroud.

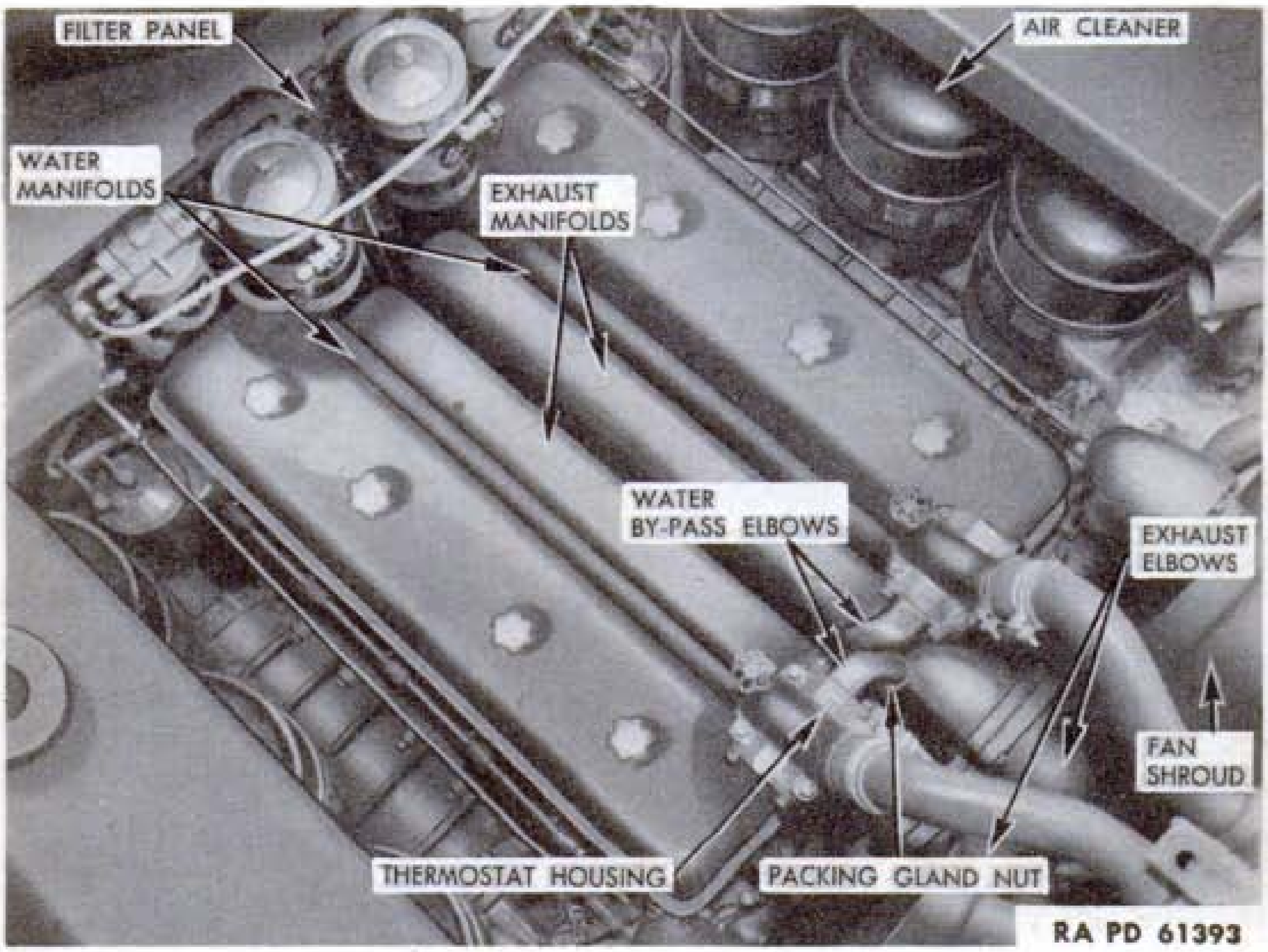

Figure 79—Top View of Engines Showing Water Manifolds and Connections

c. Installation of Fan. Wipe mounting face of fan drive hub plate clean. Hold fan above balance weight cover with hollow sides of blades facing radiator. See that the two arrows on fan blade assembly indicate the same direction of rotation as arrow on balance weight cover. When fan is assembled, it turns in the direction indicated by this arrow and the leading edges of blades must be farther from radiator than the trailing edges (fig. 76). After making sure fan is turned the right way, lower it through opening in shroud and assemble by reversing the removal procedure.

108 WATER MANIFOLDS.

a. Description. The water manifold on each engine is attached to the cylinder head, and located between the rocker arm cover and the exhaust manifold (fig. 79). Water flows into the manifold through six water openings in the cylinder head and through the manifold to the thermostat housing and then to the radiator. The water temperature gage bulb is installed in the manifold at the flywheel end.

b. Removal of Water Manifold. Open engine compartment doors (par. 167 **a**). Raise and lock engine compartment splash panel (par. 168 **a**). Remove engine compartment floor plates (par. 170 **b**).

Drain both engine cooling systems (par. 103 **b**). Remove thermostat housing and thermostats from water manifold (par. 109 **b**). Remove exhaust manifold (par. 76 **b**). Use wrench to hold water temperature gage bulb bushing from turning and unscrew bulb retainer nut. Carefully remove gage bulb to avoid damage to gage tube or bulb. Remove 12 nuts and lock washers which attach manifold to cylinder head, and lift manifold off. Remove the water manifold gaskets. If the manifold is to be replaced, unscrew the temperature gage bulb bushing.

c. Installation of Water Manifold. Clean the gasket surfaces on the cylinder head and water manifold flanges. Position six new gaskets on studs. If reducer bushing is to be installed, use non-hardening gasket cement on threads and screw bushing into water manifold without excessive pressure to avoid cracking the manifold. Insert water temperature gage bulb and tighten fitting. Position water manifold on studs and install the 12 lock washers and nuts. First draw all nuts down lightly and then, working from the center toward ends of manifolds, tighten all nuts with uniform pressure. Install exhaust manifold (par. 76 **c**). Install thermostats and housing (par. 109 **d**). Fill both engine cooling systems and inspect all connections and leaks. Complete the installation by reversing the remainder of the removal procedure.

109 THERMOSTATS.

a. Description. Two thermostats are located in the outlet end of the water manifold on each engine. The thermostat housing or cover also serves as the cylinder water outlet (fig. 79). The thermostats regulate engine temperature by controlling the circulation of water through the radiator. When engine water temperature is less than 158°F the thermostats completely block any circulation through the radiator. The water then is circulated by means of a bypass tube only through the engine and oil cooler. Thus only a small quantity of water has to be heated and the engine reaches efficient operating temperature much more quickly. After engine water temperature exceeds 158°F, the thermostats start opening and permit some water to circulate through the radiator. When water temperature reaches approximately 185°F, the thermostats are opened fully and close off circulation through the bypass tube so that all water is circulated through the radiator. In cold weather when thermostats are closed and heated water is being circulated through the oil cooler, it really acts as an oil warmer. By thus heating the oil, more positive engine lubrication is assured in cold weather. One of the reasons for using two thermostats, which are identical in each engine, is to minimize resistance to the flow of water when thermostats are fully opened.

b. Removal of Thermostats. Open engine compartment doors (par. 167 **a**). Raise and lock engine compartment splash panel (par.

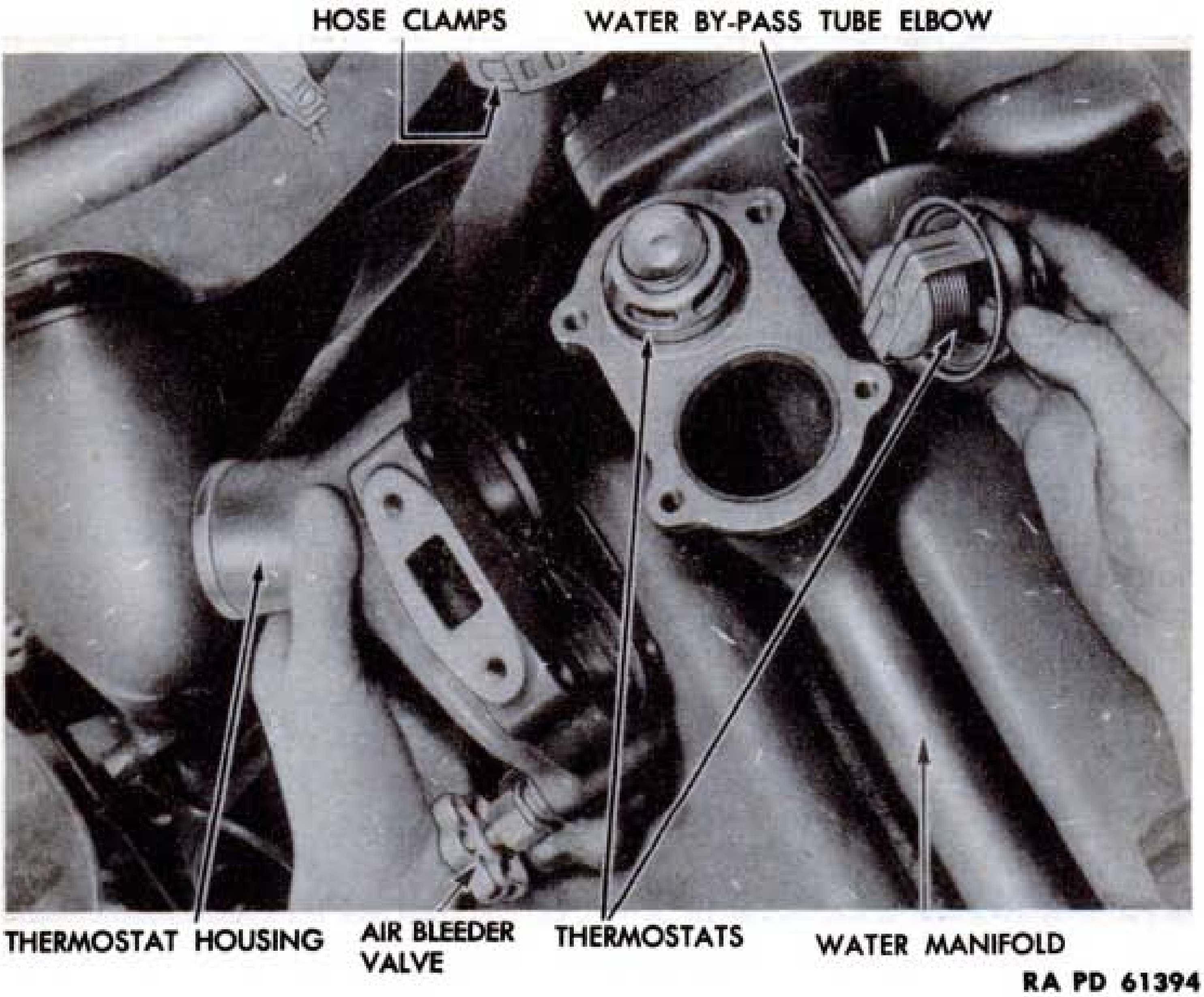

Figure 80—Showing How Thermostats Are Installed

168 **b**). Partially drain cooling system to bring water level below the thermostats. Loosen four hose clamps on engine to radiator tube. Slide engine water outlet hose up on tube, and swing lower end of tube to one side to clear the thermostat housing. Remove two bolts which attach water bypass tube elbow to thermostat housing. If elbow gasket is loose, spring elbow away from housing slightly and remove gasket. Remove four bolts and lift thermostat housing off. Lift thermostats out (fig. 80).

c. Inspection of Thermostats. After the thermostats are removed, examine the condition of the sylphons (bellows) and the valves. Unless valve is tightly closed, the thermostat must be replaced.

d. Installation of Thermostats. Clean gasket surfaces on manifold and thermostat housing. Wipe the thermostat seats in manifold clean. Place the thermostats in the manifold with the valves up (fig. 80). Use new gasket, if necessary, and install thermostat housing. Tighten bolts on opposite corners to draw housing down evenly and then tighten all bolts. Install the bypass tube elbow using a new gasket if necessary and tighten bolts evenly. Install engine to radiator tube and tighten all hose clamps. See that air bleeder valve is open, fill the cooling system, then close air bleeder valve. Inspect water connections for leaks. Lower engine compartment splash panel and hook in place. Close and bolt engine compartment doors.

110. AIR BLEEDER VALVES.

a. Description. An air bleeder valve is installed in each thermostat housing for the purpose of venting air out of the engine water jacketing when cooling system is being filled (fig. 79).

b. Removal of Air Bleeder Valve. Open engine compartment doors (par. 167 **a**). Raise and lock engine splash panel (par. 168 **b**). Partially drain cooling system until water level is below thermostat housing. Place wrench on hexagon of valve body, below the packing nut, and screw air bleeder valve assembly out of thermostat housing (fig. 80).

c. Installation of Air Bleeder Valve. First hold the valve body with a wrench and open the valve all the way by turning handwheel counterclockwise until it stops. Screw air bleeder valve into thermostat housing and tighten. Fill cooling system (par. 103 **d**). Close valve and inspect for leaks. Complete the installation by reversing the remainder of the removal procedure.

Section XVII

CLUTCHES

111 CLUTCHES.

a. Description. Each engine is equipped with a separate clutch which is operated to disconnect or connect the engine to the driving mechanism. The clutch pedal operates both clutches at the same time. With the clutch pedal held down, either or both clutches can be locked out of engagement individually by pulling out the corresponding clutch lockout button on the throttle bracket. Thus each engine can be disconnected from the other and from the driving mechanism. The clutches are single plate, dry disk type with diaphragm presssure spring.

112 CLUTCH PEDAL AND LINKAGE.

a. Description. The clutch pedal is connected by a rod to the clutch idler lever shaft (cross-shaft) under the driver's seat. The clutch control rod attaches to a lever near the other end of the clutch equalizer, which is assembled on the two clutch control idler levers (fig. 81). These levers are mounted in a clutch control bracket bolted to the hull floor, forward of the rear universal joint. The two idler levers are connected to the clutch release levers at the bottom of the two clutch housings by two turnbuckles.

b. Disconnection of Clutch Control Linkage. Back off jam nuts (left-hand thread) at front ends of turnbuckles (fig. 85). Remove cotter pins and clevis pins which attach turnbuckle yokes to lower ends of clutch idler shaft levers. Remove locknut from idler lever shaft bolt and take out the bolt (fig. 85). Raise idler levers and equalizer assembly enough to permit lower ends of idler levers to swing forward, and unscrew turnbuckles from yokes on clutch release levers (fig. 83).

113. CLUTCH LOCKOUTS.

a. Description. The two clutch lockout buttons (fig. 17) on the throttle bracket, used to lock the two clutches out of engagement, are connected by cables to the lockout shaft levers mounted in the

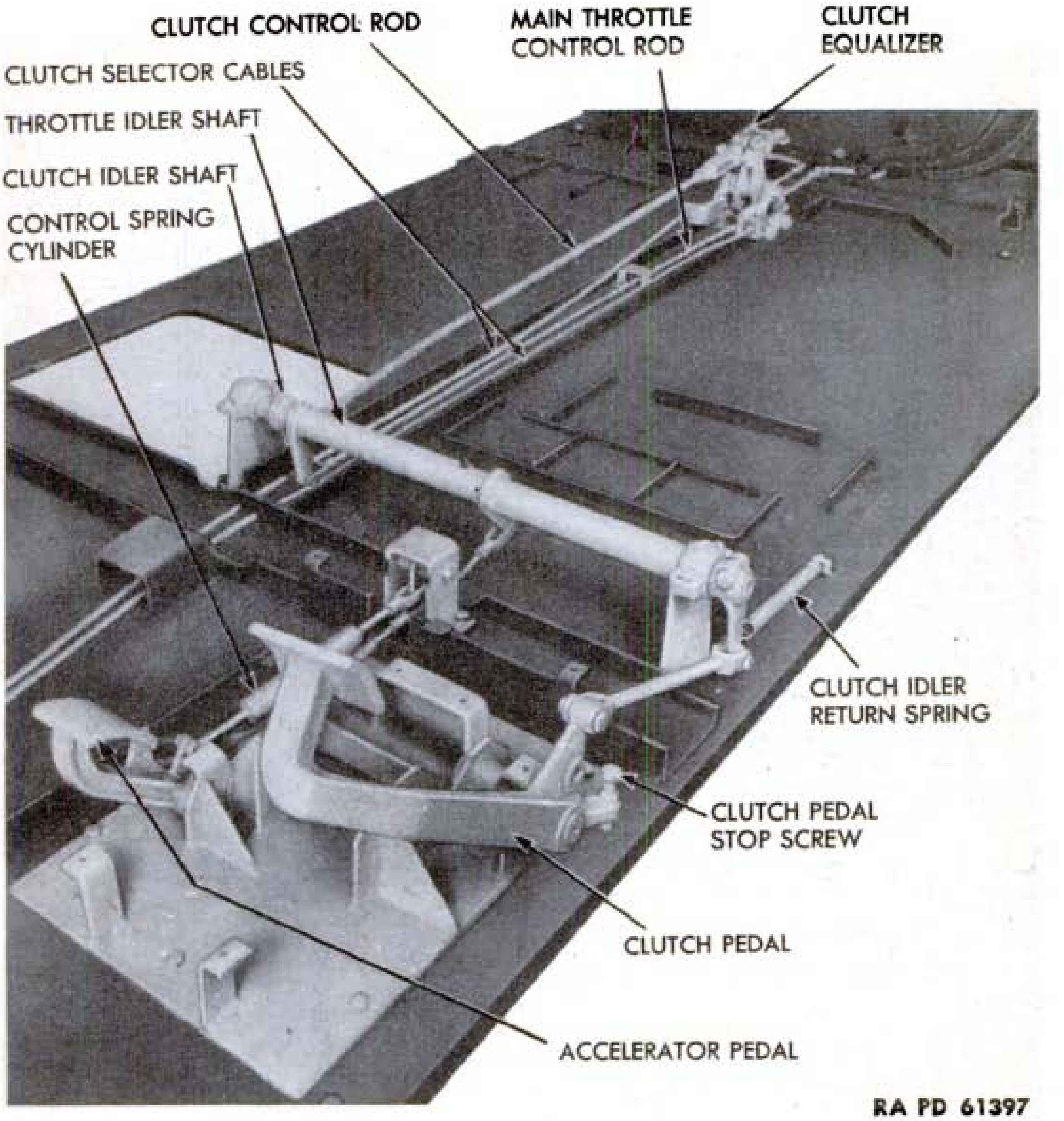

Figure 81—Clutch Pedal and Linkage

clutch control bracket. When lockout buttons are pushed in, the flats on the lockout shafts (fig. 82) are in horizontal position so there is no interference with the travel of the clutch idler levers. When the clutch pedal is pushed down, the lower ends of idler levers move rearward. Pulling out the lockout buttons rotates the lockout shafts into position so they block the return of the idler levers and hold clutches in the disengaged position (fig. 82). CAUTION: *Hold clutch pedal all the way down when operating clutch lockouts.*

b. Adjustment of Wire Type Control Cable. Raise hinged door over rear universal joint. Remove four bolts and lock washers which attach rear universal joint cover and lift cover out. See that cable housing is clamped tightly to side of clutch control bracket (fig. 82). With swivel block clamping screw loose and lockout button pushed

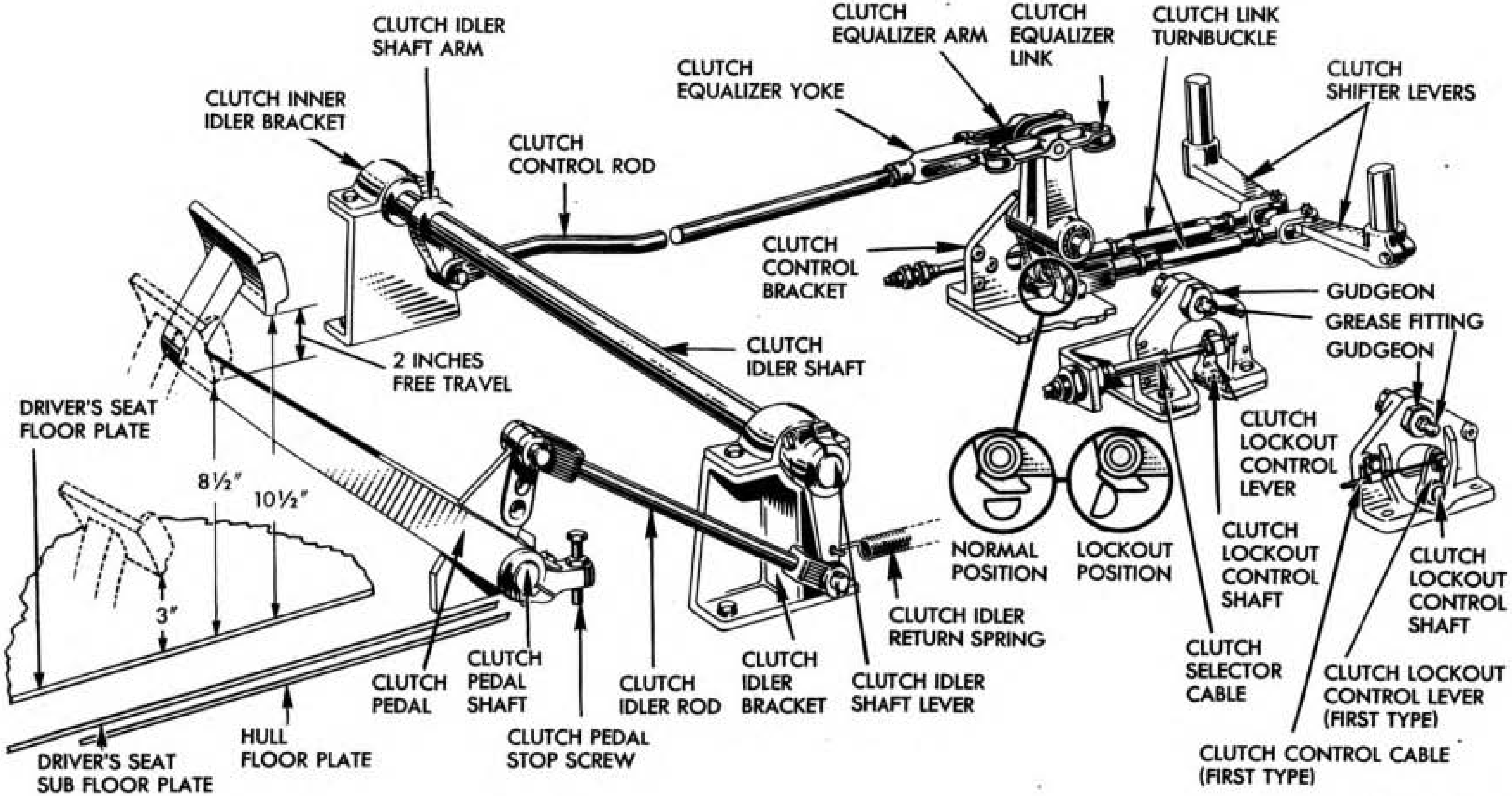

RA PD 61398

Figure 82—Clutch Linkage Diagram

all the way in, set lockout lever so that flat on lockout shaft is in horizontal position (fig. 82) and tighten the clamping screw while holding swivel block with pliers. NOTE: *When clutch pedal is held down, the flats on lockout shafts are visible through openings in sides of bracket casting.* Bolt rear universal joint cover in position and lower hinged door.

c. **Adjustment of Rod-end Type Control Cable.** For access to clutch control bracket, see preceding subparagraph **b**. Lockout cable rod-end nuts on both sides of lockout lever swivel block must be tight and lockout button pushed in all the way. Adjust cable housing end-fitting jam nuts on each side of cable housing bracket (fig. 83) to position each lockout shaft lever so that flat on shaft is in horizontal position (fig. 82). Tighten jam nuts. Limited additional adjustment, if necessary, can be made by adjusting lockout cable rod-end nuts at swivel block (fig. 85). When clutch pedal is held down, the flats on lockout shafts are visible through openings in sides of bracket casting. Bolt rear universal joint cover in position and lower hinged door.

d. **Removal of Wire Type Control Cable.** Raise door above rear universal joint. Take out four bolts, and remove rear universal joint cover. Loosen swivel block clamping screw and remove screw holding cable housing to clutch control bracket (fig. 82). Remove front universal joint cover, propeller shaft housing center cover, and rear cover (par. 123 **a**). Loosen cable clips on throttle rod guide plate bracket. Remove screws holding clips to left steering brake cover plate on differential housing. Remove cable clip on back of throttle bracket. Unscrew nut on cable housing at rear of throttle bracket and withdraw control cable assembly from throttle bracket.

e. **Installation of Wire Type Control Cable.** Remove nut and lock washer on lockout button end. After inserting control cable through hole in throttle bracket, thread cable through lock washer and nut which attaches it to throttle bracket. Tighten nut. Place cable in position on hull floor. Thread operating wire through hole in lockout shaft lever swivel block (fig. 82). Attach cable housing clamp to side of control bracket. Install and tighten all other cable clamps and clips and from this point reverse the removal procedure in preceding subparagraph **d**. Adjust control cable (see preceding subparagraph **b**). Install propeller shaft housing center cover, rear cover, and the front and rear universal joint covers. Lower the hinged door.

f. **Removal of Rod-end Type Control Cable.** For access to clutch control bracket refer to preceding subparagraph **d**. Remove nut and lock washer on lockout rod end at rear of swivel block. Unscrew and remove lockout cable housing end fitting nut and lock washer on rear side of cable housing support bracket (fig. 85). Pull cable housing and rod end out of swivel block and the support bracket. From this point the removal procedure is the same as outlined in preceding subparagraph **d.**

g. Installation of Rod-end Type Control Cable. Remove three large nuts and lock washers from cable. After inserting control cable through hole in throttle bracket, thread cable through lock washer and nut which attaches it to throttle bracket. Tighten nut. Place cable in position on hull floor. With one large nut and lock washer on cable housing end fitting, insert cable housing through hole in cable housing support bracket on clutch control bracket (fig. 85). Place second large lock washer and nut on rear side of cable housing end fitting. Screw one small nut with lock washer on cable rod end and insert rod end in swivel block. Screw other small nut with lock washer on rod end and tighten both nuts. Adjust control cable. (See preceding subparagraph **c**). Install propeller short housing center cover and rear cover, also the front and rear universal joint covers. Lower the hinged door.

114. CLUTCH PEDAL FREE TRAVEL.

a. Description. Clutch pedal free travel is the distance the clutch pedal can be pushed down before any resistance of the clutch pressure plate springs is felt (fig. 82). The amount of travel gradually decreases as the clutch disk facings wear. Whenever free travel, measured at top of pedal pad and along the path of its travel, is reduced to one inch, the two turnbuckles in the clutch linkage must be readjusted.

b. Adjustment of Clutch Pedal Free Travel. Both the pedal free travel adjustment and equalizer adjustment are made by adjusting the clutch linkage turnbuckles. Procedure for making both adjustments is combined in paragraph 116.

115. CLUTCH EQUALIZER.

a. Description. The clutch equalizer is a mechanical device which links the long clutch control rod to the two clutch control idler levers (fig. 83). Its purpose is to compensate for variation in the amount of wear on the friction facings in the two clutches so that both clutches will continue to engage at the same time.

b. Adjustment. Both the equalizer adjustment and the clutch pedal free travel adjustment are made by adjusting the clutch linkage turnbuckles (fig. 85). Procedure for making these adjustments is contained in the following paragraph.

116. ADJUSTMENT OF CLUTCH PEDAL FREE TRAVEL AND EQUALIZER.

a. Check Pedal Height in Released Position. With the pedal in released or fully up position, the correct vertical dimension from driver's seat floor plate to lower edge of pedal pad is 10½ inches (fig. 82). If necessary, adjust the released position of clutch pedal by the stop screw on lower end of pedal (fig. 82). Loosen jam nut, turn screw as required, then tighten jam nut.

b. Check Pedal Height in Depressed Position. With the pedal in depressed or fully down position, the correct vertical dimension from driver's seat floor plate to lower edge of pedal pad is 3 inches (fig. 82). CAUTION: *If pedal cannot be depressed to this 3-inch*

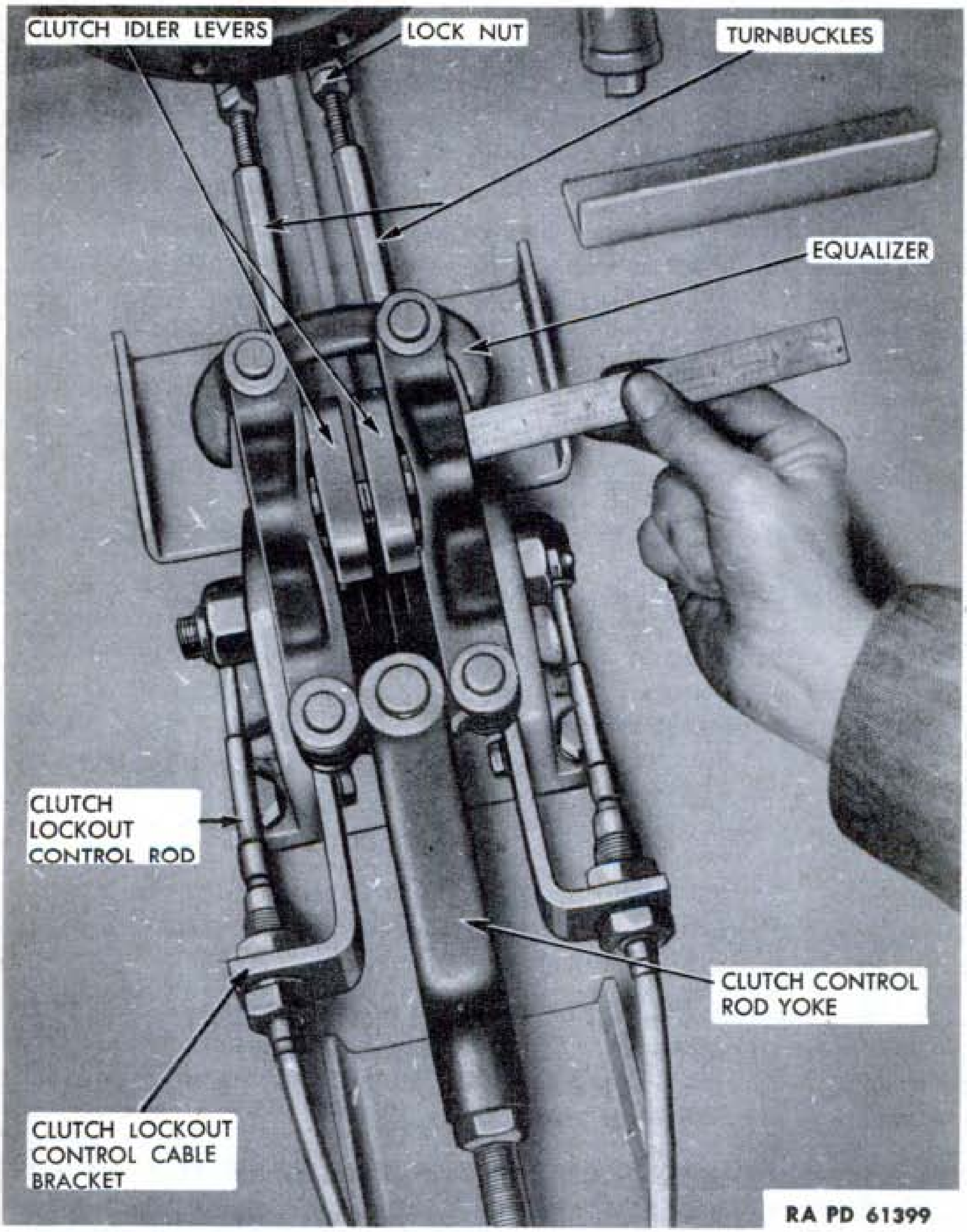

Figure 83—Checking Equalizer Adjustment

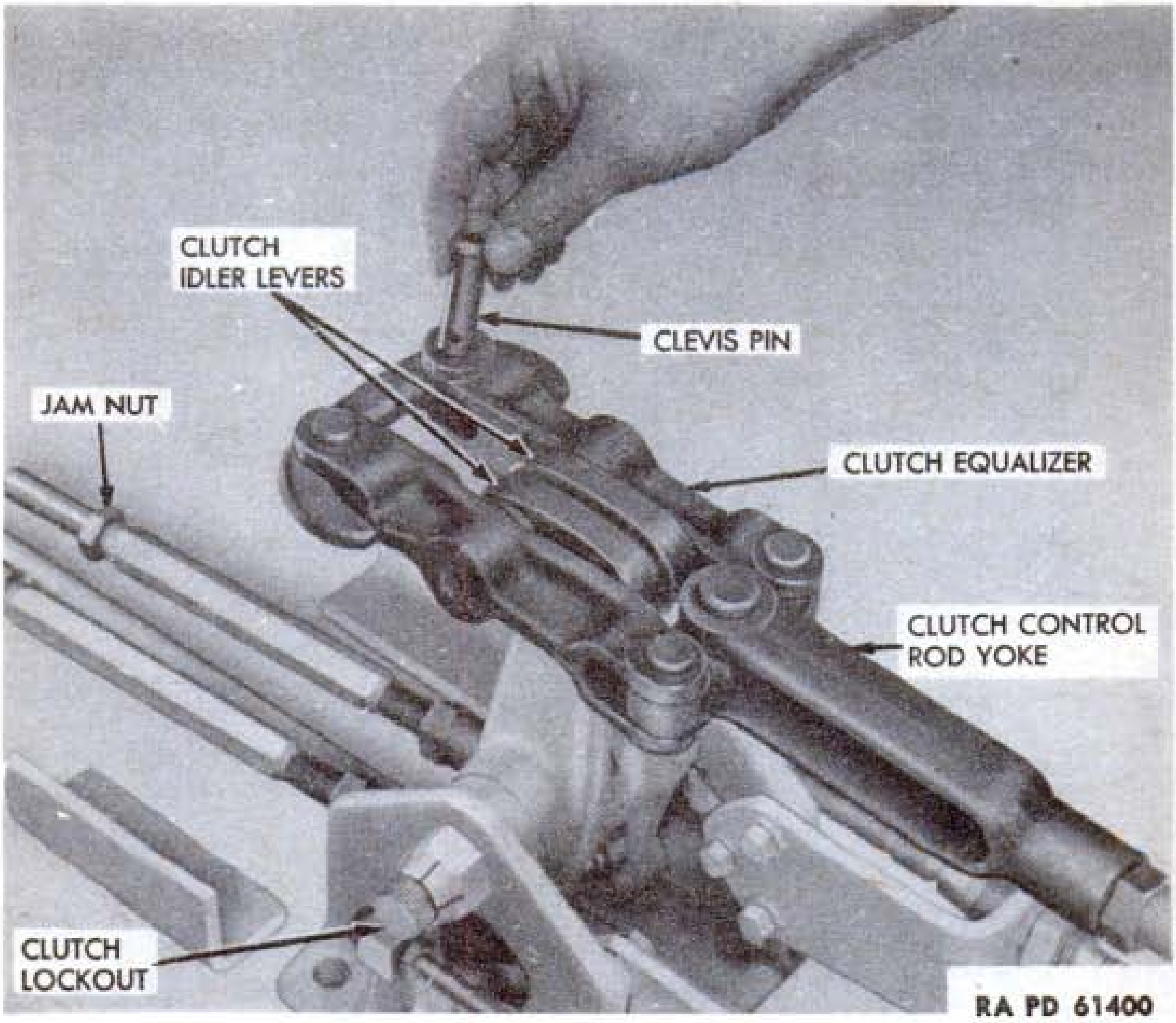

Figure 84—Removing Equalizer from Idler Levers

dimension because it strikes the protruding end of a volute suspension bracket bolt directly under the pedal, replace this bolt with a shorter one.

c. **Adjust Equalizer.** Raise hinged door over rear universal joint. Remove four bolts and lock washers which attach rear universal joint cover, and lift cover out. Loosen jam nuts on both ends of both turnbuckles (fig. 85). NOTE: *Jam nuts on front ends of turnbuckles have left-hand threads.* Turn left turnbuckle to shorten it only enough so that left clutch lockout button can be pulled out easily without holding clutch pedal down. To obtain two inches free travel, lengthen the turnbuckle, by turning in opposite direction, exactly 18 flats (six flats on hexagon turnbuckle is one full turn, 18 flats is three full turns). Hold turnbuckle with wrench to prevent it from turning, and tighten jam nuts on both ends. Hold clutch pedal all the way down, push left clutch lockout button in and let clutch pedal up. Next, while the clutch pedal is being held down 3 to 4 inches to take slack out of clutch linkage, adjust right turnbuckle so that clearance between hooked ends of equalizer rear link and side link is the same on both sides of equalizer. Clearance can be measured by a feeler gage or a six-inch scale (fig. 83). Hold turnbuckle with wrench to

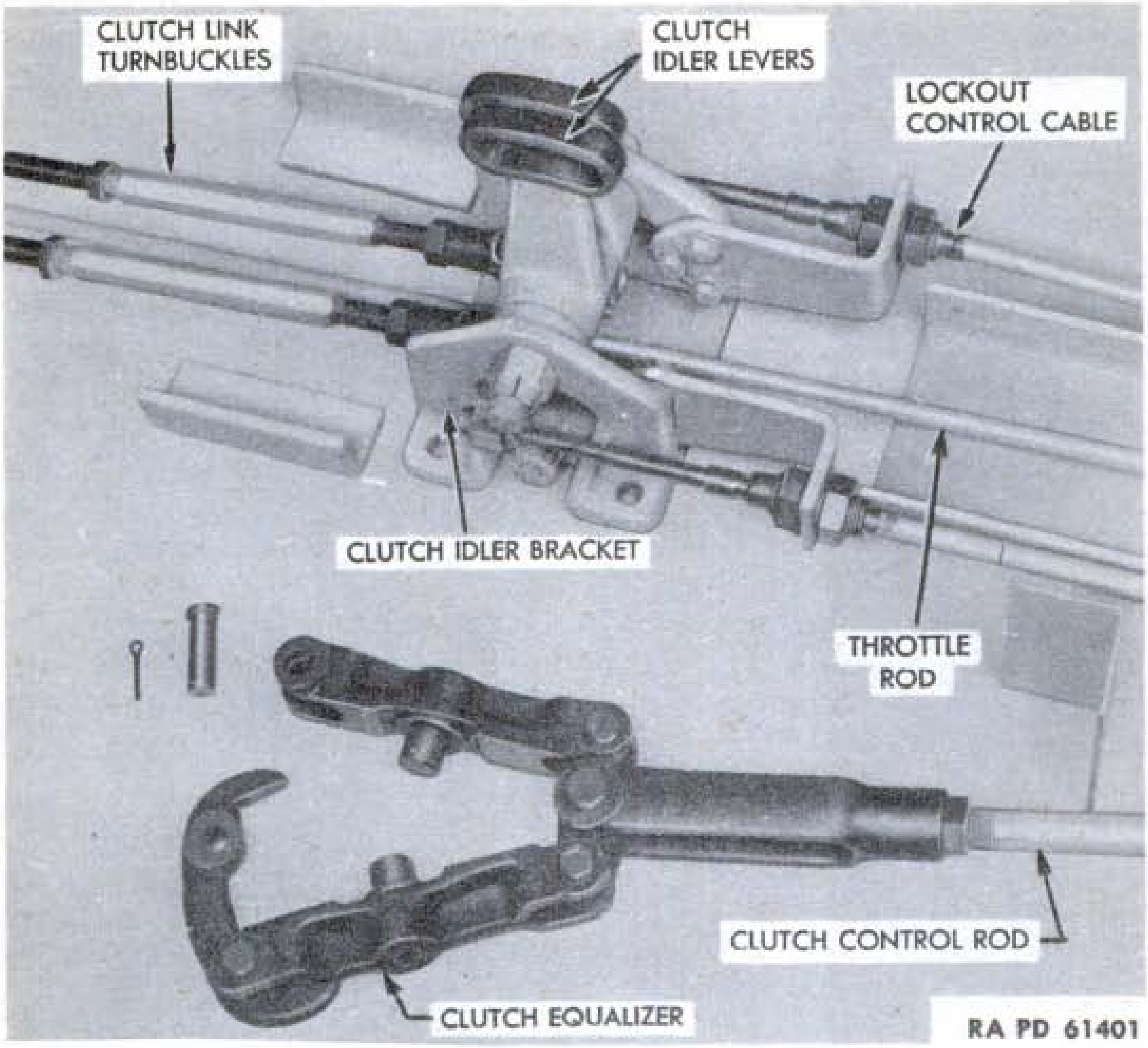

Figure 85—Equalizer Removed from Idler Levers

prevent it from turning and tighten jam nuts on both ends (fig. 85). Hold clutch pedal all the way down, pull out both lockout buttons and let clutch pedal up. See that gearshift lever is in neutral. Turn propeller shaft by hand and if it does not turn freely, loosen jam nuts on each turnbuckle, lengthen each turnbuckle exactly two flats and tighten jam nuts. Propeller shaft must turn freely by hand.

d. Adjustment of Clutch Control Rod. Unless the factory adjustment of the clutch rod attached to the equalizer was changed, or the rod replaced, no adjustment is required except after long service to correct for any wear. When this rod is correctly adjusted, there will be ⅝-inch clearance between the equalizer side link pins and the rear of the slots in the idler levers with clutch pedal in released position and clutch lockouts in. If the clutch control rod is correctly adjusted, proceed with the test for equalization of clutch engagement (par. 117). If adjustment is necessary, the procedure is as follows: Remove propeller shaft housing rear cover. Loosen control rod yoke jam nut (fig. 84). Remove cotter pin and clevis pin which attach left end of equalizer rear link to left side link (fig. 84). Spread equalizer side links so equalizer can be disconnected from idler levers. Hold front end of equalizer down, to provide clearance to remove yoke pin which attaches control rod yoke to equalizer front link, and remove pin. Assemble equalizer temporarily on idler levers and replace clevis pin previously removed but do not insert cotter pin (fig. 84). Pull equalizer rearward until pins on equalizer side links are at rear of slots in idler levers. With equalizer held in normal position, adjust control rod yoke so that rear of pin hole in yoke is even with front of pin hole in equalizer front link. Remove equalizer assembly so that control rod yoke pin can be installed. Install yoke pin so head of pin is at top, insert and spread cotter pin. Reassemble equalizer on idler levers, install clevis pin in equalizer side and end links with head of pin at top, insert and spread cotter pin. Tighten control rod yoke jam nut (fig. 83). Install propeller shaft rear cover.

e. Test Operation of Clutch Lockouts. Hold clutch pedal all the way down, pull out both lockout buttons and let clutch pedal up. Push clutch pedal down until resistance of clutch pressure plate springs is felt. See that clutch pedal has at least one inch of additional downward travel beyond this point. This is necessary to insure sufficient clearance between lockout shafts and idler levers so that lockout control cables will not be subjected to excessive strain when lockout buttons are being pulled out. If clutch pedal does not have this additional downward travel of one inch, the clutch control rod must be adjusted. See preceding subparagraph 116 **d.** Next make test for equalization of clutch engagement outlined in the following paragraph.

117. TEST FOR EQUALIZATION OF CLUTCH ENGAGEMENT.

a. General. Before making this test, it is necessary to check the tachometers for accuracy and to see that engine speeds are synchronized.

b. Test Tachometers. Start engines and operate at 1,000 to 1,200 revolutions per minute, until engine temperature gages read 150°F. See that clutch lockout buttons are in, and propeller shaft is turning. Compare the two tachometer readings. If they vary more than 100 revolutions per minute, one tachometer or the other is out of calibration and must be replaced.

c. Test Throttle Synchronization. With both clutch lockout buttons pulled out, run engines at 1,500 to 1,800 revolutions per minute. Compare tachometer readings and if they vary more than 100 revolutions per minute, synchronize the throttles (par. 73) before proceeding to test clutches.

d. Test for Equalized Engagement of Clutches. Start the vehicle on level ground in third gear several times, engaging the clutches

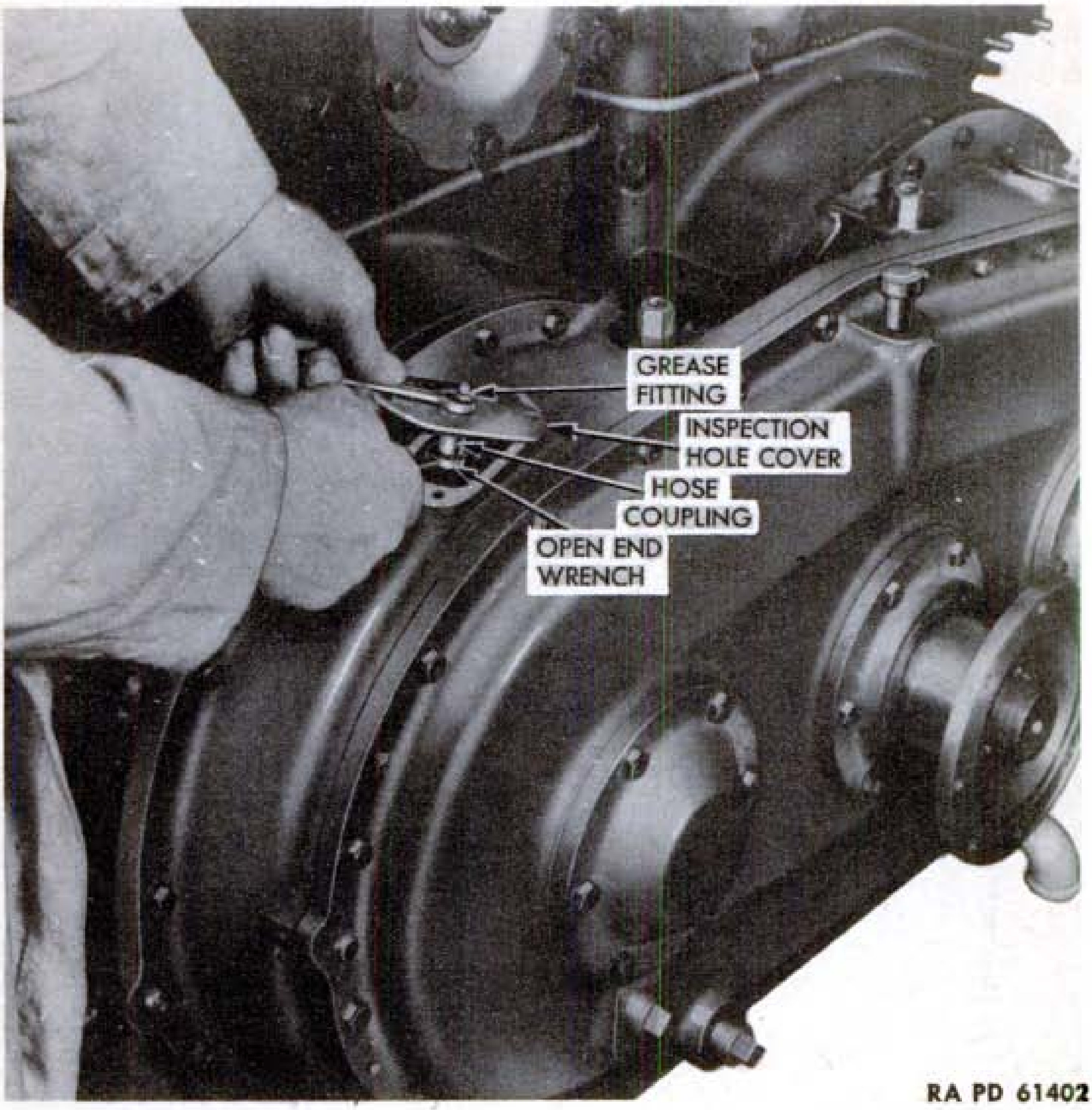

Figure 86—Removing Clutch Release Bearing Lubrication Fitting

in the regular manner, and watch both tachometers while the clutches are engaging. If clutch linkage is adjusted correctly, both tachometer hands will drop together. If one tachometer hand consistently drops more quickly than the other, inspect the entire clutch linkage, including the equalizer, to make sure it moves freely and that there is no binding in any of the clevises. If the linkage is free, recheck the equalizer adjustment (fig. 83). After rechecking the adjustment, if appreciable variation in the engaging action of the clutches still exists, refer to Clutch Trouble Shooting (par. 47). When clutch linkage has been correctly adjusted, install the rear universal joint cover and lower the hinged door.

Section XVIII

TRANSFER GEAR UNIT

118. DESCRIPTION.

a. The two engines are connected by three helical gears in the transfer gear unit where power from both engines is transferred to a single shaft which is directly connected to the propeller shaft (fig. 51). Two drive gears, one mounted on each engine drive shaft (clutch shaft), drive the center or driven gear which is mounted on the engine driven shaft (fig. 87).There are 85 teeth on each drive gear, and 62 teeth on the driven gear. With this step-up ratio the propeller shaft rotates at 1.37 times engine speed.

119. LUBRICATION.

a. Description. The transfer gear case, when filled to the top of the filler elbow on left side of case holds 2½ quarts of oil. The gears run in a bath of oil and the bearings are lubricated by splash.

b. To Check Oil Level in Transfer Gear Unit. Raise hinged door over rear universal joint. Examine transfer gear case for oil leaks. Remove plug in filler elbow (fig. 88). Add oil as necessary to

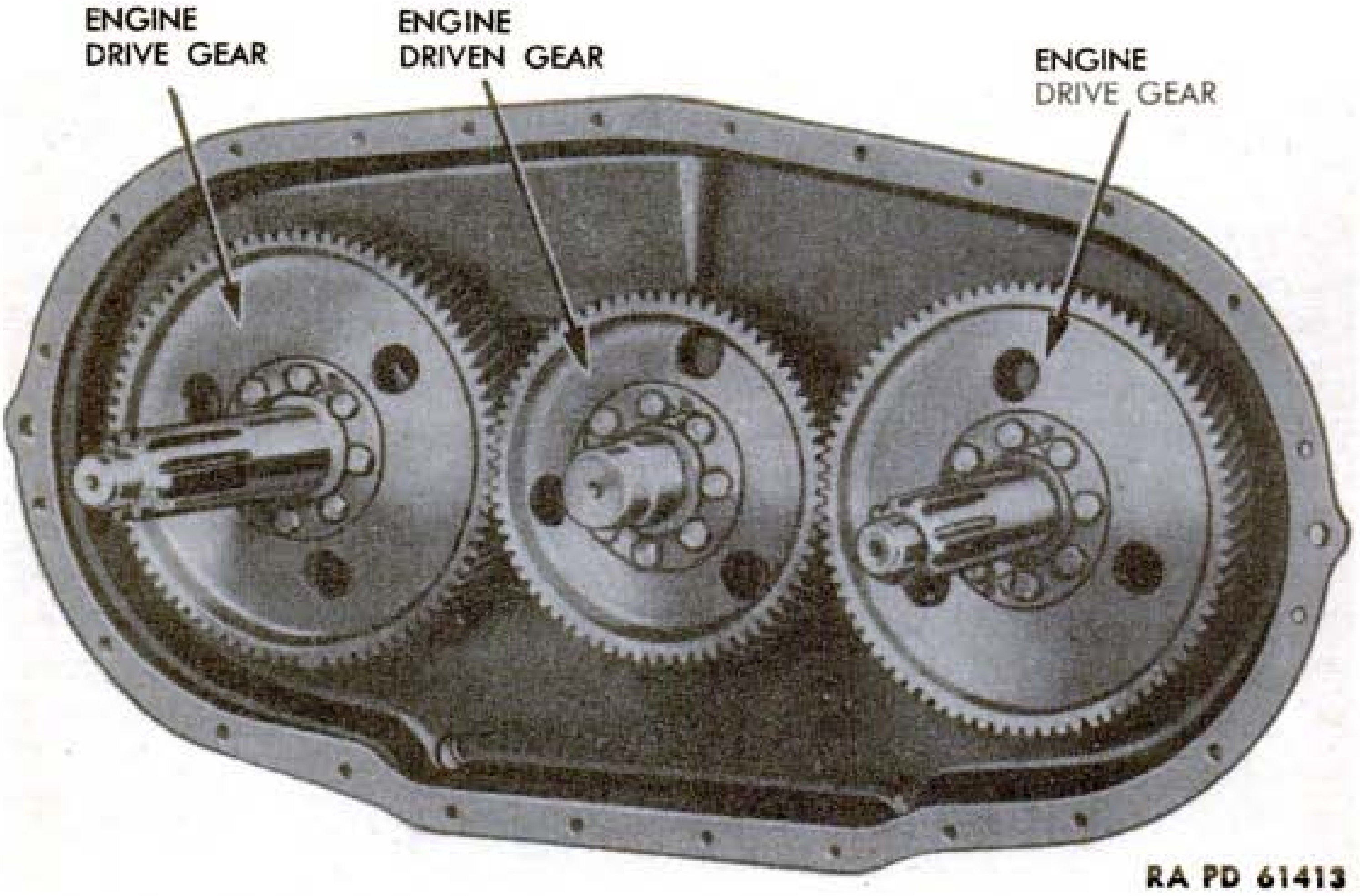

Figure 87—Drive and Driven Gears in Transfer Gear Unit

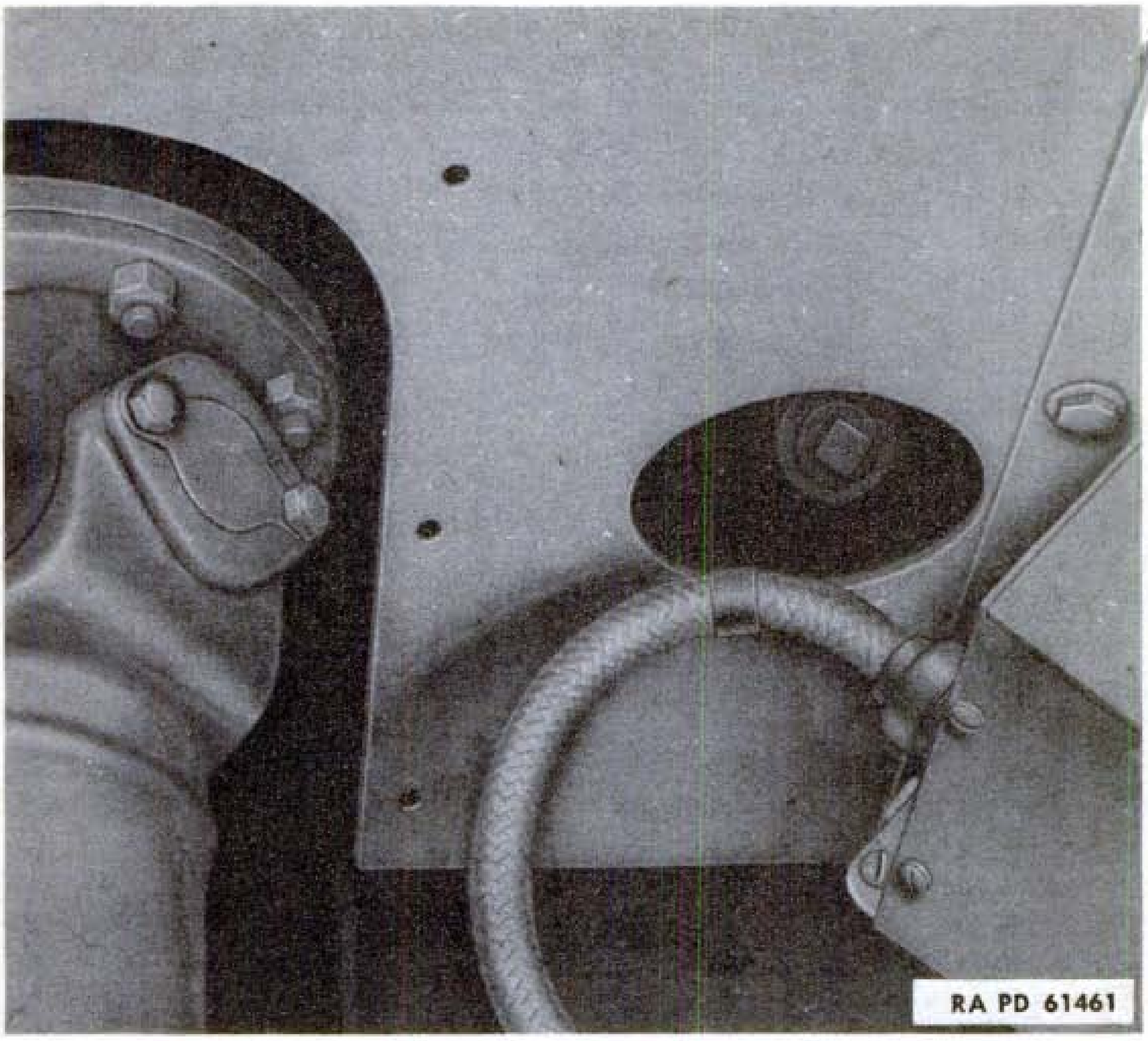

Figure 88—Transfer Gear Unit Filler Plug

bring level up to top of elbow. Install and tighten plug and lower the hinged door.

c. **To Drain Transfer Gear Unit.** Raise hinged door over rear universal joint. Remove filler plug. Place suitable container on floor under drain elbow at bottom of case and remove drain plug. After oil is drained install drain plug and tighten.

d. **To Flush Transfer Gear Unit.** Pour 2 quarts of SAE 10 engine oil into transfer gear case. Temporarily install filler plug. Operate engines at 1,000 revolutions per minute, with clutches engaged and transmission in neutral, for five minutes. Drain out flushing oil, install and tighten drain plug.

e. **To Refill Transfer Gear Unit.** Remove filler plug and pour 2½ quarts of SAE 30 engine oil into filler elbow. Oil level must be visible in elbow (fig. 88). Install and tighten plug. Lower the hinged door.

Section XIX

PROPELLER SHAFT AND UNIVERSAL JOINTS

120. PROPELLER SHAFT AND UNIVERSAL JOINTS.

a. Description. The propeller shaft and universal joints (fig. 89) transmit the driving force from the transfer gear unit to the transmission. The front universal joint sleeve yoke (slip hub) is splined and fits onto the splines on the front end of the propeller shaft. This simplifies installation of the propeller shaft and also takes care of slight variation in distance between the transfer gear unit and transmission. The universal joints are equipped with needle roller bearings which must be lubricated (par. 122) when universal joints are installed, and at regular lubrication intervals (par. 31).

121. INSPECTION OF PROPELLER SHAFT AND UNIVERSAL JOINTS.

a. Inspect Rear Universal Joint. See that clutch lockouts are in and transmission is in neutral. Raise door in fighting compartment floor over rear universal joint. Take out four bolts and remove rear universal joint cover. Examine inside of cover for grease thrown out of universal joint. If a large quantity of grease has been thrown onto cover, the universal joint oil seals leak, and the propeller shaft must be replaced. If oil seals are satisfactory, try turning propeller shaft back and forth by hand and move it up and down. If there is an appreciable movement, the bearings are worn and the propeller shaft must be replaced. If bearings are not worn, tighten the universal joint flange bolts to see if they are loose. Pull clutch lockout out. Rotate propeller shaft by hand and inspect weld around propeller shaft tube. Lubricate rear universal joint (par. 122 **b**). Install rear universal joint cover and lower the door in fighting compartment floor.

b. Inspect Front Universal Joint and Propeller Shaft. Lockout both clutches and shift transmission into gear. Take out bolts and remove front universal joint cover with inspection plate in place. Examine inside of cover, and if there is any quantity of grease, it indicates that universal joint bearing oil seals leak, and the propeller shaft assembly must be replaced. If seals do not leak, try turning propeller shaft by hand and work it up and down. Watch for move-

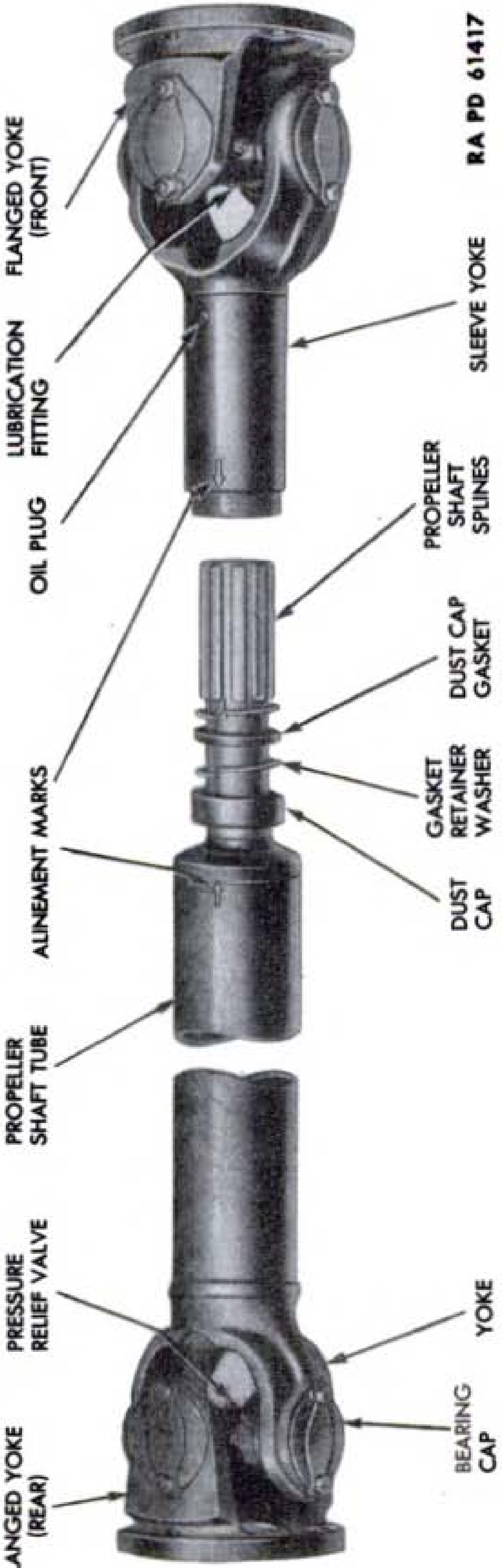

Figure 89—Propeller Shaft and Universal Joints

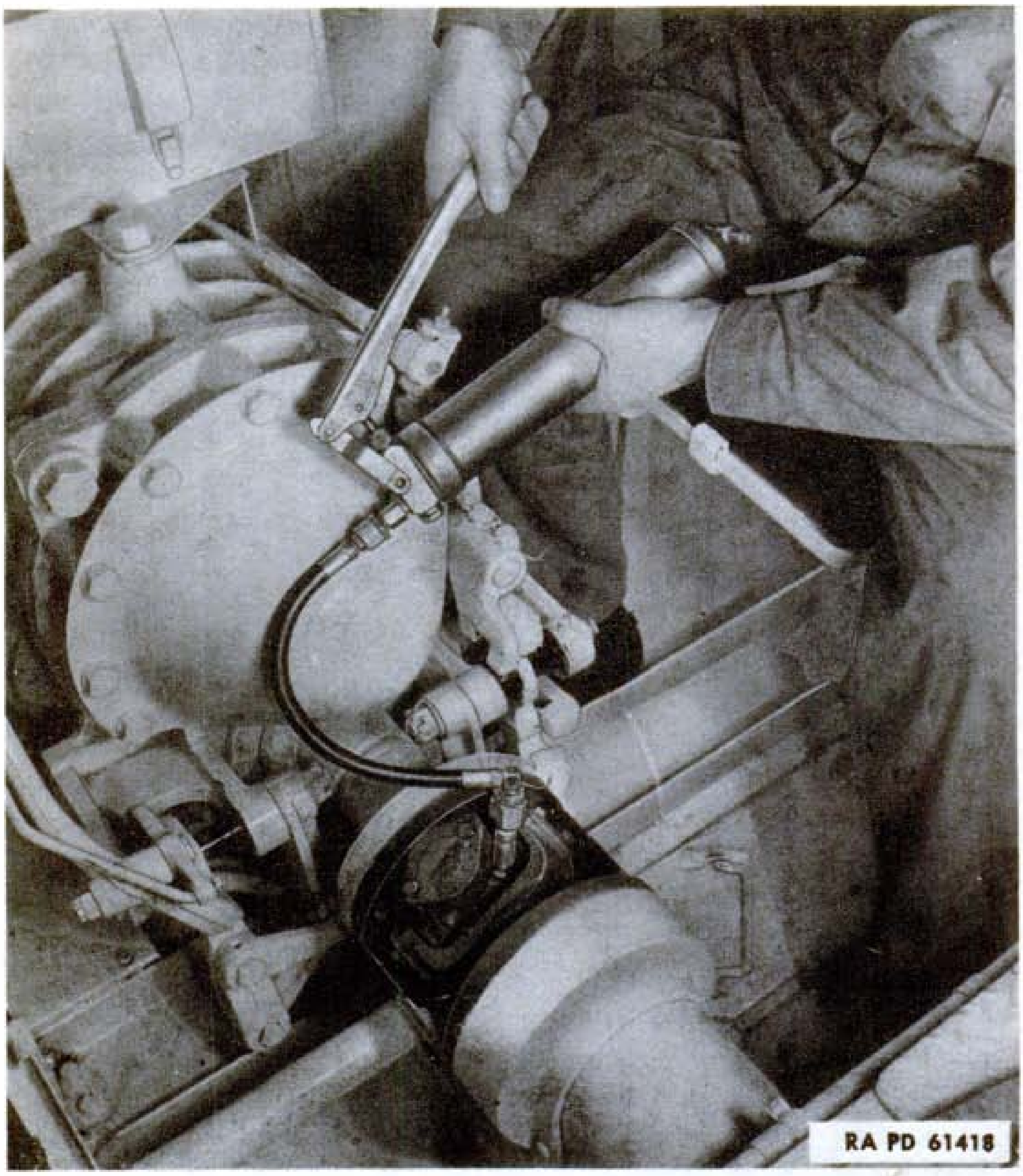

Figure 90—Lubricating the Front Universal Joint

ment between trunnion and yokes (fig. 89) which indicates bearings are worn and the propeller shaft must be replaced. Also check for worn splines in sleeve yoke (slip hub). If there is no appreciable wear, tighten the universal joint flange bolts to make sure they are not loose. Shift transmission into neutral. Rotate propeller shaft by hand and inspect weld on propeller shaft tube. Lubricate universal joint and slip hub (par. 122 a). Install front universal joint cover.

122. LUBRICATION OF UNIVERSAL JOINTS.

a. Lubricate Front Universal Joint. Take out two bolts and remove front universal joint inspection plate. Attach grease gun hose

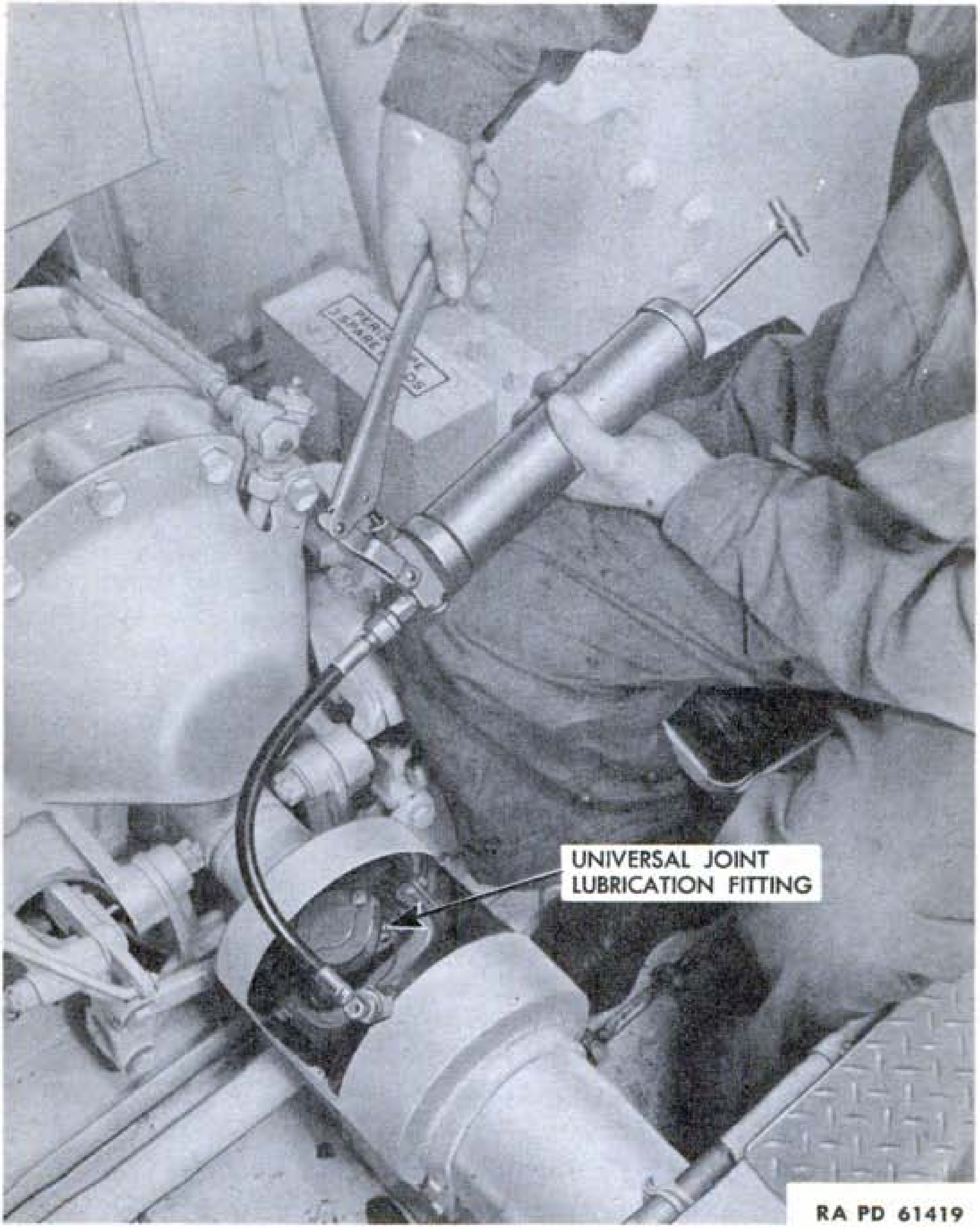

Figure 91—Lubricating the Sleeve Yoke on Front Universal Joint

lubrication fitting at side of trunnion (fig. 90). Pump lubricant into joint until it starts coming out the pressure relief valve fitting in center at rear of trunnion. Unscrew oil plug on sleeve yoke (slip hub), and screw in a spare lubrication fitting. Attach grease gun, and pump lubricant in until it starts coming out the rear of the dust cap (fig. 91). Remove lubrication fitting, and screw oil plug in tightly. Install inspection plate, and tighten bolts.

b. Lubricate Rear Universal Joint. Raise fighting compartment door over the rear universal joint. Take out four bolts, and remove

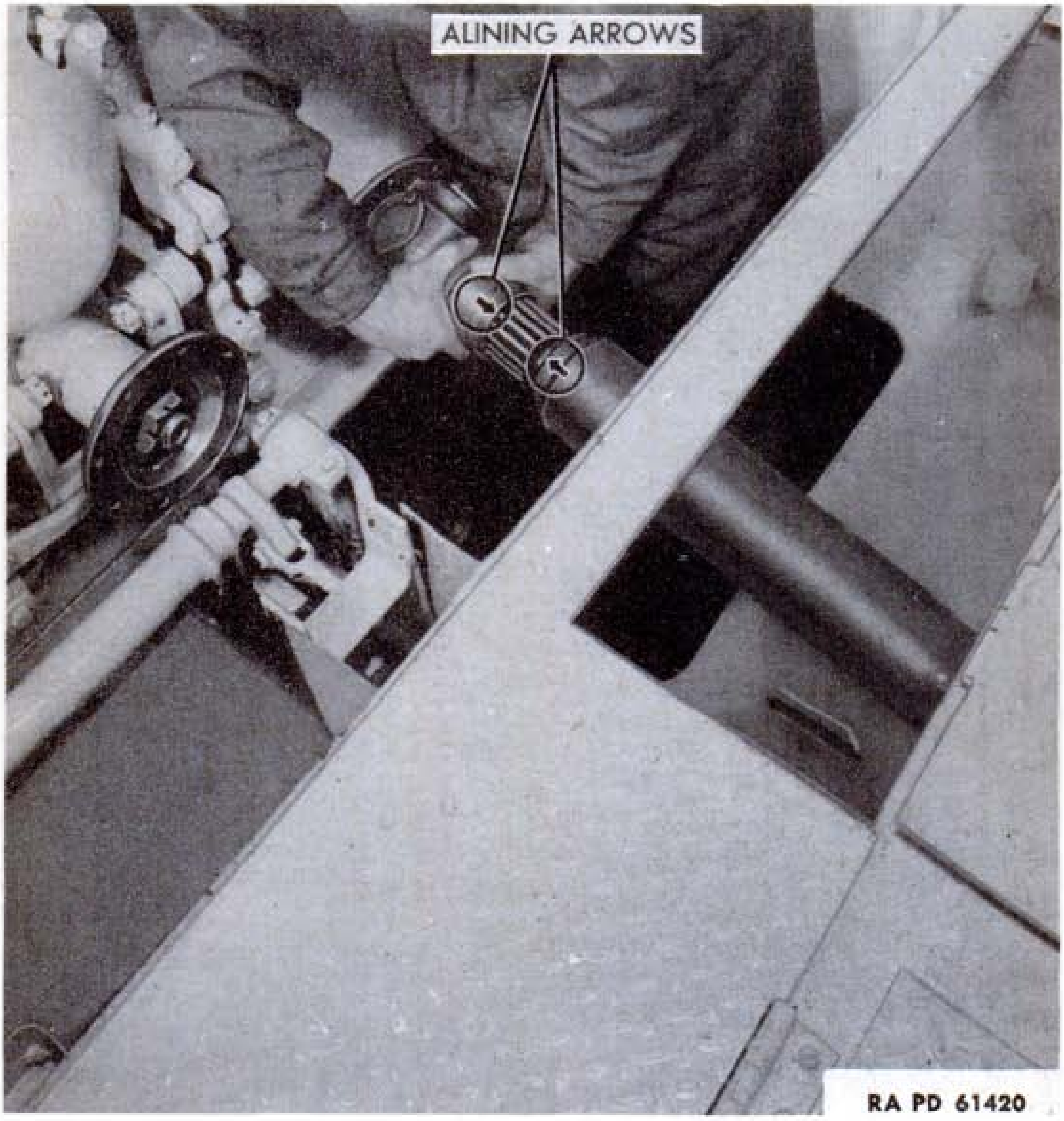

Figure 92—Removing Front Universal Joint from Propeller Shaft

rear universal joint cover. Attach grease gun hose to lubrication fitting at side of trunnion (fig. 89). Pump lubricant into joint until it starts coming out of the pressure relief valve in center at front of trunnion (fig. 89). Install rear universal joint cover and lower the door.

123. REMOVAL OF PROPELLER SHAFT AND UNIVERSAL JOINTS.

a. Remove Propeller Shaft Housing. To provide additional working space, first remove headlight from storage bracket on hull right side plate. Also remove assistant driver's seat (par. 173 **b**) and place in out-of-way position. Take out bolts which attach front universal joint cover to hull floor and to propeller shaft housing, and lift cover off. Raise fighting compartment rear door and remove bolts

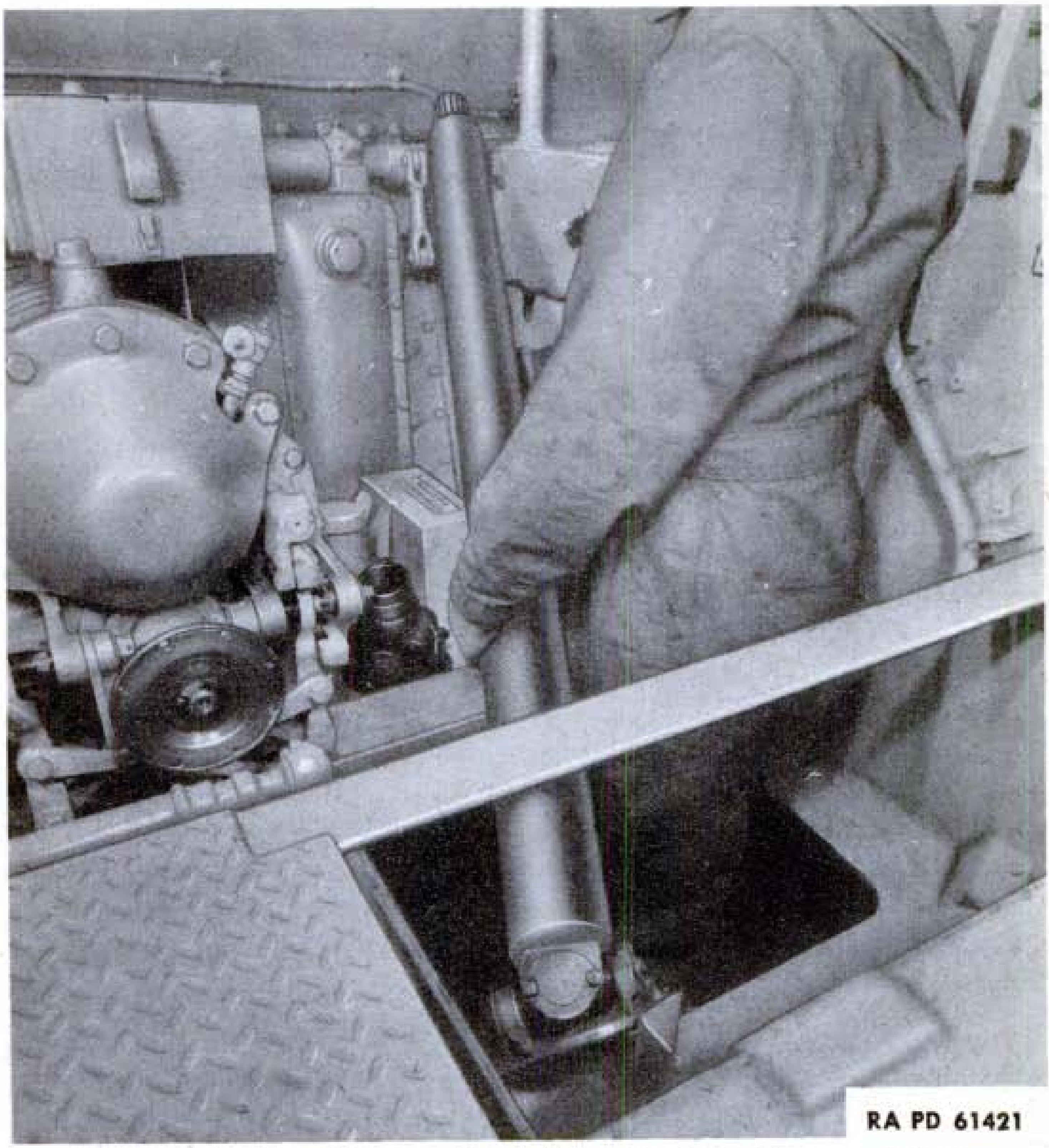

Figure 93—Positioning Propeller Shaft to Lower it into Escape Hatch

which attach rear universal joint cover, and lift cover out. Raise doors in fighting compartment floor and clear stowage spaces to provide access to propeller shaft housing center cover. Release and lower the escape hatch (par. 172 **b**). Take out bolts which attach propeller shaft housing rear cover, and remove cover. Remove bolts which attach propeller shaft housing center cover to right and left side plates. Raise cover clear of housing side plates and pull cover forward into assistant driver's compartment and out through escape hatch.

b. Disconnect Front Universal Joint. Lockout both clutches. Unscrew sleeve yoke dust cap (fig. 89). Unscrew nuts on front universal joint flange and remove bolts. Pull universal joint back on splines and lower the shaft onto the propeller shaft housing strap.

c. Disconnect Rear Universal Joint. Unscrew nuts on rear uni-

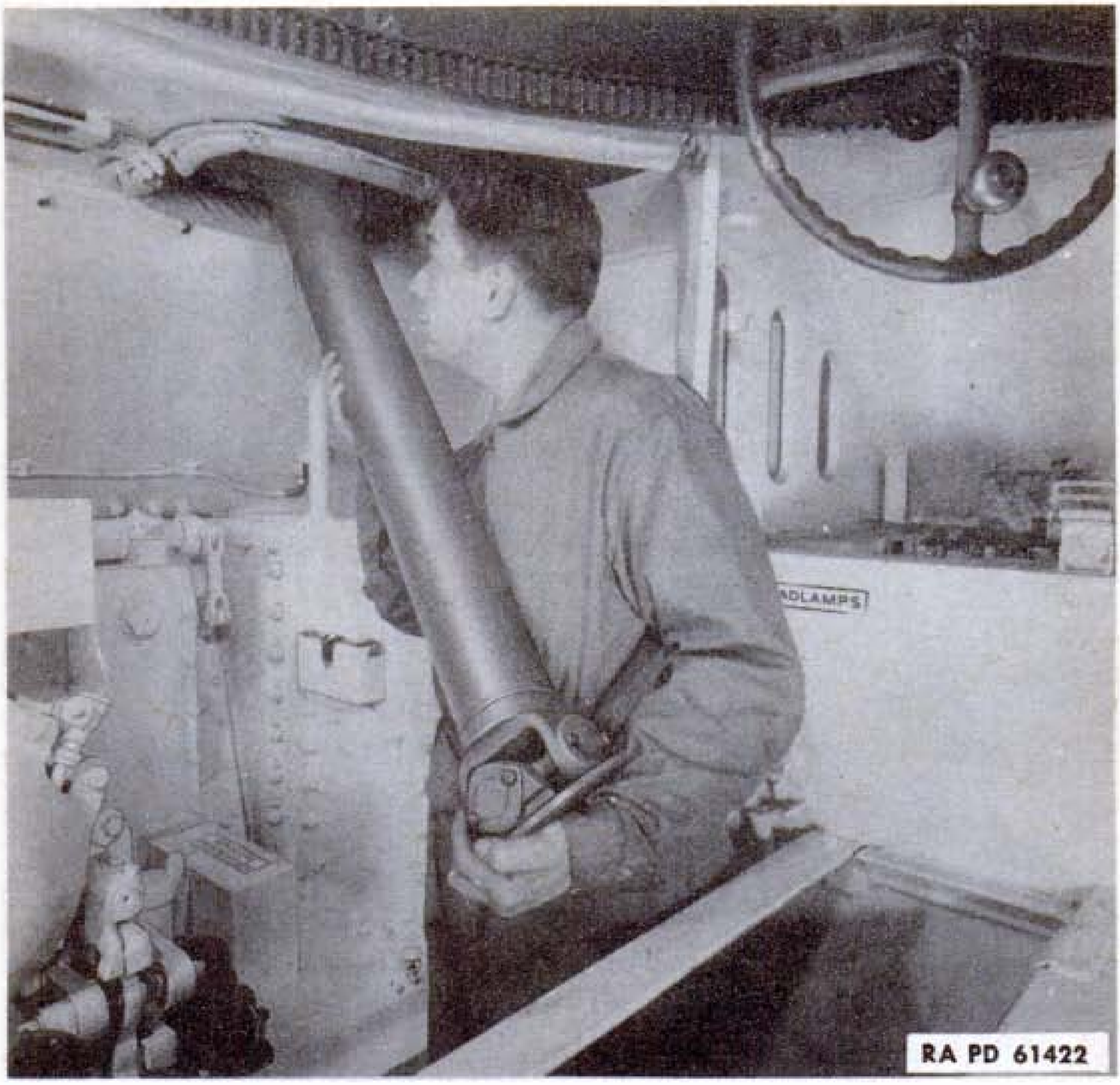

Figure 94—Lifting Propeller Shaft Out Through Assistant Driver's Door

versal joint flange, and remove bolts. Pull universal joint forward from flange on engine driven shaft, and lower the propeller shaft.

d. Remove Propeller Shaft from Vehicle. With one man at front and another at rear of propeller shaft, raise shaft up and over the right side plate of propeller shaft housing, and place it on hull floor. Pull front universal joint off splines on end of shaft (fig. 92). Remove periscope from assistant driver's door, and open and latch door. Move front end of propeller shaft toward right front corner of hull, raising it as shaft is being pulled forward (fig. 93). This will permit rear universal joint to clear the inner rear corner of escape hatch so shaft can be lowered through escape hatch onto ground. Lift shaft up through assistant driver's door and remove it from the vehicle (fig. 94). Slide front universal joint onto splines on propeller shaft, and screw dust cap onto sleeve yoke.

124. INSTALLATION OF PROPELLER SHAFT AND UNIVERSAL JOINTS.

a. Place Propeller Shaft into Vehicle. Unscrew dust cap and pull front universal joint off the propeller shaft. Lower rear universal joint end of propeller shaft through assistant driver's door and down through escape hatch until it rests on the ground. Swing front end of propeller shaft into right front corner of hull. Raise shaft until rear universal joint clears rear inner corner of escape hatch so rear of shaft can be moved onto the hull floor (fig. 93). Move shaft back on floor on right side of propeller shaft so that front universal joint can be positioned on shaft (fig. 92). Rotate the shaft so that alining arrow on front end of propeller shaft tube is up. Make sure that dust cap, retainer washer, gasket and another retainer washer are placed on the propeller shaft in this exact order and that the cork gasket is serviceable (fig. 89). Position the front universal joint on the propeller shaft splines so that the arrow on rear of the sleeve yoke (slip hub) is in line with arrow on shaft, and slide joint back onto splines (fig. 92). Slide gasket and retainers against sleeve yoke, and screw dust cap onto sleeve yoke and tighten. With one man at front and another at rear of propeller shaft, lift it up and over the right plate on propeller shaft housing.

b. Connect Rear Universal Joint. Wipe rear universal joint flange and flange on engine driven shaft clean. Position the universal joint flange, and install bolts from rear with the nuts on universal joint flange side. Tighten nuts. Lubricate rear universal joint (par. 122 **b**).

c. Connect Front Universal Joint. Wipe universal joint flange and flange on transmission shaft clean. Position the universal joint flange, and install bolts from the front with nuts on universal joint flange side. Tighten nuts. Lubricate front universal joint and sleeve yoke (par. 122 **a**).

d. Install Propeller Shaft Housing. Complete the assembly by reversing the remainder of the removal procedure (par. 123).

Section XX

POWER TRAIN

125. POWER TRAIN.

a. General Description. The power train is an assembly which includes the transmission, controlled differential with steering brakes, and the final drives with the sprockets which drive the tracks (fig. 95). The units are bolted to, or assembled in, a large one-piece casting, called the differential housing, which is bolted to the hull and forms the front part of the vehicle (fig. 1). The final drive units can be removed as separate assemblies with the power train in the vehicle. The brakes are adjusted, and brake shoe assemblies can be replaced with the power train in the vehicle. But the transmission, and the differential housing assembly are always removed or installed after the power train is removed from the vehicle.

126. TRANSMISSION.

a. Description. The transmission is an extra heavy duty type with five forward speeds and one reverse (fig. 95). The transmission

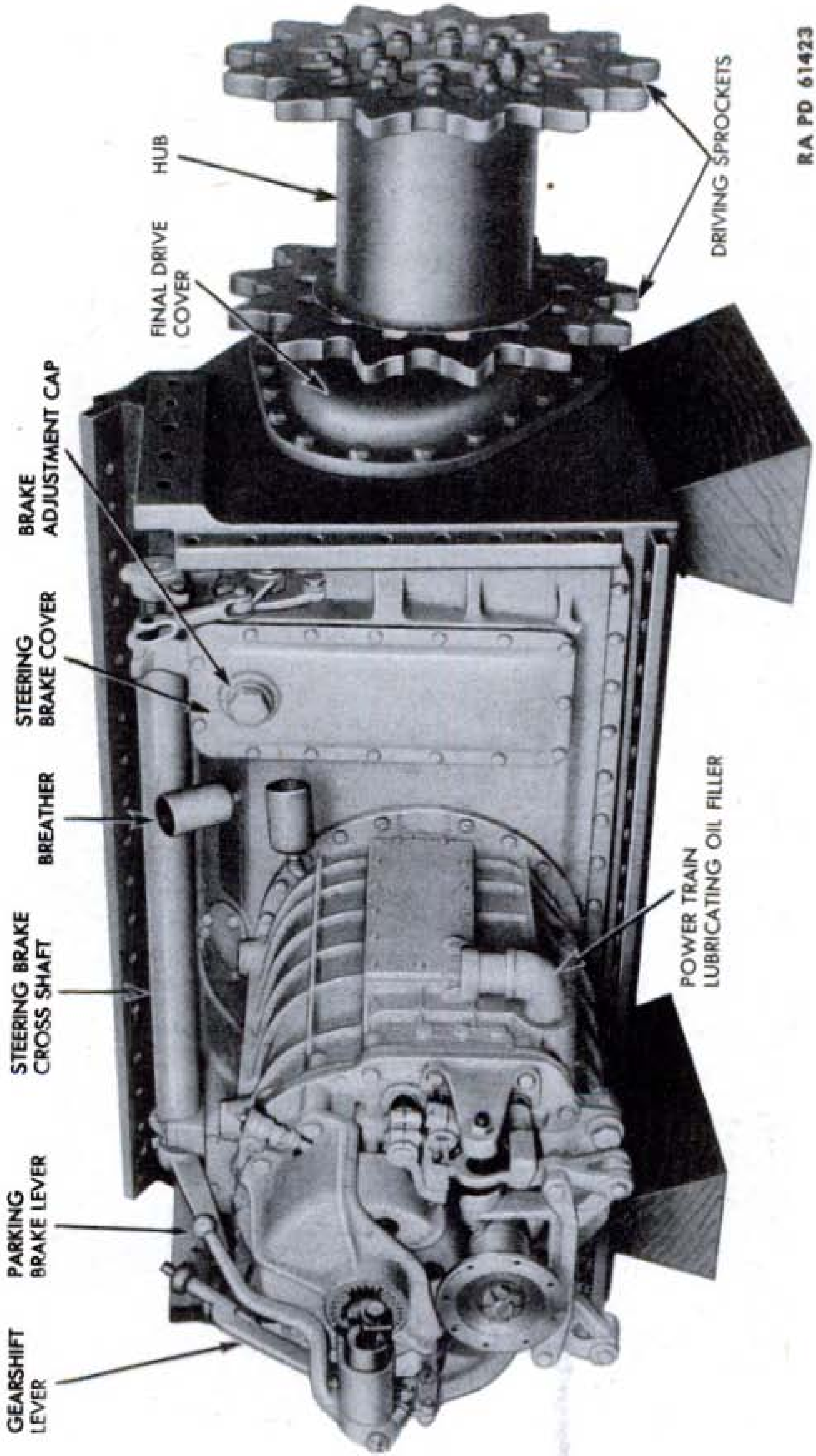

RA PD 61423

Figure 95—Power Train

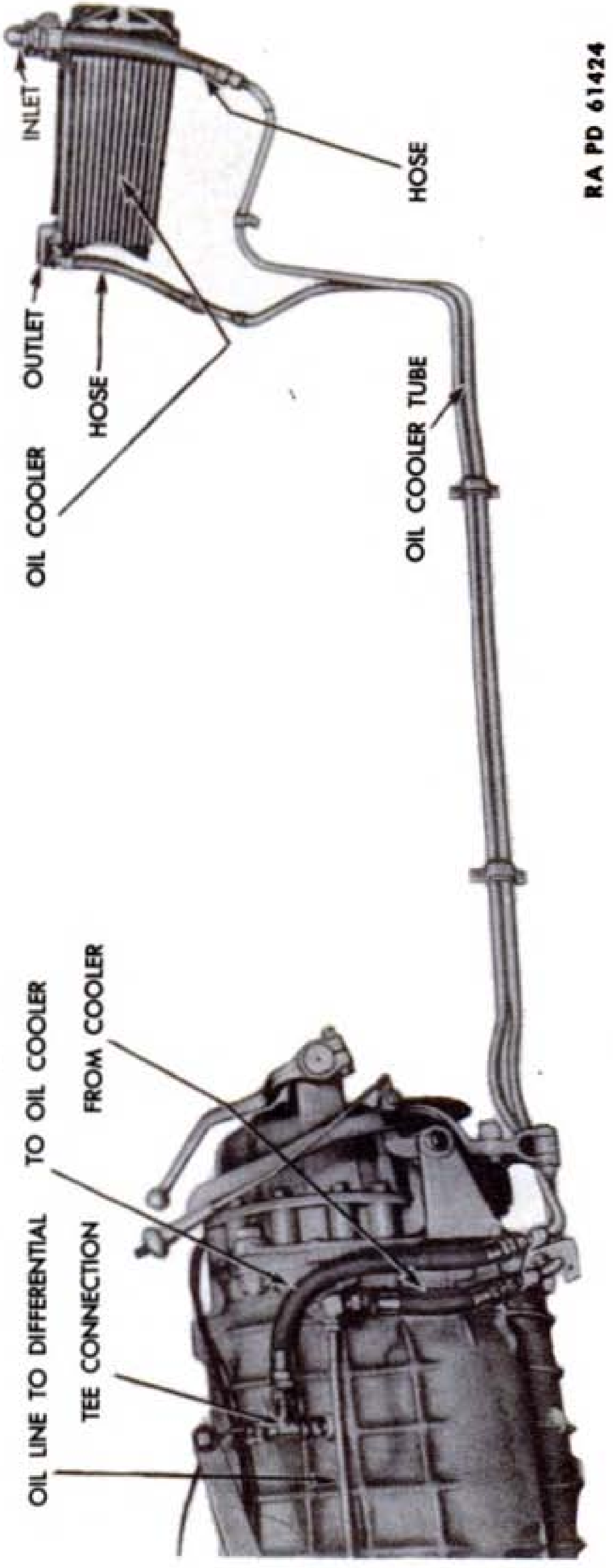

Figure 96—Transmission, Oil Cooler, and Tubes

case is bolted to the differential carrier. The pinion which drives the differential bevel drive gear (ring gear) is mounted on the forward end of transmission output shaft. On earlier vehicles the parking brake is mounted on the rear of the transmission case (par. 134 **a**).

127. DIFFERENTIAL.

a. Description. The differential permits the outer track to travel faster than the inner track on turns or one track to travel faster than the other on uneven ground. Because the differential is the controlled type, it also provides a means for steering and stopping the vehicle. When the brake on either brake drum is applied, it puts a planetary gear train on that side of the differential into motion. As a result, the track on the same side of the vehicle as the brake which is being applied is slowed down, the other track speeded up, and the vehicle steers to the side of the slower moving track. Because of the arrangement of the gears, the inner track can never be completely stopped when making a turn, as long as the outer track is moving, regardless of the force applied on the steering brake. This provides the vehicle with greater stability and makes it safer to steer under all conditions.

128. LUBRICATION OF POWER TRAIN.

a. General Description. The transmission, differential, and final drives are lubricated by a single lubrication system. An oil pump in the transmission, driven by the transmission input shaft, draws oil from a sump in the differential housing and forces it through lines to the oil cooler on the engine compartment bulkhead and back into the transmission (fig. 96). The cooled oil lubricates the transmission gears and bearings and flows into the sump in the differential housing. A tube leading from a tee connection in the return line from the oil cooler delivers oil to the ring gear and pinion and the oil also lubricates the differential gears and bearings. The steering brake drums turn in a bath of oil which absorbs much of the heat generated by braking. The oil level maintained in the final drive housing provides splash lubrication for the final drive gears and bearings. The power train lubricating system has a capacity of 38 U. S. gallons with single anchor brakes and 43 gallons with double anchor brakes.

b. To Check Power Train Oil Level. Before checking the oil level in the power train, the vehicle must be driven sufficiently to warm up the oil, and afterwards must stand on level ground for at least five minutes to permit oil to drain back so that the level can be checked accurately. To check the oil level, unscrew and remove oil level indicator (filler cap) on right side of transmission case, and with a clean cloth, wipe off measuring rod attached to the cap (fig. 97). Insert measuring rod in filler opening so that cap rests on edge of opening. Do not screw cap on. Lift measuring rod out, check oil

b. Removal of Track Idler Wheel.

(1) DISCONNECT THE TRACK. Release the track tension (par. 150). Disconnect the track below the idler wheel to be removed (par. 152 **b**) and move upper section of track forward on track support rollers.

(2) PULL IDLER WHEEL. Take out six bolts and remove cap and gasket. Remove the cotter pin from spindle nut. Unscrew nut with idler wheel shaft locknut socket wrench (41-W-2574-300) and remove the flat washer. Attach the idler wheel puller (41-P-2940-800) to hub using all six bolts. Hold puller from turning, with wrench on body of puller, and turn the puller screw clockwise. When wheel is free lift it straight off spindle to avoid damaging oil retainers (grease seals). Remove idler wheel puller.

c. Disassembly of Track Idler Wheel.

(1) REMOVE IDLER WHEEL OUTER BEARING. Place idler wheel, outer side up, on two blocks spaced to clear the hub. Remove the nut and cone-shaped washer from end of screw in idler wheel outer bearing puller (41-P-2900-27). Position the puller legs on top of idler wheel hub. Place washer, with tapered side up, on lower end of puller screw and install nut. Use wrench to hold screw from turning and turn the screw nut on top of puller legs to pull bearing out of hub. Take off nut and washer and remove bearing from puller screw. Lift bearing spacer out of idler wheel hub (fig. 171).

(2) REMOVE IDLER WHEEL INNER BEARING AND OIL RETAINERS. Place the idler wheel inner bearing drift (41-D-1543-800) down inside hub and center the drift in the inner race of the wheel bearing. Attach idler wheel puller (41-P-2940-800) to hub with six bolts. See that the blocks under wheel are spaced to clear the hub. Turn puller screw in to push the oil retainers and inner wheel bearing out of hub (fig. 130). Remove the puller.

d. Inspection of Track Idler Wheel After Disassembly. Thoroughly clean the wheel and wash out hub. Inspect wheel for cracks. Inspect bearing bores for wear. Wash the bearings in clean Diesel fuel and carefully inspect for cracked or chipped balls and worn races (fig. 130). See that ends of spacer are not galled. Replace worn bearings. If oil retainers (grease seals) show wear, they must be replaced. Make sure the lubrication fitting and pressure relief fittings are not damaged. Clean spindle and carefully inspect for cracks and wear. Make sure it is not bent. Replace spindle if damaged (par. 157 g).

e. Assembly of Track Idler Wheel.

(1) INSTALL IDLER WHEEL OUTER BEARING. Place track idler wheel, outer side up, on blocks. Pack bearing with general purpose grease. Start the bearing squarely into the hub by tapping lightly

with hammer on outer race. Place idler wheel outer bearing drift (41-D-1540-550) on bearing and center the drift in the bearing inner race. Use arbor press or push-and-pull hydraulic jack and press bearing into hub until it is firmly seated. Remove the drift.

(2) INSTALL IDLER WHEEL INNER BEARING AND SPACER. Turn wheel over on blocks. Place bearing spacer, smaller end first, into hub and against outer bearing (fig. 130). Pack inner bearing with general purpose grease. Start bearing squarely into hub by tapping lightly on outer race with hammer. Center the idler wheel inner bearing drift (41-D-1540-500) on bearing. Use arbor press or push-and-pull hydraulic jack and press bearing into hub until it is firmly seated. Remove drift.

f. Installation of Track Idler Wheel.

(1) INSTALL OIL RETAINERS ON SPINDLE. Soak the retainers to be installed for at least 15 minutes in SAE 10 engine oil to soften the leather seals. Make a two-piece spacer not over $\frac{1}{16}$-inch thick to be used to firmly seat both oil retainers in the hub to provide clearance between the outside retainer and the flange on spindle. A suitable spacer easily can be made by removing the thick ring from a worn idler wheel oil retainer (grease seal) and sawing it in half. Lightly coat the spindle with general purpose grease. Place one oil retainer on the spindle with the leather lip facing the spindle flange and carefully work it onto the shoulder next to the flange. Next position the second oil retainer (grease seal) the same way with leather lip facing the spindle flange. Insert the halves of the spacer, previously made, between the first oil retainer and flange on spindle so the outer edges are even with the oil retainer and push both retainers tightly against spacer to hold it in position.

(2) INSTALL IDLER WHEEL ON SPINDLE. Push the idler wheel onto spindle as far as it will go by hand. Screw the idler wheel installing tool (41-T-3216-150) tightly onto end of spindle. Turn nut on installing tool screw and push idler wheel into place on spindle, watching to see that the oil retainers enter the bore in the hub evenly as wheel is being pushed on. Stop turning the nut when bearings are felt to seat firmly against shoulders on spindle and back off on nut at least three full turns. Using a wood block to protect idler wheel inner flange, drive the wheel outward sufficiently so the halves of the split spacer used to seat the oil retainers (grease seals) can be removed with a screwdriver. Again screw down the installing tool nut to seat the bearings on the spindle. Unscrew tool from end of spindle. Install flat washer and slotted nut on spindle. Tighten the nut, using idler wheel shaft lock nut socket wrench (41-W-2574-300). Insert and spread new cotter pin. Using new gasket, install the idler wheel cap with six bolts and lock washers and tighten bolts. Fill hub with general pur-

pose grease until it flows out of relief fitting (fig. 129). Connect track (par. 152 c) and adjust track tension (par. 150).

g. **Removal of Track Idler Wheel Spindles.** Release track tension (par. 150). Disconnect track below idler wheel (par. 152 **b**) and remove idler wheel (par. 157 **b**). Unscrew both clamping bolts (fig. 125) and take out the bolt nearest locking collar. Screw spreader bolt (left-hand threads) in, to spread clamp. Remove cotter pin and locking collar from inner end of spindle. Work spindle out of bracket (fig. 130).

h. Installation of Track Idler Wheel Spindle. Coat spindle lightly with general purpose grease, and work it into bracket. Install clamping bolt which was removed. Place locking collar on shaft and install and spread new cotter pin (fig. 118). Install idler wheel (par. 157 **f**). Connect track (par. 152 **c**) and adjust track tension (par. 150).

158. BOGIES.

a. Description. The six bogies provide the spring suspension for the vehicle (fig. 118). Practically the total vehicle weight, excluding the section of the track on the ground, the bogie wheels and some other bogie parts, is supported by twelve large volute springs. A pair of springs are mounted in each bogie. The single lower spring seat also serves as a movable trunnion on which two double arm levers pivot. The ends of these levers bear directly on the bogie arms near the ends attached to the bogie wheels. Thus the weight supported by each pair of volute springs is transferred to two bogie wheels which bear against the track in contact with the ground. This design provides independent vertical movement of the wheels when the track passes over uneven surfaces. The lower section of the track traveling on the ground is guided by the bogie wheels. The upper section of the track, between the drive sprockets and idler wheels, is supported and guided by track support rollers. The support rollers are mounted on brackets bolted to the rear sides of the bogie brackets.

159. BOGIE WHEELS.

a. Description. The bogie wheels turn on either ball or tapered roller bearings which are mounted on a gudgeon which supports and positions the wheel ends of the bogie arms. Bogie wheels are equipped with solid rubber tires which run on the inside of the track (fig. 118).

b. Removal of Bogie Wheel.

(1) RAISE BOGIE WHEEL. Place the bogie wheel lift (41-L-1375) on the track under the arms of the bogie wheel to be lifted and with the foot of the lift pointing away from the bogie wheel (fig. 131). Slowly move the vehicle either forward or backward, depending upon which bogie wheel is to be removed, to push the lift into a vertical

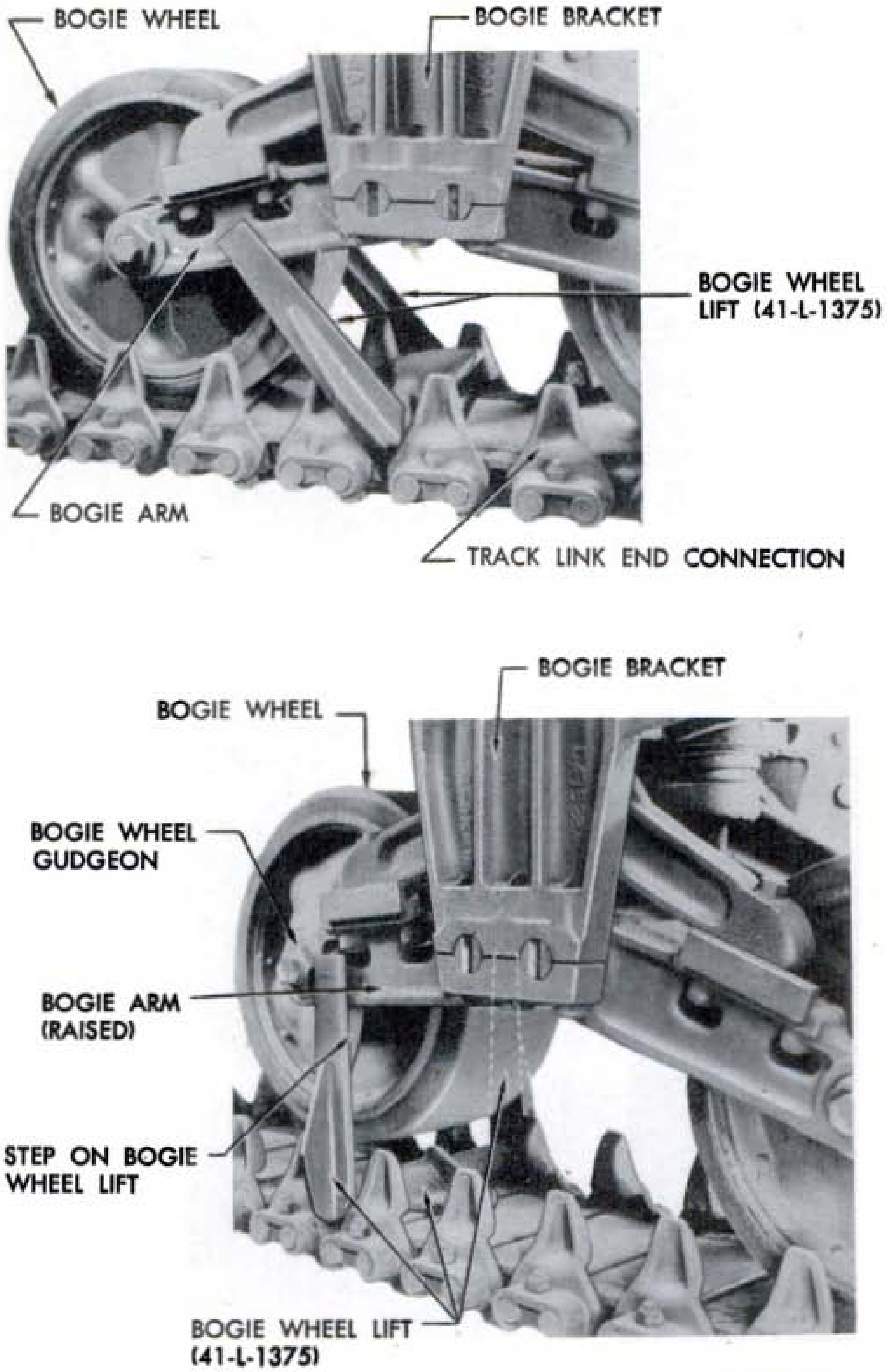

RA PD 61467

Figure 131—Raising Bogie Wheel with Lift

position and raise the wheel (fig. 131). NOTE: *It will be necessary to disconnect the track below the sprocket when using lift to raise front bogie wheel.* Set the parking brake. Inspect bogie wheel (par. 148 **f** (3)).

(2) REMOVE BOGIE WHEEL GUDGEON. Use bogie wheel nut socket wrench (41-W-2573-150), and remove nut on inner end of gudgeon. If castellated nut is used, first remove cotter pin. On outer end of gudgeon remove the screw and washer used to protect the threads on the end of gudgeon. Screw threaded end of slide-hammer type gudgeon puller (41-P-2957-33) into end of bogie wheel gudgeon. Bump the hammer (weight) out hard against stop on end of puller as required to pull the gudgeon. Remove the puller from the gudgeon. Roll wheel away from bogie and lift out.

c. Disassembly of Bogie Wheel. Place bogie wheel, outer side up, on blocks spaced to clear the hub, with cloth under hub to protect bearings from dirt. Lift out the bearing outer spacer. Insert brass drift through outer bearing and move center spacer to one side so drift is against inner race of inner bearing. Hammer on drift, moving it around each time, to drive bearing out squarely. The bearing outer spacer, the two oil retainers and the bearing center spacer will drop out when the bearing is removed. Turn the wheel over, and drive out the outer bearing in the same manner.

d. Inspection of Bogie Wheel After Disassembly. Clean wheel and inside of hub. Inspect tire and rim. Examine wheel for cracks and broken welds. Carefully inspect bearing bores in hub and if worn due to bearing turning, replace the wheel. Wash bearings, spacers, and oil retainers (grease seals) in clean Diesel fuel. Inspect bearings for wear and damage. Inspect bearing center spacer, oil retainers and bearing outer spacers for wear or damaged oil seals. Inspect gudgeon. Replace wheel or any other unserviceable parts. Install new pressure lubrication and oil relief fittings if necessary. If bogie wheel bearings are tapered roller type and bearing clearance was excessive (par. 148 **e**), replace with double row ball bearings CABX3AL.

e. Assembly of Bogie Wheel. Bogie wheel bearings may be either ball or tapered roller type. Following are the procedures for correct assembly with either type. Oil retainers may be either leather or neoprene type and each requires that different outer spacers be used. With leather oil retainers (B132704-AB), bearing outer spacers B153965 must be used. With neoprene type oil retainers (A244899), bearing outer spacers B197500 must be used.

(1) INSTALL BALL BEARINGS. Place bogie wheel on blocks. Wipe bearing seat clean. Pack bearing with general purpose grease to supply initial lubrication. Start bearing squarely in bore by tapping lightly around outer race. Place bogie wheel bearing installing drift

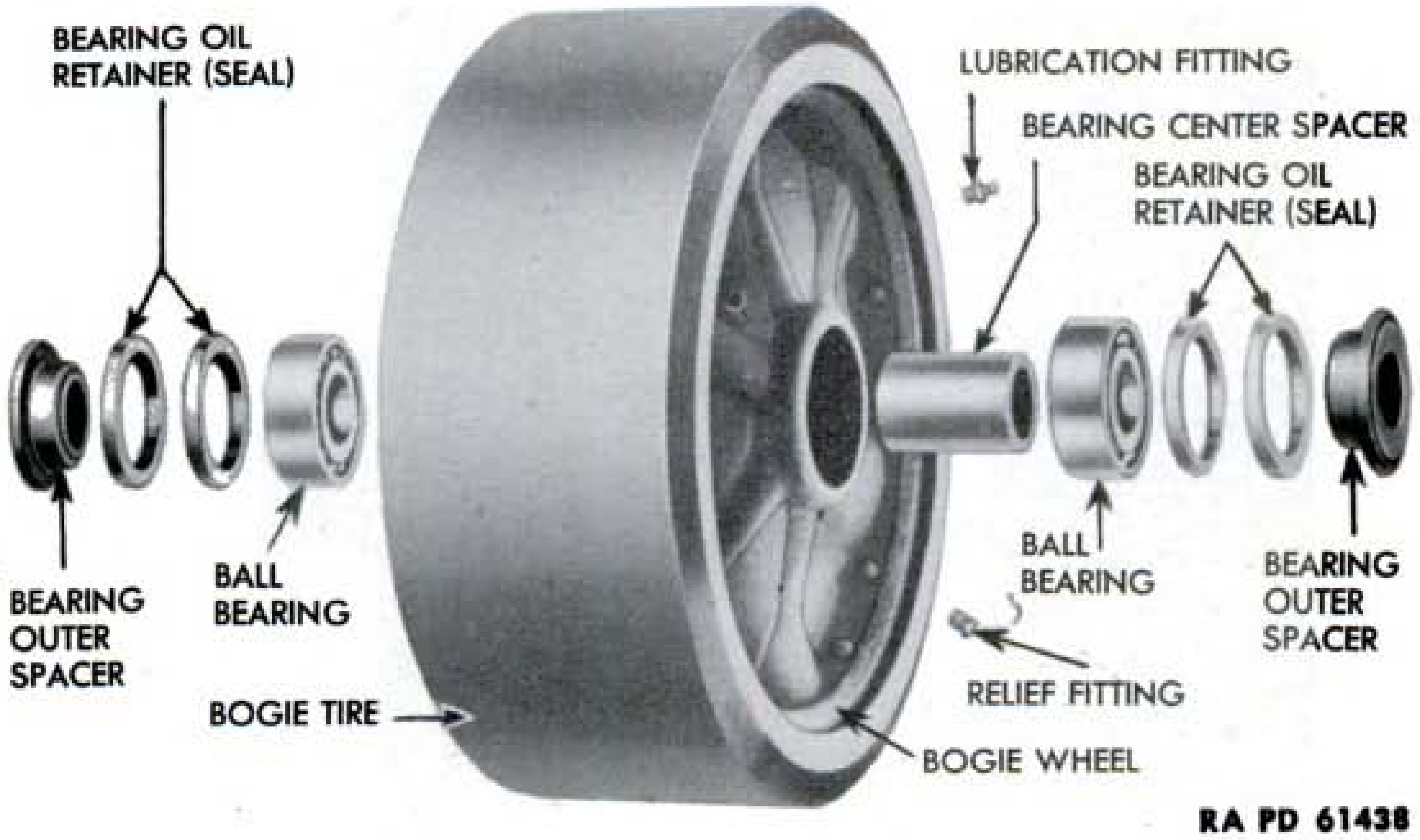

Figure 132—Bogie Wheel Parts

(41-D-1463) on bearing and center it. Use arbor press or push-and-pull hydraulic jack, and press bearing in until it is seated. Turn wheel over, and wipe bearing seat clean. Place the center spacer down on the bearing and move it over to edge of bearing seat (fig. 132). End of spacer must not extend above bearing seat. Install the other bearing in similar manner, centering the spacer before bearing is seated. Make sure that the outer bearing spacers are the correct ones to use with the type of oil retainers being installed. Leather type retainers must be soaked in SAE 10 engine oil for 15 minutes before installing to soften the leather. Work two oil retainers onto each bearing outer spacer with lips of both retainers facing the flange on the spacer. Install the retainer with spacers in the hub.

(2) INSTALL TAPERED ROLLER BEARINGS. When installing tapered roller bearings in bogie wheels, never install one new bearing and one used bearing. If one bearing has to be replaced, always install two new bearings and a new center spacer. Place wheel on blocks and wipe the bearing seat clean. Start bearing outer cup squarely in bore, with thick edge down, by tapping with hammer. Using a brass drift, drive bearing cup down against seat. Turn wheel over, wipe out seat and install other outer bearing cup in similar manner. Pack rollers with general purpose grease, and place cone and rollers in cup. Install two oil retainers on bearing outer spacer with lips facing flange on retainer, and install retainer in hub. Turn wheel over, position the bearing center spacer, and install cone and rollers and other retainer in similar manner.

f. Installation of Bogie Wheel. Apply general purpose grease to each side of bogie wheel hub and position gudgeon pin oil seals, one on each side, with felt side in and rubber side out. Screw bogie wheel installing guide (41-G-2500) onto inner end of gudgeon. Lower the bogie wheel into position between the arms with lubrication fitting to the outside. Raise wheel to line up holes and drive gudgeon in part way. See that Woodruff key is seated in gudgeon and lined up with keyway in arm. Screw bolt with lockwasher into threads in head of gudgeon, first coating bolt threads with general purpose grease, and tighten bolt. Remove gudgeon installing guide and, depending upon type of gudgeon nut removed, install castellated nut or new safety nut. Tighten nut and check bearings by turning wheel to make sure bearings are not tight and that there is no play. If wheel does not turn freely and bearings are tapered roller bearings, wheel must be removed because length of bearing center spacer is

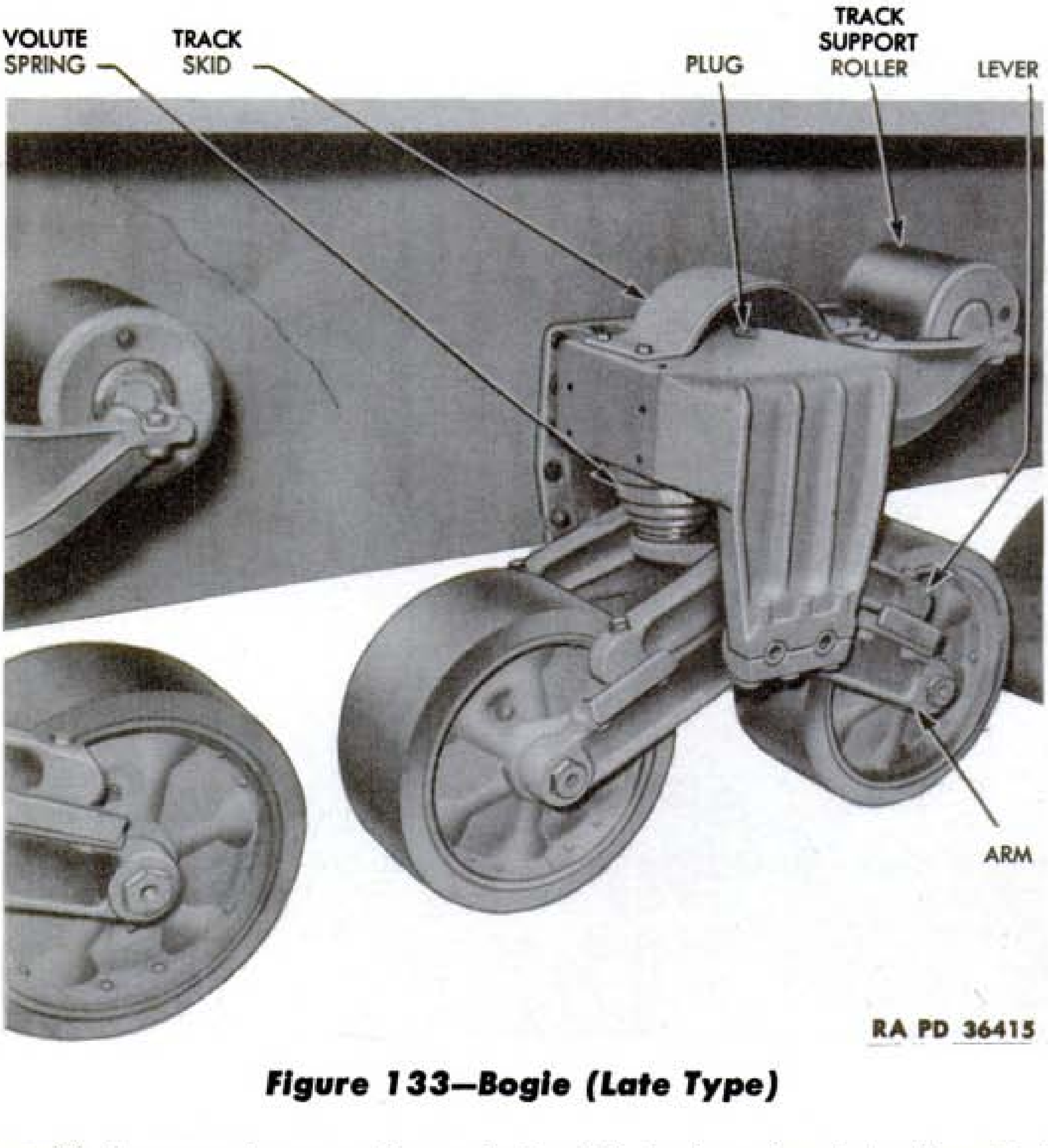

Figure 133—Bogie (Late Type)

not correct and higher authority must be notified. If bearings are all right, install cotter pin and spread if castellated gudgeon nut is used. Fill bogie wheel hub with general purpose grease until it flows from pressure relief fitting. Move vehicle to lower the wheel off lift, and remove the lift.

160. VOLUTE SPRINGS.

a. Description. The suspension springs are called volute springs because they are coiled into a spiral shaft (fig. 133). When the springs are in position on the vehicle, the greater portion of each coil is nested inside the adjacent coil. To insure uniform spring action, the springs in each bogie always must be replaced in pairs.

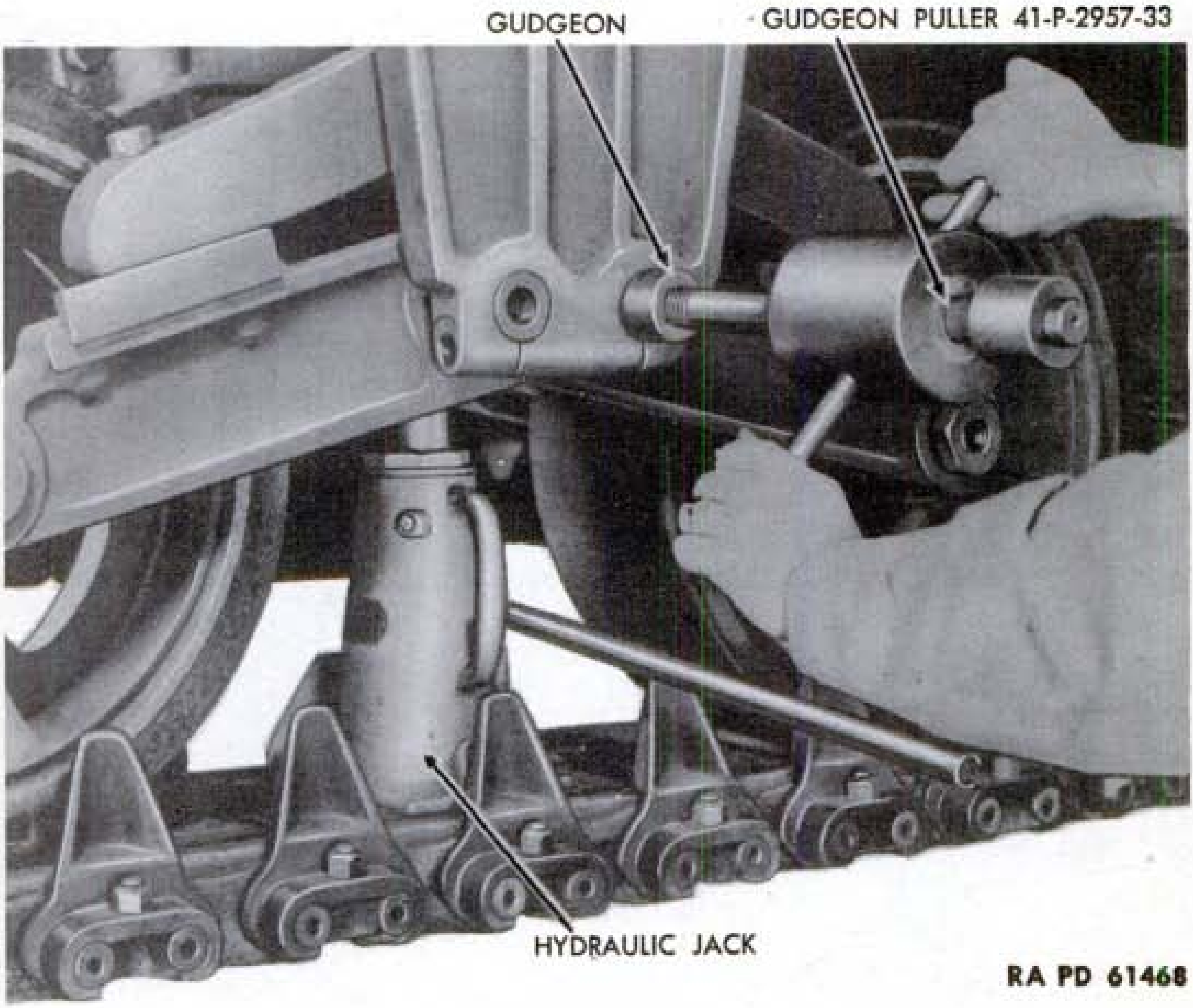

Figure 134—Removing Gudgeon (Early Type Bogie)

b. Removal of Volute Springs.

(1) Remove Track. Disconnect track (par. 152) and move vehicle to pull track off top of bogie from which volute spring is to be removed.

(2) Install Volute Spring Compressors. The procedure for disassembling both early and late type bogies is practically identical except for removal of bogie arms from the bogie bracket. On earlier

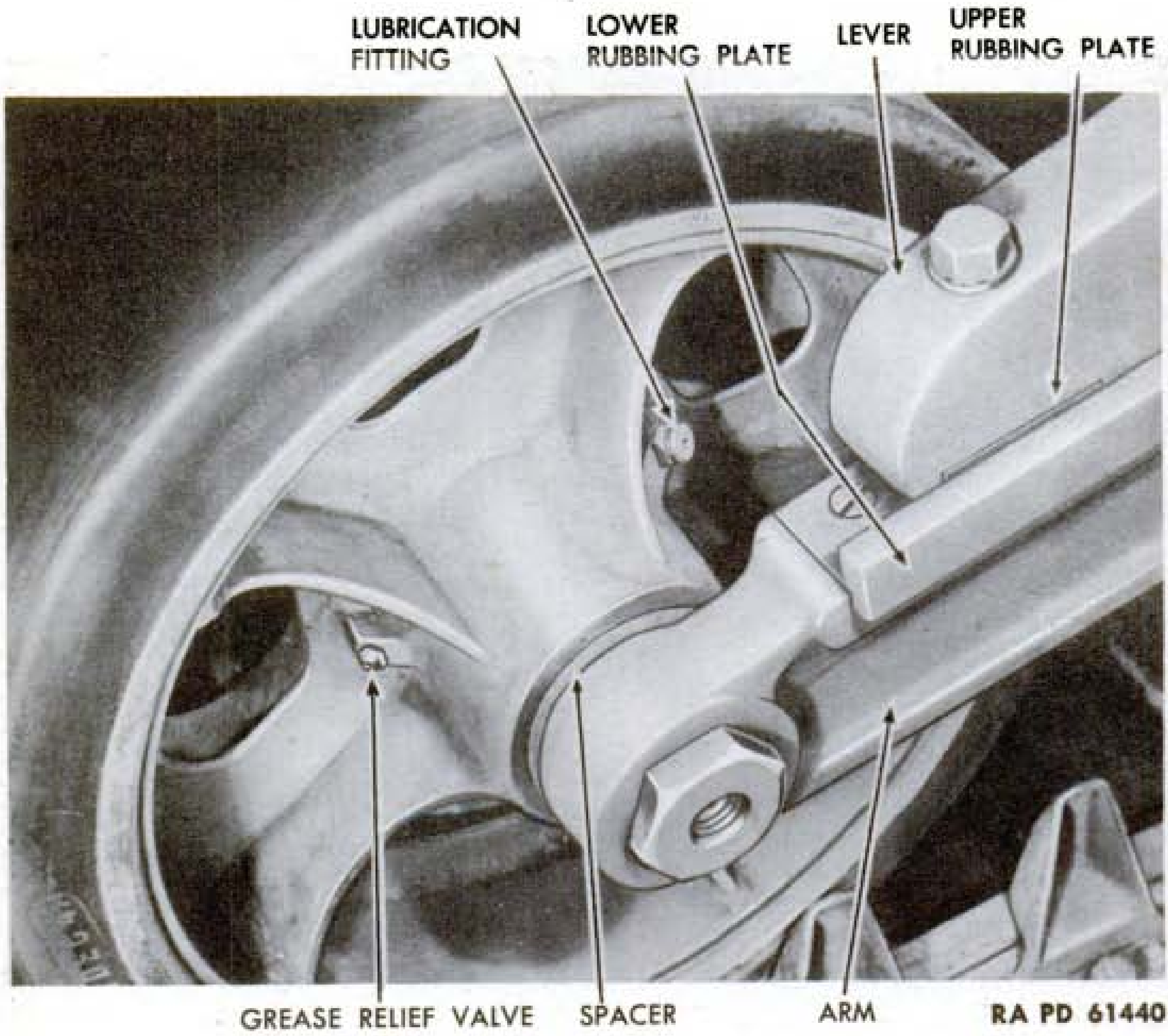

Figure 135—Rubbing Plates on Rocking Lever and Bogie Arm

models, clamping bolts in sides of brackets must be removed to pull gudgeons (fig. 134). Bracket caps on the lower ends of brackets on later type bogie simplify the assembly. Remove locking wire on bolts which attach track skid. Take out bolts and remove skid (fig. 133). On earlier type bogie, remove locking wire and four bolts which attach track support roller shaft and remove roller. Remove two cover plugs (fig. 133) in top of bogie bracket with plug wrench (41-W-1960). Put the two volute spring compressors (41-C-2556) down through the holes in the top of bogie bracket, and screw all the way into the threaded holes in the spring seat, backing off nuts on compressors as necessary. Use spring compressor box socket wrench (41-W-640-200) and turn the compressor nuts to pull the compressors up until there is slight clearance between the rubbing plates on the rocking levers and the rubbing plates on the bogie arms.

(3) DISCONNECT BOGIE ARMS. Straighten lugs on bogie bracket cap nut locks. Remove the six nuts and the two caps which will release the gudgeons that attach inner ends of bogie arms to bracket. Support two arms on each side with crowbars when removing bolts. Drive out gudgeon pin, removing thrust plates and spacers.

(4) REMOVE VOLUTE SPRINGS. Position a 12-ton jack under outer edge of hull in back of bogie and lift side of vehicle until the other four bogie wheels are several inches above track. Place a 5-ton jack under spring seat and raise seat until nuts on spring compressors start to raise. Screw the compressor nuts up to the top of the thread. Lower the jack until the volute springs are fully extended and remove seat, rocking levers and volute springs.

c. Inspection of Bogie Parts. Inspect spring seat rocking lever trunnions and if worn replace spring seat (fig. 136). If bushings in rocking levers are worn, replace the levers. If levers are to be reinstalled, examine rubbing plates. Replace plates if broken or badly worn. Inspect spring seat rings on spring pins on lower spring seat and replace if worn. Clean and inspect bogie arms for cracks and worn bushings. If unserviceable, replace arms. If arms are to be reinstalled, inspect rubbing plates, replacing plates if broken or badly worn. If bolts cannot be held from turning, chisel the nuts off. Inspect gudgeons and thrust plates for wear and replace if necessary. Carefully inspect bogie bracket inside and out, and if damaged, notify higher authority. If inspection of volute spring when installed (par. 148 **f** (2)) indicated that volute springs were weak, replace the pair. Otherwise inspect springs to see if they are broken or cracked. Also place springs side by side on level surface to compare lengths. Variation in length shows the shorter spring has taken a permanent set and both springs must be replaced. Inspect support roller and bearings and bracket. If bearings are worn, replace the track support roller assembly. If bracket is damaged, replace it (par. 161 **b**).

d. Installation of Volute Springs.

(1) ASSEMBLE ROCKING LEVERS AND SPRING SEAT. Place one spring seat ring on each of the two pins on spring seat (fig. 136). Position one rocking lever so that it rests on the lowered inner bogie arms. Assemble spring seat and other rocking lever. Do not use grease on trunnions. Position the two volute springs on the seat. Lift assembly from both sides and position 5-ton jack under spring seat. While the assembly is being steadied and guided, put the two spring compressors (41-C-2556) down through the holes in top of bogie bracket and screw them all the way into the threaded holes in the spring seat.

(2) COMPRESS VOLUTE SPRINGS. Raise jack to compress springs. As springs are being compressed, turn nuts on compressors with wrench (41-W-640-200) until they are at lower ends of threads and hold springs in fully compressed position. Lower and remove jack.

(3) ASSEMBLE BOGIE ARMS. Start one gudgeon through hole in outer arms, place spacer on gudgeon and push it into hole in inner arm (fig. 136). In like manner, assemble the other gudgeon pin and spacer. Place a thrust plate on each end of the two bogie arm

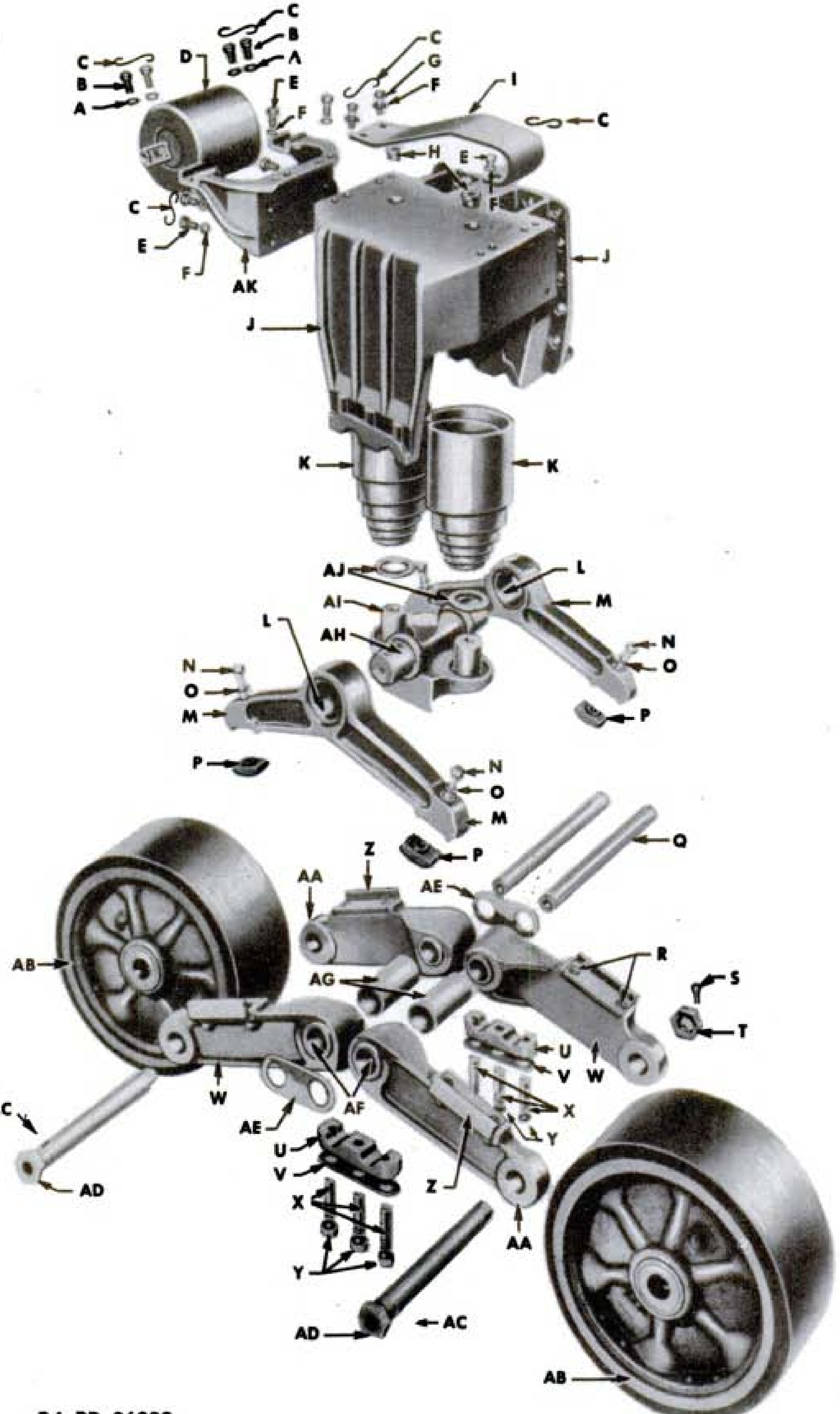

RA PD 36232

Figure 136—Bogie Parts

gudgeons. Raise the arms into position and place a 5-ton jack under spacers for support. Rotate gudgeons so the notches in the gudgeons engage the studs. Raise the assembly until gudgeons seat in the ends of the bogie bracket and install caps, using new cap locks (fig. 136). Tighten nuts and bend lugs on locks against flats on nuts to hold them from turning.

(4) COMPLETE THE ASSEMBLY. Lower and remove the 12-ton jack supporting the vehicle. Unscrew nuts while holding compressors with wrench to release springs evenly. Remove the two compressors. Install and tighten the two plugs in holes in top of bogie bracket. Install the track support roller (par. 161 **d**) if removed. Install the track skid, and tighten bolts. Safety wire all bolts with heads drilled for locking wire. Install track (par. 155). Adjust track tension (par. 150).

161. TRACK SUPPORT ROLLERS.

a. Description. The center section of each track is supported and guided by three track support rollers. One support roller is mounted on each bogie. On earlier models, the rollers were mounted on top of bogie brackets (fig. 137). On later vehicles the support rollers are mounted in a bracket bolted to rear side of the bogie (fig. 133).

b. Removal of Track Support Roller or Bracket. On later type bogies, if track support roller bracket is to be removed, remove bracket and roller assembly. Remove locking wire and bracket bolts, and remove bracket. To remove roller on earlier type bogies, remove locking wires and bolts. On later type bogies, remove safety nuts and roller shaft bolts. Hold track up to provide clearance for roller. Use crowbar and block or blocking and jacks, loosening track tension (par. 150) if necessary and remove roller.

A—LOCK WASHER
B—BOLT
C—LOCKING WIRE
D—TRACK SUPPORT ROLLER
E—BOLT
F—LOCK WASHER
G—BOLT
H—PIPE PLUG
I—TRACK SKID
J—BOGIE BRACKET
K—VOLUTE SPRING
L—BOGIE LEVER BUSHING
M—BOGIE LEVER
N—BOLT
O—LOCK WASHER
P—UPPER RUBBING PLATE
Q—BOGIE ARM GUDGEON
R—SCREW
S—COTTER PIN
T—NUT
U—BOGIE BRACKET CAP
V—BOGIE BRACKET CAP STUD LOCK
W—BOGIE ARM
X—STUDS
Y—NUTS
Z—LOWER RUBBING PLATE
AA—BOGIE ARM
AB—BOGIE WHEEL
AC—WOODRUFF KEY
AD—BOGIE WHEEL GUDGEON
AE—THRUST PLATE
AF—ARM GUDGEON BUSHINGS
AG—SPACERS
AH—SPRING SEAT TRUNNION
AI—VOLUTE SPRING SEAT
AJ—VOLUTE SPRING SEAT RING
AK—TRACK SUPPORT ROLLER BRACKET

RA PD 86232B

Legend for Figure 136—Bogie Parts

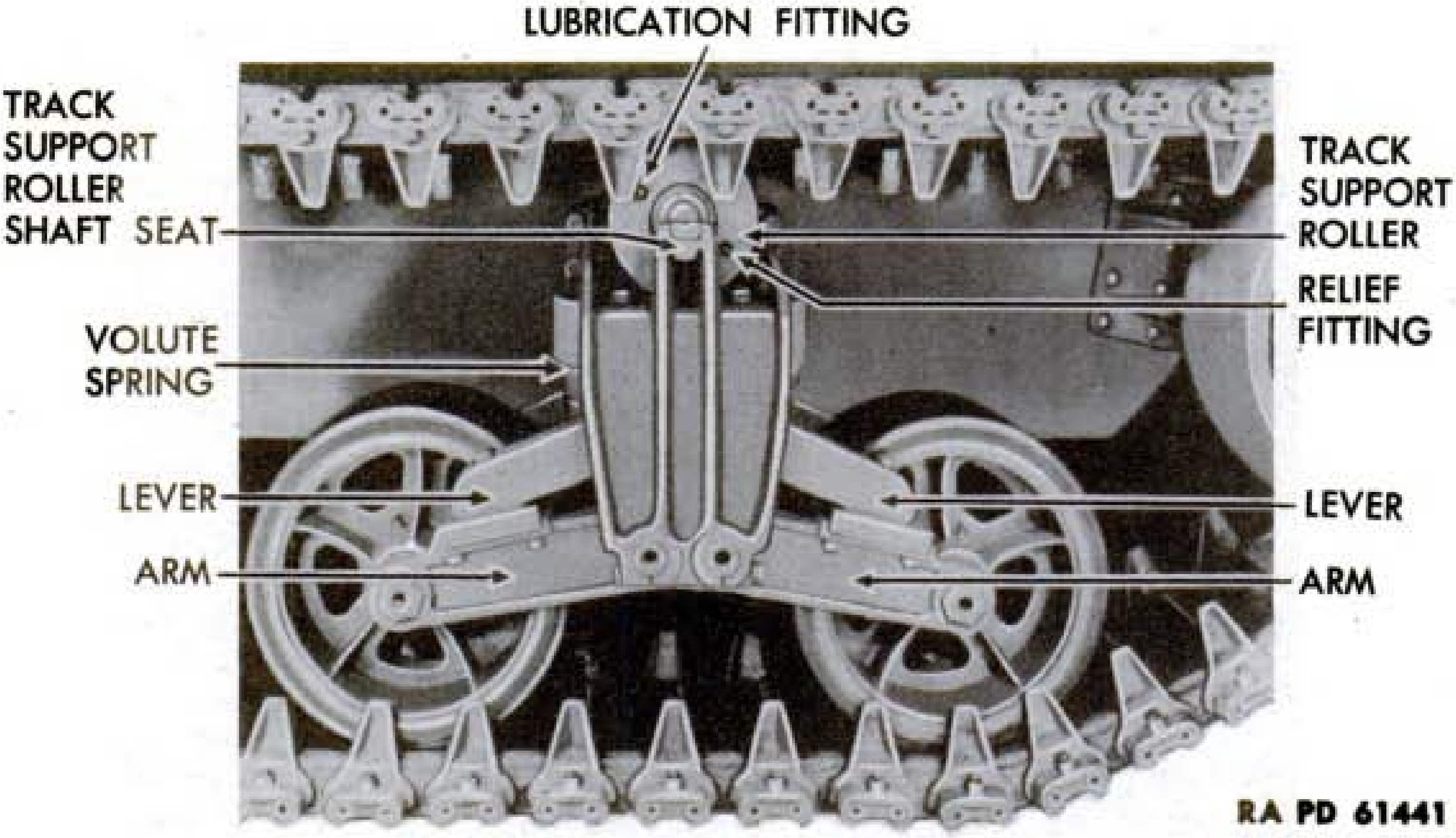

Figure 137—Bogie Assembly (Early Type)

c. Inspection of Track Support Roller. If bearings or roller are damaged, replace the track support roller as an assembly complete with shaft and bearings (fig. 136). If roller is serviceable and only the bracket is to be replaced, inspect lubrication fitting and relief fitting and install new ones if necessary.

d. Installation of Track Support Roller. Install track support roller and bracket assembly or support roller by reversing the removal procedure. Use lock washers on bracket nuts. Tighten and safety wire the bolts. Use new safety nuts on support roller shaft bolts. See that roller turns freely and lubricate bearings with general purpose grease until grease starts coming out relief fitting. Adjust track tension if necessary (par. 150 **b**).

162. GROUSERS.

a. Description. A set of 26 grousers or demountable metal cleats are provided with vehicles equipped with rubber tracks. The grousers are carried on racks (fig. 5) on the upper hull side plate. The grousers are used to provide additional traction on mud, sand, snow or on ice. Ten grousers are usually installed, one between every seventh and eighth link on each track. When necessary to climb over an obstacle or out of a mud hole, the grousers can be grouped closer together on either track. The other six grousers are used for emergencies or replacements.

b. Installation of Grousers. Remove safety nuts on end plate, and lift grouser off rack. Clean out the holes in both ends of the link pins. Place grouser across track between links (fig. 138) at front of

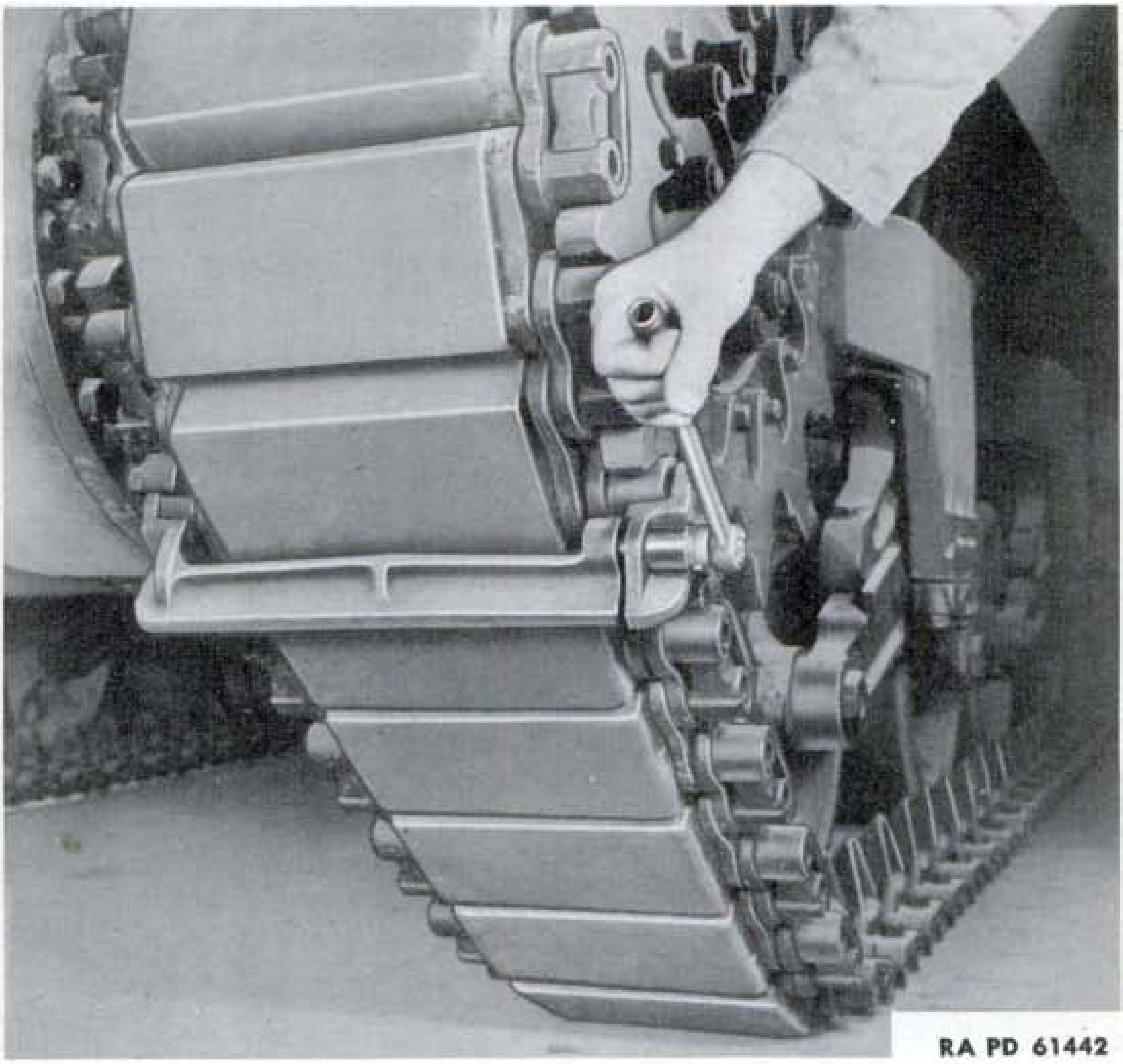

Figure 138—Installing Grouser

vehicle and insert pins on end of grouser into holes in inner end of track link pins. Install grouser end plate so pins are entered into holes in outer end of track link pins, and install safety nuts and tighten securely.

c. **Removal of Grousers.** Take off the two safety nuts. Tap off end plate, and remove grouser. Inspect grousers for wear or damage and replace as required. Examine safety nuts and if they are no longer serviceable, replace them. Hang grousers on stowage rack by inserting end pins in holes in rack. Install the end plates on lower ends of grousers, and tighten nuts.

Section XXII

HULL AND TURRET

163. HULL.

a. Description. The hull is constructed entirely of armor plate. Plates of various thicknesses to form the floor, sides and deck are arc-welded into a rigid one-piece structure. The hull serves both as the frame and body of the vehicle. The brackets for the bogies, or suspension units, are bolted to the hull sides and floor (fig. 124). The differential or power train housing, bolted into the opening in the front, forms the lower front portion of the hull (fig. 1).

164. DRIVER'S DOOR.

a. Removal and Installation of Driver's Door. If driver's door is to be removed for repairs and hinge is not damaged, remove cotter pin and drive out hinge pin (fig. 22). Otherwise, take out bolts and remove hinge and door as an assembly. Lubricate hinge pin before installing, and insert with head of pin toward the turret.

165. FENDERS.

a. Description. The sheet metal fenders over the drive sprockets on each side of the vehicle keep mud or dirt from being thrown up onto the vehicle by the tracks (fig. 1). The front section of the fender is hinged so it can be raised out of the way when removing the track.

b. To Raise or Lower Front Section of Fender. From underneath, at the inner side of fender, loosen the bolt at the lower rear corner of the front section. Loosen the two bolts at center of the outer side of the fender, and raise front section. To lower the front section, first make sure the lock washers are against heads of bolts, then lower front section into position. Tighten the three bolts previously loosened.

c. Removal of Fender. Raise front section of fender (par. 165 **b**). From beneath and inside the fender remove the two long bolts which attach rear section of fender to the differential housing. Also remove two short bolts from rear upper corner which attach fender to hull side plate. Next remove the three bolts from the hull deflector plate. Support fender and, from below, hold screws and remove safety nuts on top of fender at rear edge. Lift off fender.

d. Installation of Fender. Place fender in position with front section raised, and insert the two outer screws at rear edge from below. Install but do not tighten safety nuts. Install the two long bolts, with lock washers, in the differential housing. Install the two short bolts, with lock washers, at upper rear inner corner and tighten bolts. Install the two remaining bolts and safety nuts in upper rear edge and the three bolts, flat washers, and nuts which attach fender to deflector plate. Shift fender to aline it with hull, and tighten all bolts. Complete the installation by reversing the remainder of the removal procedure (par. 165 **b**).

166. TOWING SHACKLES.

a. A towing shackle must be removed in order to attach a towing cable. When removing a front towing shackle with cotter pins in both ends of shackle pin, remove outer cotter pin and drive the shackle pin toward center (fig. 1). On later vehicles, a quickly removable spring retainer pin is used on one end of shackle pin.

167. ENGINE COMPARTMENT DOORS AND COVER PLATES.

a. To Open Engine Compartment Doors. Traverse turret to clear doors (fig. 3). See that all filler opening covers are closed. Remove the bolts in the front and rear inner corners of each door. Lift door with handle. Doors always must be lowered slowly to avoid injury to personnel.

b. To Close and Bolt Engine Compartment Doors. Raise doors to vertical position, and lower slowly into closed position. Install bolt in each front and rear corner of each door and tighten bolts.

c. Remove Engine Compartment Doors and Side Cover Plates. Traverse the turret to clear doors and side cover plates. Remove the bolts in the front and rear inner corners of each door. Remove all the bolts along the front, side, and rear edges of the side cover plates. Raise either door and install engine compartment top plate lifting eye bolts (41-B-1586-200), one in each hole in door, and screw nut on each eyebolt. Hoist door and side cover plate off. Remove other door and side plate in similar manner.

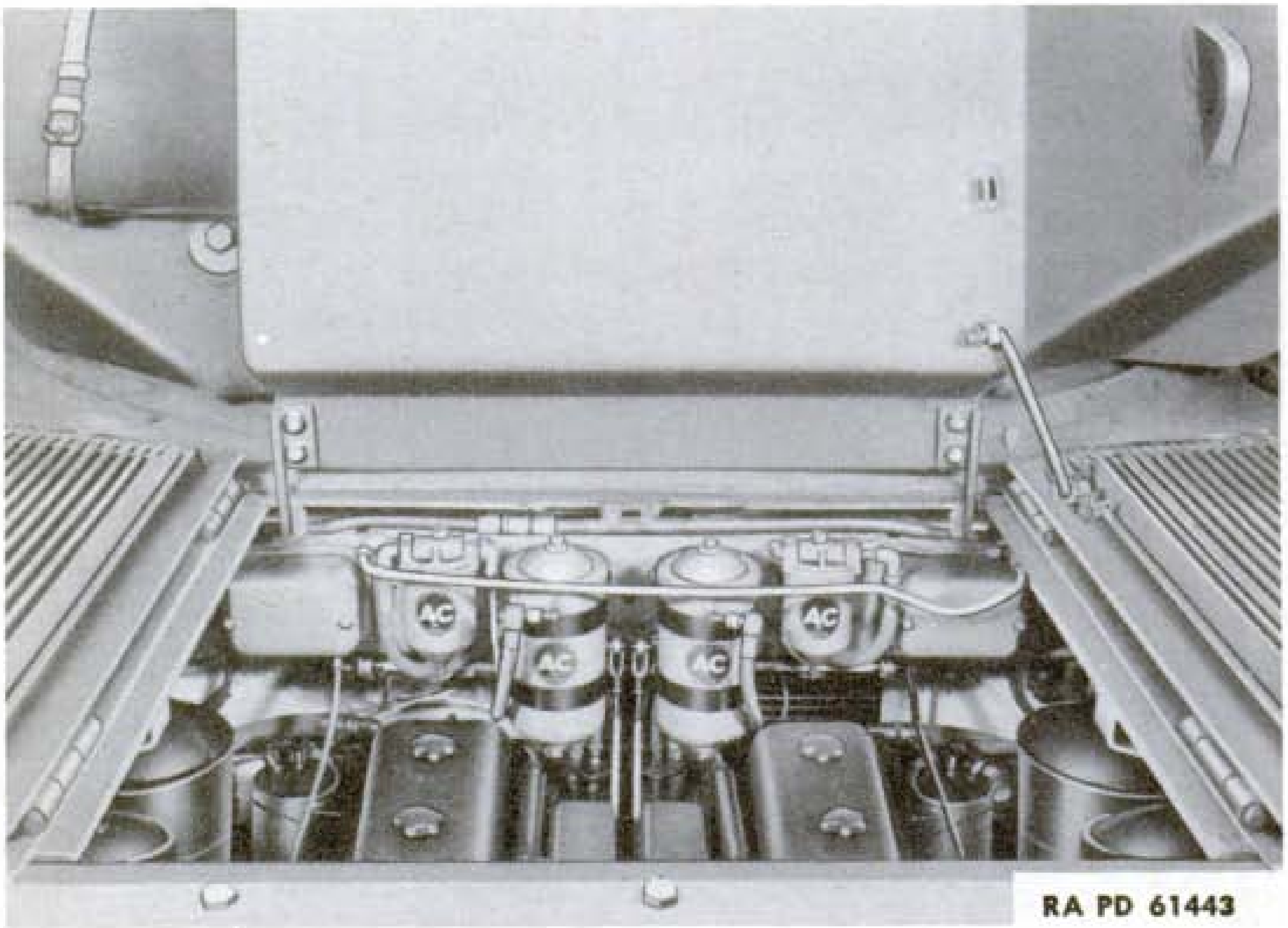

Figure 139—Splash Panel Raised and Locked

d. Install Engine Compartment Doors and Side Cover Plates. Attach one engine compartment top plate lifting eye bolt (41-B-1586-200) in hole in each inner corner of door. Hoist door and side cover plate and lower into position on vehicle. Install side cover plate bolts and tighten. Remove eyebolts, and install other door and cover plate in similar manner. Remove eyebolts, and install a bolt in each front and rear inner corner of each door and tighten bolts.

e. Removal of Engine Compartment Cover Plates as a Unit. Traverse the turret to clear the engine compartment doors. Open engine compartment doors (par. 167 a). Unhook engine compartment splash panel. Close the engine compartment doors, and install only the two bolts in the rear inner corners of the doors. Remove bolts along front edge of each side cover plate. Remove bolts along outer edges of side and rear cover plates. Remove the row of bolts near upper edge of rear hull plate. Remove bolts on top of rear cover plate directly in front of the gun traveling rest. Remove locking pin in each fuel tank filler cover. Attach lifting hook to door handles and hoist covers and doors, as a unit, several inches and block. Install four lifting eyebolts (41-B-1586-200), with nuts, one in each outer front corner of the side cover plates and one in each rear corner of the rear cover plate. Lower hoist and attach lifting hooks (41-H-2584) to the four eyebolts and to hoist, and lift the assembly off the vehicle.

f. Installation of Engine Compartment Cover Plates as a Unit. To install the engine compartment doors and rear cover plate, reverse the removal procedure. After cover plates are bolted in place, remove two bolts from inner rear corners of engine compartment doors. Raise doors and raise and hook the splash panel in position. Close doors and install bolts in the front and rear inner corners and tighten bolts. Make sure all filler cap covers are securely fastened.

168. ENGINE COMPARTMENT SPLASH PANEL.

a. Description. The splash panel is a thick metal shield directly under the engine compartment doors primarily to protect against bullet splash (fig. 164).

b. Raise and Lock Engine Compartment Splash Panel. Unbolt and open engine compartment doors (par. 167 **a**). Unfasten the two hooks at rear of splash panel and raise it into a vertical position. Pull support rod out of retainer clip. Position support rod in hole in bracket on engine compartment door, and insert chained pin into hole in support rod to secure it in bracket (fig. 139).

c. To Lower and Hook Engine Compartment Splash Panel. Remove pin from end of support rod. Pull rod out of bracket, and swing it up into retainer clip (fig. 139). Slowly lower panel into position, and fasten both hooks in brackets at front of rear cover plate. Close and bolt engine compartment doors (par. 167 **b**).

d. Removal of Engine Compartment Splash Panel. Unbolt and raise engine compartment doors (par. 167 **a**). In the splash panel right hinge, remove the bolt closest to front edge of panel and loosen the other bolt (fig. 139). Unfasten hooks, and lower the panel onto rocker arm covers. Using a bar, pry the right hinge pin out of the hull bracket. Slide the panel to the left to release the left hinge, and lift the panel out.

e. Installation of Engine Compartment Splash Panel. Lower the panel onto engine valve rocker covers. Insert left hinge pin into bracket. Hold the panel to line up the right hinge pin with hole in bracket, and pry the bracket into position. Line up hinge bolt hole, install the removed bolt and tighten both hinge bolts. Raise panel, and fasten hooks into brackets at rear. Close and bolt engine compartment doors (par. 167 **b**).

169. SPONSON COVER PLATES.

a. Description. The sponsons on each side in the engine compartment are covered by sponson cover plates. The sponson cover plates are removed for access to the upper fuel tanks and to the wires for the fuel gage tank units and those for the taillights and stop lights.

b. Removal of Sponson Cover Plate. Remove engine compartment doors and rear cover plate (par. 167 **e**). Remove auxiliary water tank (par. 105 **b**). Remove three air cleaners (par. 88 **b**). Drain lower fuel tank to bring level in upper tank below fuel return line elbow (par. 93 **d**). If the upper fuel tank is to be removed, disconnect fire extinguisher tube at the tee connection on bulkhead and at lower rear nozzle. Remove bolt which attaches clip on fire extinguisher tube to sponson cover plate. Take out the two bolts which attach upper rear fire extinguisher nozzle bracket to sponson cover plate and remove tubes, bracket, and nozzle, as an assembly. If the upper fuel tank is not to be removed, disconnect tube to lower rear nozzle at the upper nozzle. Then remove the bracket, nozzle and tube to tee connection on bulkhead as an assembly. Disconnect fuel return line at elbow on upper fuel tank, and remove elbow with nipple. When removing right sponson cover plate, disconnect fuel return line at fuel selector valve and remove the line. When removing the left sponson cover plate, bend the fuel return line slightly inward to clear the cover plate. Loosen upper clamp on lubricating oil tank filler pipe. Loosen filler pipe clamping bolt, remove clamp from sponson cover plate and lift filler pipe out. Cover the filler opening in tank. Remove cover on engine compartment terminal box, and disconnect wires in the conduit which goes through sponson cover plate. Unscrew conduit connector nut, and pull conduit through hole in sponson cover plate. Tag the wires for identification. Remove all bolts which attach sponson cover plate, including the three bolts which attach the fan shroud bracket. Pry the cover plate up, slide it rearward slightly, and lift it out.

c. Installation of Sponson Cover Plate. Install cover plate by reversing the removal procedure. Before installing engine compartment doors and cover plates (par. 167 **f**), run engine and inspect fuel and water connections for leaks.

170. ENGINE COMPARTMENT FLOOR PLATES.

a. Description. The engine compartment floor plates are the two large plates bolted to the underside of the hull to cover the

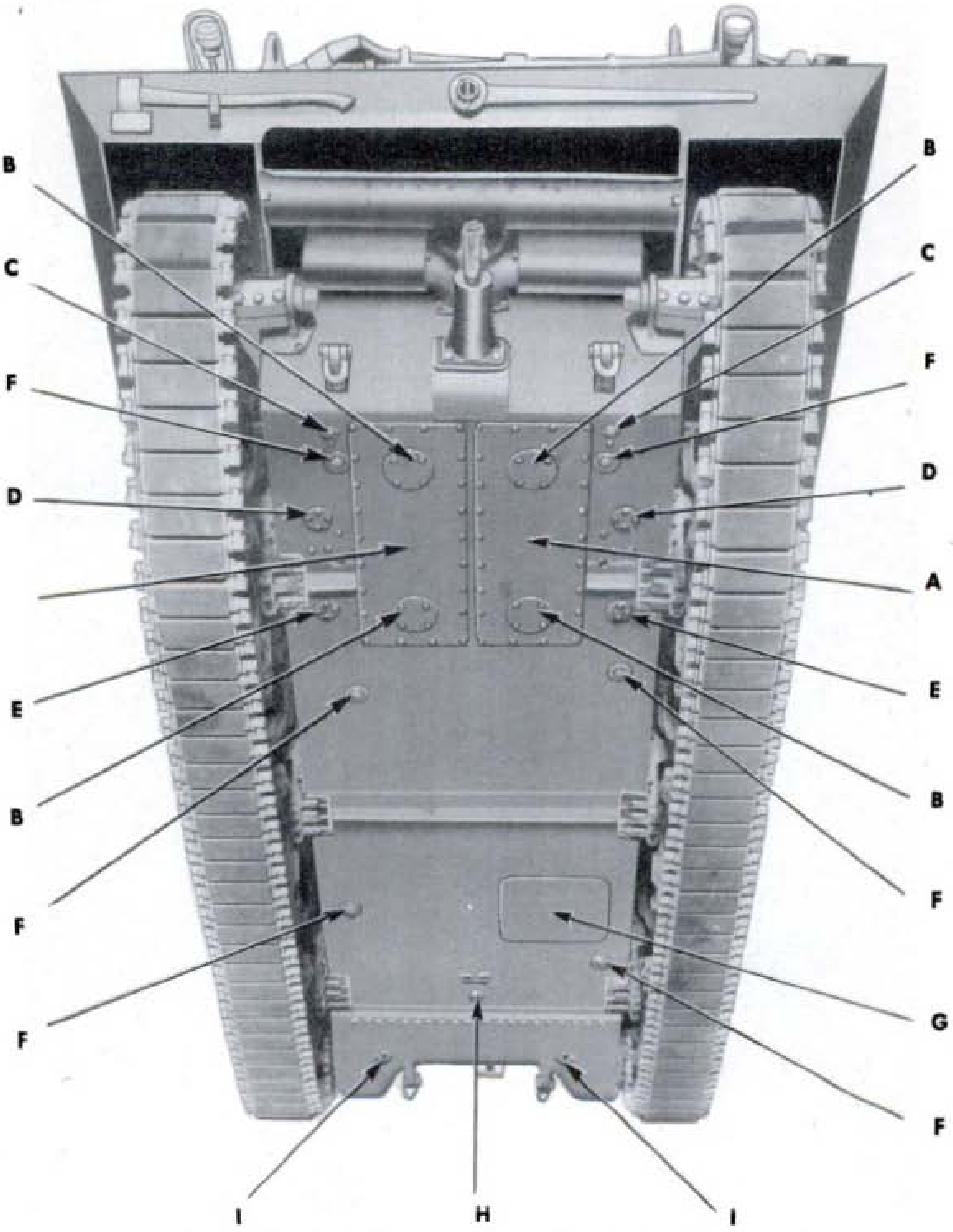

A—ENGINE COMPARTMENT FLOOR PLATES
B—CRANKCASE DRAIN COVER PLATES
C—WATER DRAIN PLUGS
D—LOWER FUEL TANK DRAIN COVER PLATES
E—LUBRICATING OIL TANK DRAIN COVER PLATES
F—HULL DRAIN VALVES
G—ESCAPE HATCH
H—TRANSMISSION DRAIN PLUG
I—DIFFERENTIAL DRAIN PLUGS

RA PD 61444

Figure 140—Underside of Vehicle

access openings in the engine compartment (fig. 140). A gasket is used on each plate to make it watertight.

b. Remove Engine Compartment Floor Plate. Position a roll-away jack under the exact center of the floor plate. Raise the jack to support the plate, and remove the bolts. Operate the jack slowly to lower the plate.

c. Installation of Engine Compartment Floor Plate. If the gasket is damaged, clean surface on plate and bottom of hull, and cement new gasket to plate with non-hardening gasket cement. Oil the floor plate bolts with engine oil. Center the plate on roll-away jack. Roll jack into position, and raise plate into place. Line up bolt holes, and install and tighten bolts.

171. FIGHTING COMPARTMENT FLOOR.

a. Description. The fighting compartment floor is a raised platform behind the driver's and assistant driver's seats. Seven hinged doors in the floor (fig. 33) provide access to the battery box, stowage space and to the clutch idler levers and rear universal joint.

b. Removal and Installation of Doors or Fighting Compartment Floor. To remove the individual doors, take out screws which attach hinges to cross members. To remove cross members, first take out bolts which attach them to the side members. Two cross members are welded to a lengthwise center member, and are removed as an assembly. Before removing the assembly, wires and conduits must be disconnected inside the electrical outlet box and interphone switch box. Cross members and doors are installed by reversing the removal procedure.

172. ESCAPE HATCH.

a. Description. The escape hatch, covering the opening in the hull floor back of the assistant driver's seat, is held in place by four locking bolts (fig. 141). The bolts are operated by the single release handle (par. 172 **a**).

b. Removal of Escape Hatch. To open the escape hatch for such maintenance operations as removing the propeller shaft, position a jack under the exact center of the hatch, pull locking handle into released position and operate jack slowly to lower the hatch.

c. Installation of Escape Hatch. Inspect condition of hatch gasket and replace if unserviceable. Lubricate with engine oil and work the release handle, pawl and bolts to make sure they work freely. Raise hatch into position with jack, or pull into position from inside by the two handles, and turn the locking handle to bolt the hatch securely into position.

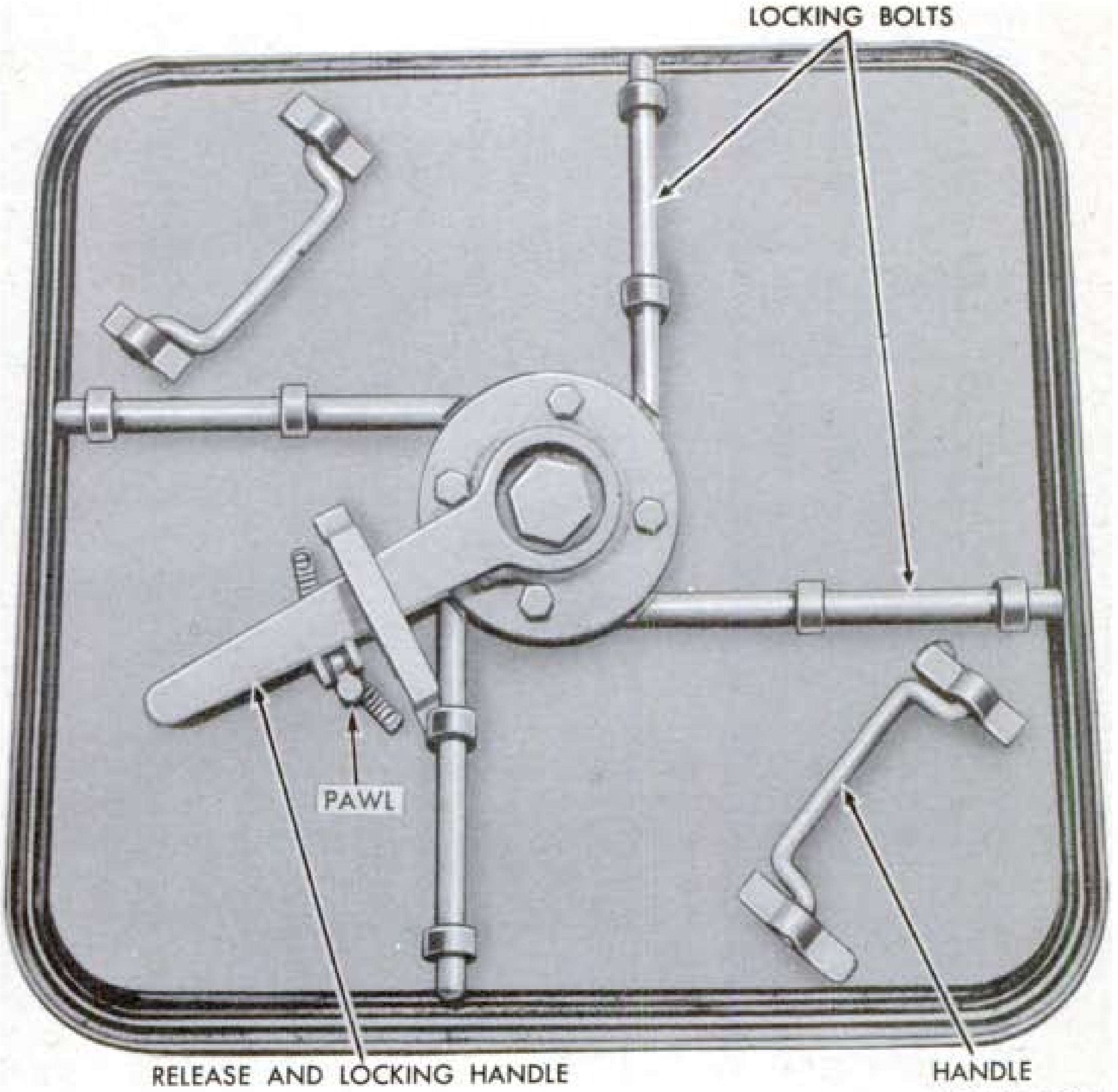

Figure 141—Escape Hatch

173. DRIVERS' SEATS.

a. Description. The driver's and assistant driver's seats are each mounted on two parallel arms which swing up and down on brackets bolted to the sides of the hull (fig. 21). Two extension springs are used on each bracket as a counterbalance. The seats are adjustable up and down, and back and forth (par. 60).

b. Removal and Installation of Drivers' Seats. Remove bolts which attach seat support arm bracket to side of hull. To install seat assembly, bolt the bracket into place. Lubricate working parts with engine oil, also see that latch release levers operate freely.

174. DRIVER'S SEAT FLOOR PLATE.

a. Description. The driver's seat floor plate covers and protects the accelerator and clutch pedal linkage. The steering lever parking brake mechanism is mounted on the top of the plate (fig. 15).

b. Removal of Driver's Seat Floor Plate. On earlier vehicles having transmission parking brake, take out five screws and remove plate. On vehicles with steering lever parking brakes, release the brake levers. Pull the cotter pins and remove spacer and pin which attaches quadrants to front bracket. Remove four bolts that hold front bracket to plate. Remove bolt which attaches oil cooler tube clip. Remove five flat-head floor plate screws. Pull floor plate rearward, and lift off.

c. Install Driver's Seat Floor Plate. Slide floor plate into position. Install and tighten the five flat-head screws and the bolt in transmission oil cooler tube clip. Install the brake quadrant front bracket. Raise quadrants, and line up holes with front bracket. Position spacer between quadrants, and install pin. Insert cotter pins in each end of pin, and spread cotter pin. Raise quadrant rear bracket into position, and install and tighten bolts.

175. DRIVER'S SEAT SUB-FLOOR.

a. Description. The driver's seat sub-floor is bolted to the hull floor beneath the driver's seat floor plate. The accelerator, clutch pedal and steering lever brackets are welded to this sub-floor (fig. 81).

b. Removal of Driver's Seat Sub-floor. Remove driver's seat (par. 173 **b**). Remove the driver's seat floor plate (par. 174 **b**). Remove cotter pins and clevis pins which connect steering lever control rods to actuating lever and cross shaft lever. Disconnect clutch pedal return spring and cylinder rod from clutch pedal (fig. 21). Disconnect accelerator control rod and return springs from accelerator. Take out the bolts which attach the sub-floor, and lift floor out.

c. Installation of Driver's Seat Sub-floor. The sub-floor is installed by reversing the removal procedure. Before the floor plate is installed, lubricate the accelerator, clutch and brake lever linkage. Test operation of clutch and adjust linkage if necessary (par. 116). Install driver's seat floor plate (par. 174 **c**). Install driver's seat (par. 173 **b**).

176. PROTECTIVE PADDING.

a. Protective padding is attached to lower edges of driver's and assistant driver's doors and under the front edge of turret opening (fig. 27). The padding is held in place by bolts.

177. HULL DRAIN VALVES.

a. Description. All six hull drain valves (fig. 140) are poppet type with a compression spring to hold them in closed position. (See paragraph 177 **a**.) The two valves in the drivers' compartment, and the two beneath the fighting compartment floor, can be locked in the open position by turning the knob after valve is pressed down. The valves in the engine compartment floor are operated by remote control handles in generator compartments and cannot be locked open.

b. Removal and Installation of Hull Drain Valve. Hold spring down with screwdriver placed directly below knob. Hold valve up, and drive out tapered pin which attaches knob to valve stem. On the four valves with hold-open feature, next remove latch pin while valve is being held up. To install drain valve, first lubricate valve stem with engine oil, and install and hold valve against seat from beneath vehicle. From above, install latch pin, if used, and position the spring. Place knob on valve stem with the tapered hole in each corresponding. Hold top coil of spring down with screwdriver, and install tapered pin.

178. TURRET.

a. Description (figs. 3 and 6). The turret is built by welding heavy sections of armor plate together. It is mounted on the top of the hull, and traverses on a ball race which minimizes friction. The turret is rotated by means of a hand traversing mechanism. The gun mount is attached to two large vertical members welded into the front of the turret.

179. TURRET COUNTERWEIGHTS.

a. Description. Two large cast counterweights are bolted to the outside of the turret at the rear (fig. 5). Their purpose is to reduce the effort required to traverse the turret by counterbalancing the weight of the gun and gun mount when the vehicle is not on level ground.

b. Tightening Counterweights. When the vehicle is in operation all counterweight bolts must be tightened daily to make sure they are not loose.

180. TURRET TRAVERSING MECHANISM.

a. Description. The turret handwheel is mounted on one end of a shaft with an integral worm on the other end. The worm engages the teeth in a vertically mounted pinion which is meshed with the turret ring gear (fig. 184).

b. Removal of Turret Traversing Mechanism. Engage both turret locks. Straighten lugs on handwheel nut locking washer and remove nut (fig. 184). Pull handwheel off shaft, and remove key in shaft. Remove four bolts which attach the traversing mechanism to turret rim, and remove turret traversing mechanism.

c. Installation of Turret Traversing Mechanism. Install the traversing mechanism by reversing the removal procedure, using lock washers on the bolts. Install the handwheel with knob on side opposite traversing mechanism. Use a new lock washer under the handwheel nut. Tighten the nut, and bend lugs on lock washer against flats on nuts.

181. TURRET LOCKS.

a. Description. The two turret locks are used to lock the turret when it is not being traversed, and relieve strain on the traversing mechanism (figs. 184 and 185). Turning the handle on a lock turns an eccentric pin which fits into a hole in the sliding pawl, and engages four teeth on the pawl with the turret ring gear. A spring clip holds the handle in locked position and a spring-loaded, ball-type detent holds the handle in unlocked position.

b. Removal of Turret Lock. Remove four bolts, and pry the lock off the dowel pin.

c. Installation of Turret Lock. Before installing a turret lock, engage the other lock and work the traversing handwheel to equalize the lash or clearance between the pawl teeth of the engaged lock and the turret ring gear. Traverse the turret to the right to take up all lash, and insert a reference line on top of ring gear at left side of bracket with a scriber or knife blade. Traverse turret to left to take up all lash, and scribe a mark on top of ring gear at right side of bracket. Then traverse the turret to space each mark the same distance from side of bracket. Install the other turret lock. Install four bolts with lock washers, fully engage the lock, and tighten two diagonally opposite bolts lightly (fig. 185). Use the same marking procedure for this lock as used on the other but instead of traversing the turret in both directions to mark the lash, move lock by tapping lightly with a hammer. Tap lock all the way to the left and place mark on right side. Tap lock to right, and mark left side. Then center the lock and tighten all bolts and mark ring gear at each side of bracket with scriber to indicate its centered location. Release both turret locks, and completely traverse the turret to test for high spots on turret ring gear. If the gear rubs the bracket at any point, remove the lock and shim as required between bracket and rim on turret. Reinstall lock, using the locating marks previously made. This procedure must be followed to insure the easy engagement of both locking pawls.

182. TURRET SEATS.

a. Description. Three hinged seats are attached to the turret rim (fig. 184), for the gunner, commander and loader.

b. Removal and Installation of Turret Seat. To remove the turret seat, take out the two bolts which attach the seat to the turret rim and lift off seat. To install the seat, place it in position and install the two bolts, with lock washers, and tighten bolts. Lubricate hinge and lock plunger with engine oil (fig. 185).

183. TURRET CANOPY AND SUPPORTS.

a. Six hinged supports at the top of the turret (fig. 3) are used to attach a canopy over the turret to protect the crew from sun or rain. If the supports become bent or damaged, they can be replaced by removing the hinge pins from the brackets welded to the turret.

Section XXIII

ELECTRICAL SYSTEM AND INSTRUMENTS

184. ELECTRICAL SYSTEM.

a. Description. The electrical system is a 24-volt single wire type. This current is supplied by two 12-volt, series connected storage batteries. The generating system consists of two 24-volt, 50-ampere generators, one on each engine, and two generator regulators to control the output of the generators. The lighting system, starters, and siren operate on 24 volts. The air-heater ignition systems, the emergency stop valve solonoids, the firing mechanism for the 3-inch gun, and the radio and interphone system all operate on 12 volts. Current for the 6-volt blackout driving light is supplied through a resistance unit off the 24-volt system. Wiring is shielded by metal conduit to eliminate radio interference. Electrical outlets for firing mechanism on the 3-inch gun, for radio and interphone system, and for inspection light are also shielded. All electric units and lights are 24-volt type except the 12-volt engine air heaters and emergency stop solenoids to which current is supplied by only one 12-volt battery. The radio and interphone system also operate on 12 volts. Current for the 6-volt blackout driving light is supplied through a 24- to 6-volt resistance unit.

185. WIRING DIAGRAMS.

a. Description. The various electrical units and the wires which comprise the various systems and circuits can be easily identified by reference to the eight wiring diagrams contained in this section. The schematic diagram (fig. 142) shows the approximate location of all the electrical units with the wiring systems or conduits which connect them. The vehicle electrical system is divided into seven major circuits for convenience in locating and identifying the wires and units of each major circuit as follows: Starting and Generating Circuits (fig. 143); Lighting Circuits (fig. 144); Siren, Oil Pressure Switches, Tank Gages and Air Heater Circuits (fig. 145); Gun Firing and Radio Circuits (fig. 146); Battery Box Circuits (fig. 147), and Master Switch Box Circuits (fig. 148).

b. Identification Symbols. Each wiring system or conduit is identified by a key symbol which indicates its location as follows: Battery Box–BB; Engine Compartment–E; Filter Panel–FP; Gun Firing–G; Hull–H; Master Switch Box–MS; Instrument Panel–P;

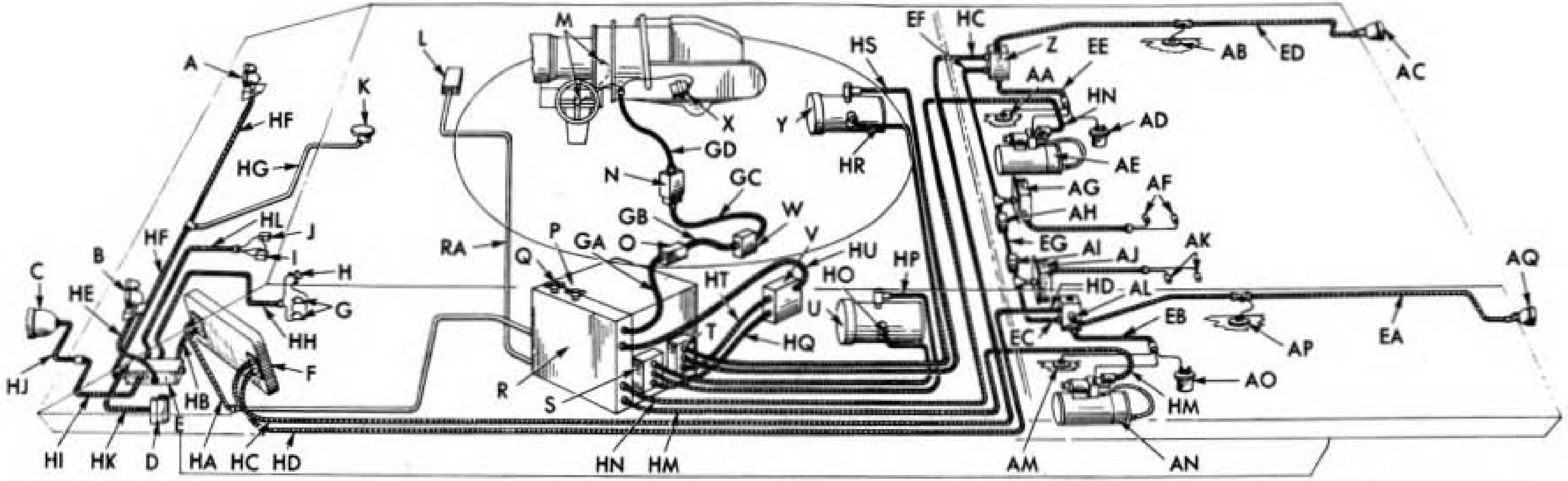

A—RIGHT HEADLIGHT
B—LEFT HEADLIGHT
C—SIREN
D—BLACKOUT DRIVING LIGHT RESISTOR BOX
E—HULL TERMINAL BOX
F—INSTRUMENT PANEL
G—STOPLIGHT SWITCHES
H—SIREN SWITCH
I—LC OIL PRESSURE MICRO SWITCH
J—LA OIL PRESSURE MICRO SWITCH
K—DOMELIGHT
L—RADIO TERMINAL BOX
M—GUN FIRING SWITCHES
N—TURRET INTERPHONE CONTROL BOX BRACKET
O—GUN FIRING CIRCUIT BREAKER BOX
P—RADIO MASTER SWITCH
Q—BATTERY MASTER SWITCH
R—BATTERY BOX
S—LC GENERATOR REGULATOR
T—LA GENERATOR REGULATOR
U—LC GENERATOR
V—GENERATOR RADIO FILTER BOX
W—GUN FIRING RELAY BOX
X—GUN FIRING SOLENOID
Y—LA GENERATOR
Z—LA ENGINE TERMINAL BOX
AA—RIGHT LUBRICATING OIL TANK GAGE UNIT
AB—RIGHT UPPER FUEL TANK GAGE UNIT
AC—RIGHT TAILLIGHT
AD—LA EMERGENCY STOP SOLENOID
AE—LA STARTER
AF—LA AIR HEATER ELECTRODES
AG—LA AIR HEATER IGNITION COILS
AH—LA AUXILIARY STARTER SWITCH
AI—LC AUXILIARY STARTER SWITCH
AJ—LC AIR HEATER IGNITION COILS
AK—LC AIR HEATER ELECTRODES
AL—LC ENGINE TERMINAL BOX
AM—LEFT LUBRICATING OIL TANK GAGE UNIT
AN—LC STARTER
AO—LC EMERGENCY STOP SOLENOID
AP—LEFT UPPER FUEL TANK GAGE UNIT
AQ—LEFT TAILLIGHT

RA PD 61445

Figure 142—Vehicle Wiring Diagram

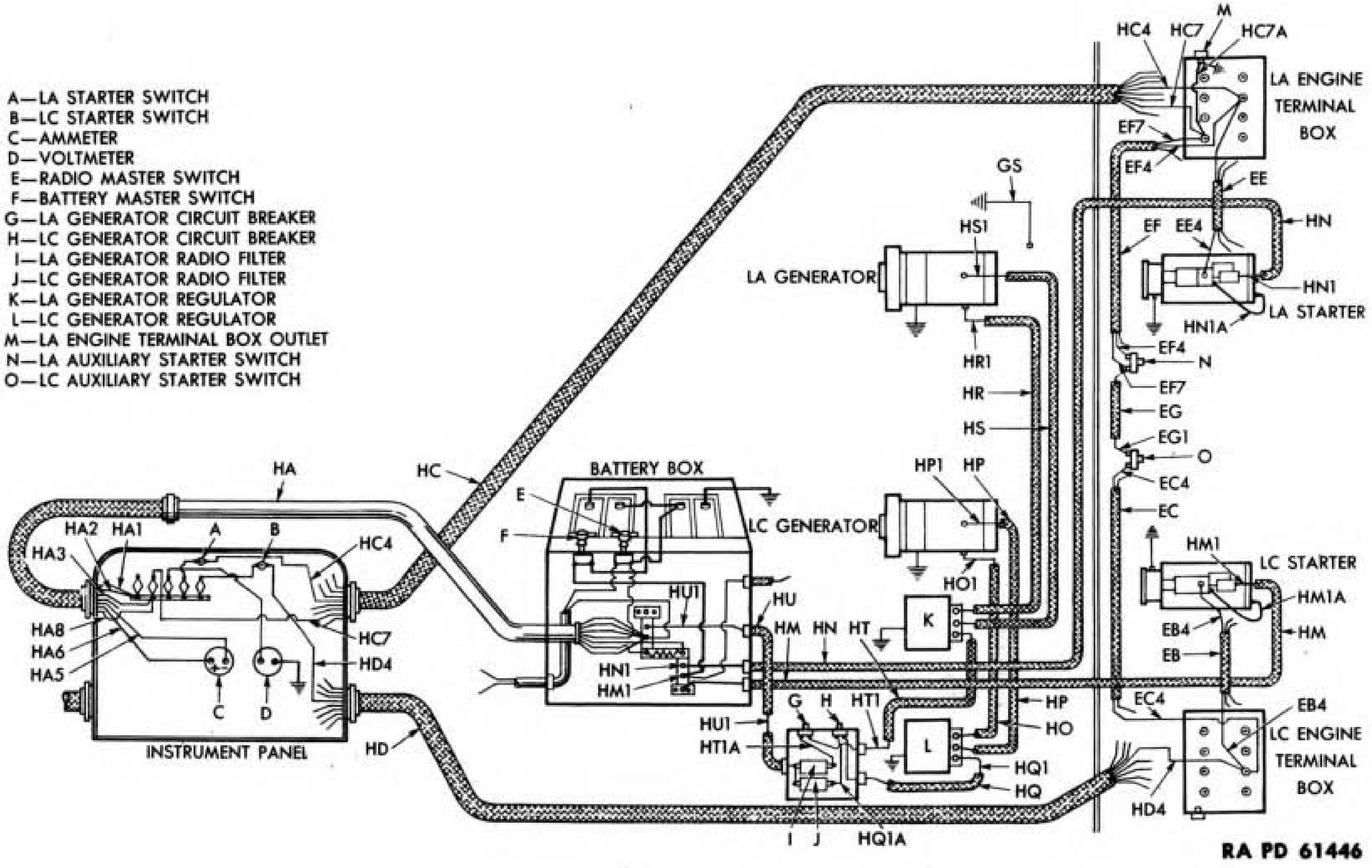

A—LA STARTER SWITCH
B—LC STARTER SWITCH
C—AMMETER
D—VOLTMETER
E—RADIO MASTER SWITCH
F—BATTERY MASTER SWITCH
G—LA GENERATOR CIRCUIT BREAKER
H—LC GENERATOR CIRCUIT BREAKER
I—LA GENERATOR RADIO FILTER
J—LC GENERATOR RADIO FILTER
K—LA GENERATOR REGULATOR
L—LC GENERATOR REGULATOR
M—LA ENGINE TERMINAL BOX OUTLET
N—LA AUXILIARY STARTER SWITCH
O—LC AUXILIARY STARTER SWITCH

Figure 143—Starting and Generating Circuits Diagram

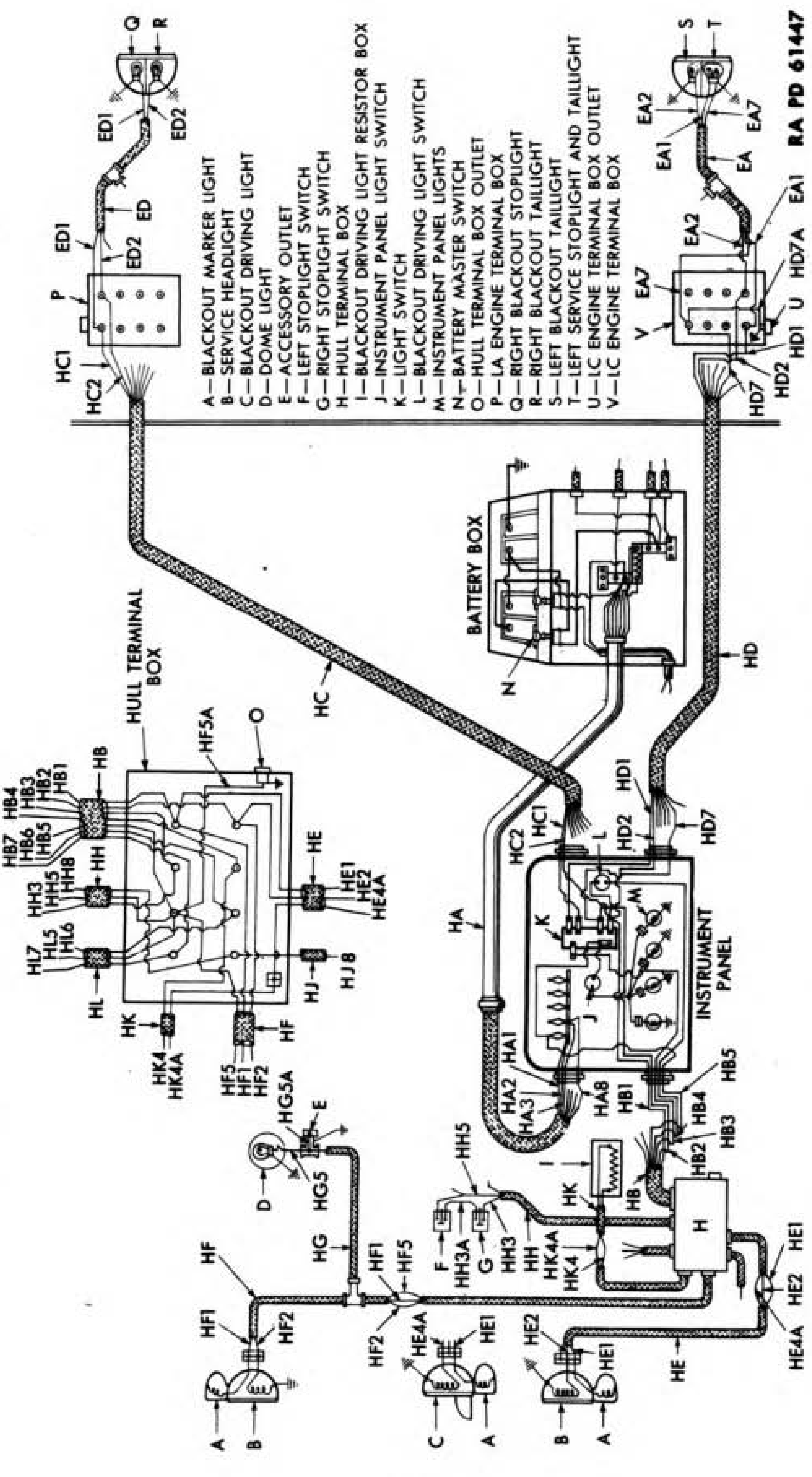

Figure 144—Lighting Circuits Diagram

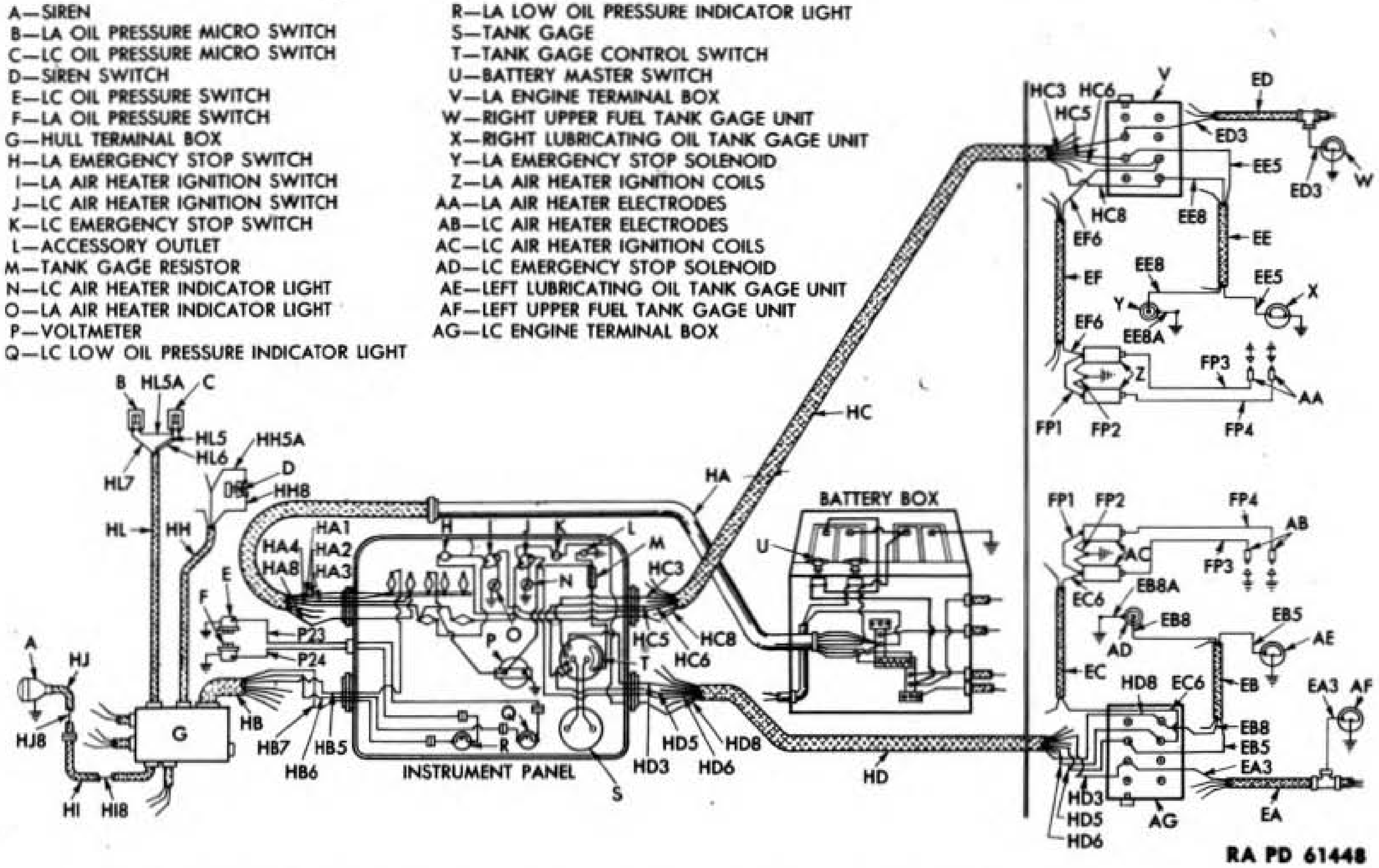

Figure 145—Siren, Oil Pressure Switches, Tank Gages and Air Heater Circuits Diagram

3-INCH GUN MOTOR CARRIAGE M10

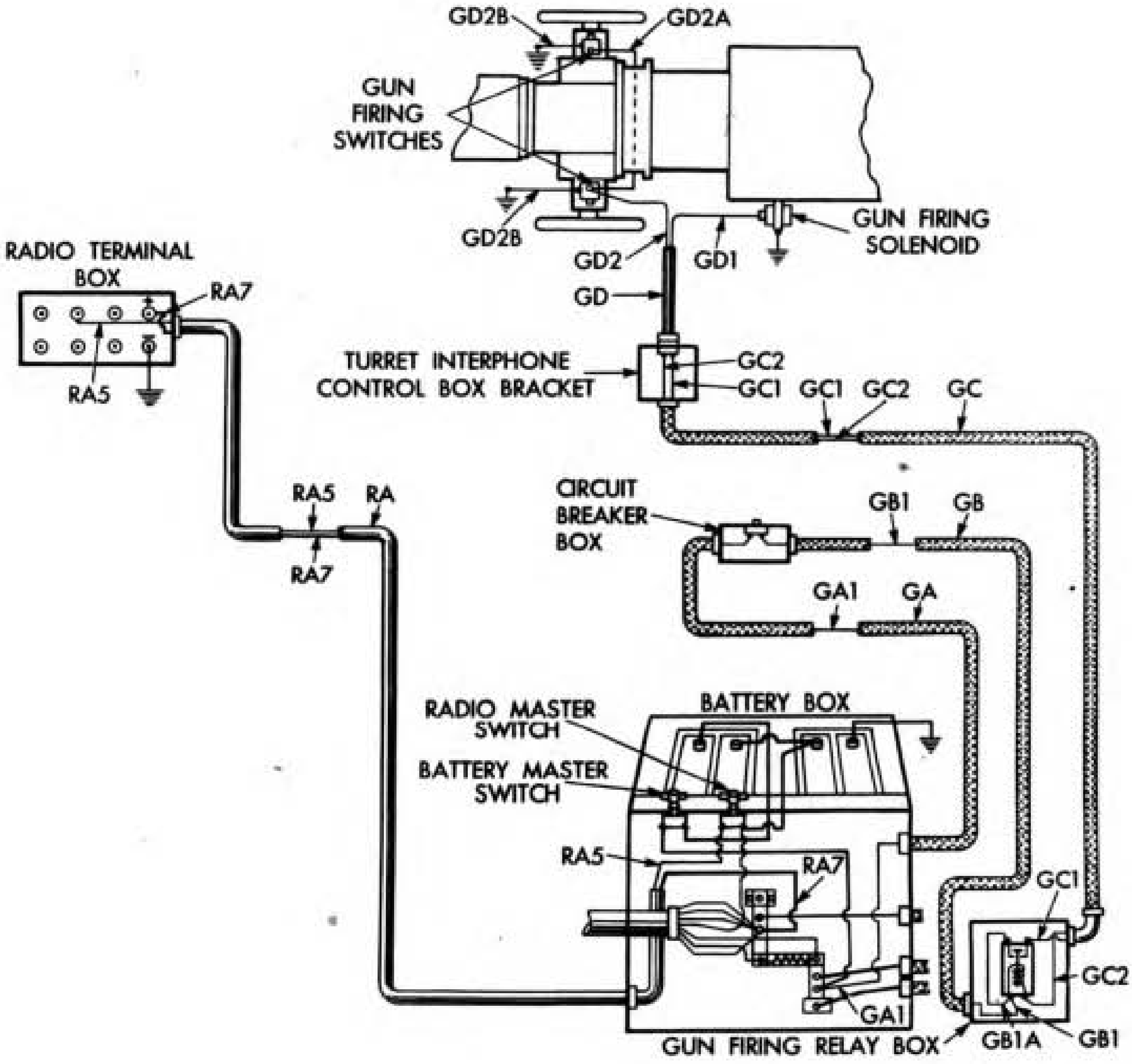

RA PD 61449

Figure 146—Gun Firing and Radio Circuits Diagram

Radio—R. The individual wires in each system are identified by the key symbol of the system followed by a numeral. The same numeral is used to identify all wires which are a part of the same circuit as they pass through the various conduits, terminal boxes and electrical units. In some few instances, where a lead wire or auxiliary wire is part of the circuit, the lead wire is identified by the same symbol as the wire supplying the current, with a letter added. For example, refer to figure 146. Current flows from the battery to the circuit breaker through wire GA1 and from the circuit breaker to the relay switch through wire GB1. A lead GB1A is connected to the solenoid side of the switch. When the relay closes, current flows to the solenoid through wire GC1 which is connected to wire GD1 at the plug in the interphone bracket.

c. List of Wiring Systems and Wires. The wiring systems, with the wires in that system and individual wires, are listed by their

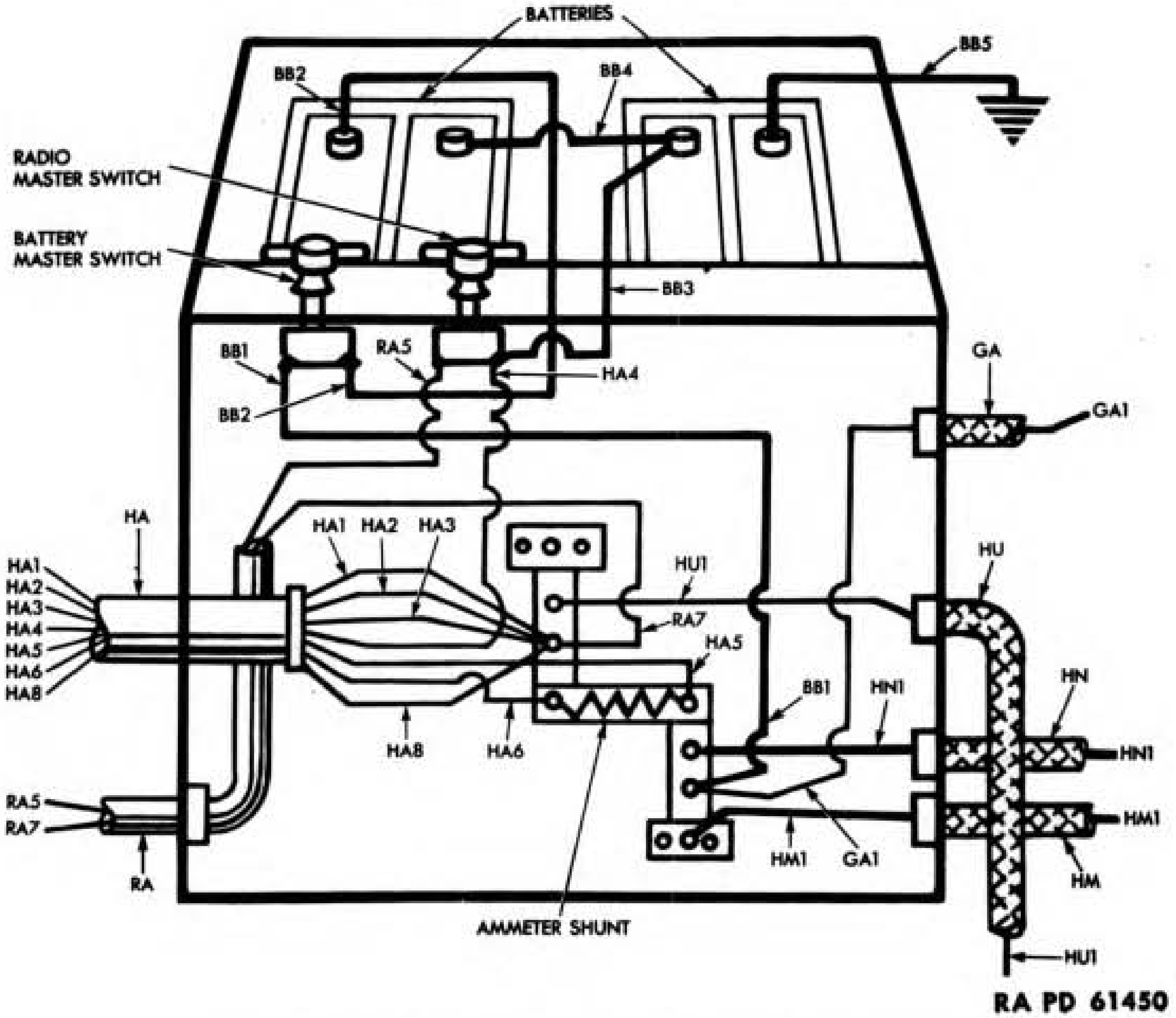

Figure 147—Battery Box Circuits Diagram

symbols in alphabetical order. The size, color, and length of each wire are given to make it easy to identify the wire when trouble shooting a circuit or replacing a wire.

LIST OF WIRING SYSTEMS AND WIRES

Key	Description
BB1	WIRE BB1 .... No. 00, black, 15⅛-in.
BB2	WIRE BB2 .... No. 00, black, 48⅛-in.
BB3	WIRE BB3 .... No. 6, black, 48¼-in.
BB4	WIRE BB4 .... No. 00, black, 6⅝-in.
BB5	WIRE BB5 .... No. 00, black, 19⅛-in.
EA	SYSTEM EA, wiring, LC engine terminal box to left taillight.
EA1	WIRE EA1 .... No. 14, black, 90¾-in.
EA2	WIRE EA2 .... No. 14, orange, 91¾-in.
EA3	WIRE EA3 .... No. 14, yellow w/black tracer, 65½-in.
EA7	WIRE EA7 .... No. 14, orange w/black tracer, 62¾-in.
EA7A	WIRE EA7A .... No. 14, orange w/black tracer, 6¾-in.

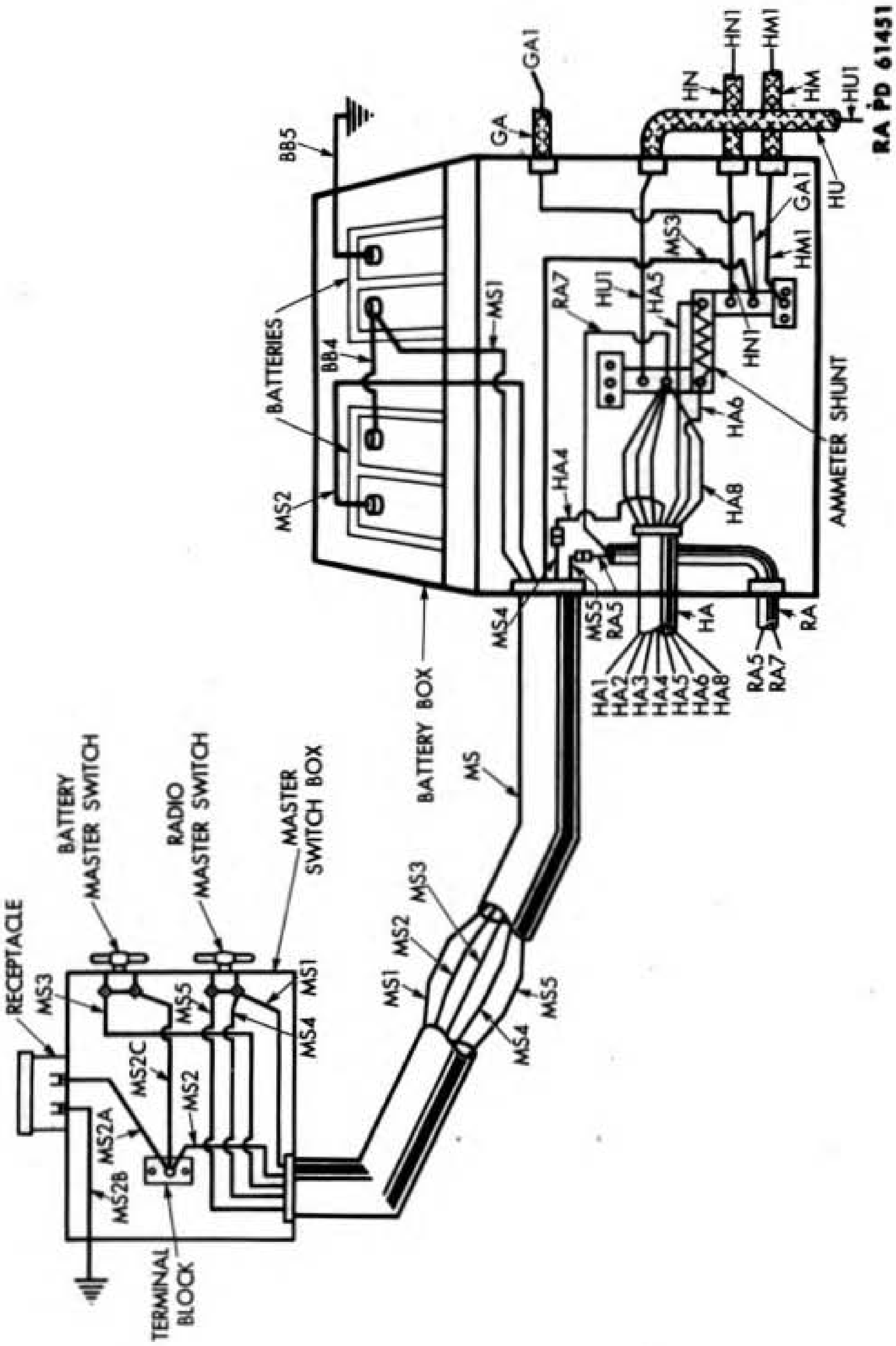

RA PD 61451

Figure 148—Master Switch Box and Battery Box Circuits Diagram

Key	Description
EB	SYSTEM EB, wiring, LC engine terminal box to engine.
EB4	WIRE EB4 .... No. 12, natural w/black tracer, 31½-in.
EB5	WIRE EB5 .... No. 14, brown w/black tracer, 27½-in.
EB8	WIRE EB8 .... No. 14, blue w/black tracer, 22-in.
EB8A	WIRE EB8A .... No. 16, shielded, 3⅝-in.
EC	SYSTEM EC, wiring, LC engine terminal box to filter panel.
EC4	WIRE EC4 .... No. 12, natural w/black tracer, 38-in.
EC6	WIRE EC6 .... No. 14, green w/black tracer, 27-in.
ED	SYSTEM ED, wiring, LA engine terminal box to right taillight.
ED1	WIRE ED1 .... No. 14, red, 90¾-in.
ED2	WIRE ED2 .... No. 14, orange, 91¾-in.
ED3	WIRE ED3 .... No. 14, yellow, 65½-in.
EE	SYSTEM EE, wiring, LA engine terminal box to engine.
EE4	WIRE EE4 .... No. 12, natural, 31½-in.
EE5	WIRE EE5 .... No. 14, brown, 27½-in.
EE8	WIRE EE8 .... No. 14, blue, 22-in.
EE8A	WIRE EE8A .... No. 16, shielded, 3⅝-in.
EF	SYSTEM EF, wiring, LA engine terminal box to filter panel.
EF4	WIRE EF4 .... No. 12, natural, 37-in.
EF6	WIRE EF6 .... No. 12, green, 27-in.
EF7	WIRE EF7 .... No. 14, maroon, 38-in.
EG	SYSTEM EG, wiring, auxiliary starter button.
EG1	WIRE EG1 .... No. 12, maroon, 14⅞-in.
FP1	WIRE FP1 .... No. 16, black, 3¾-in.
FP2	WIRE FP2 .... No. 18, black, $2\frac{5}{16}$-in.
FP3	WIRE FP3 .... No. 15, shielded, 85½-in.
FP4	WIRE FP4 .... No. 15, shielded, 67½-in.
GA	SYSTEM GA, wiring, battery to circuit breaker.
GA1	WIRE GA1 .... No. 14, red, $47\frac{11}{16}$-in.
GB	SYSTEM GB, wiring, circuit breaker to relay box.
GB1	WIRE GB1 .... No. 14, red, 45¾-in.
GB1A	WIRE GB1A .... No. 14, red, 3⅛-in.

Key	Description
GC	SYSTEM GC, wiring, relay box to turret connector.
GC1	WIRE GC1....................No. 14, gray, 39¼-in.
GC2	WIRE GC2..................No. 14, black, 36¼-in.
GD	SYSTEM GD, wiring, turret plug to gun firing switch.
GD1	WIRE GD1......................No. 14, gray, 66-in.
GD2	WIRE GD2..................No. 14, black, 68⅛-in.
GD2A	WIRE GD2A................No. 14, black, 24¼-in.
GD2B	WIRE GD2B..................No. 14, chrome, 3-in.
GS	SYSTEM GS, engine ground strap.
HA	SYSTEM HA, wiring, battery box to instrument panel.
HA1	WIRE HA1.............No. 12, black, 148⅛-in. (A)
HA2	WIRE HA2.............No. 12, black, 148⅛-in. (B)
HA3	WIRE HA3.............No. 12, black, 148⅛-in. (C)
HA4	WIRE HA4.................No. 14, natural w/black tracer, 155½-in. (D)
HA5	WIRE HA5..........No. 14, natural w/black and red tracer, 148⅝-in. (E)
HA6	WIRE HA6.................No. 14, natural w/green tracer, 148⅝-in (F)
HA8	WIRE HA8.............No. 12, black, 148⅛-in. (H)
HB	SYSTEM HB, wiring, instrument panel to hull terminal box.
HB1	WIRE HB1.............No. 14, orange, 14¼-in. (A)
HB2	WIRE HB2.No. 14, orange w/black tracer, 13⅝-in. (B)
HB3	WIRE HB3..............No. 14, green, 16¾-in. (C)
HB4	WIRE HB4................No. 14, black w/natural tracer, 16½-in. (D)
HB5	WIRE HB5..............No. 14, black, 17½-in. (E)
HB5A	WIRE HB5A.................No. 14, black, 5¾-in.
HB6	WIRE HB6..No. 18, gray w/black tracer, 17½-in. (F)
HB7	WIRE HB7.................No. 18, gray, 19-in. (G)
HC	SYSTEM HC, wiring, instrument panel to LA engine terminal box.
HC1	WIRE HCI.................No. 14, red, 218-in. (A)
HC2	WIRE HC2............No. 14, orange, 219¼-in. (B)
HC3	WIRE HC3..............No. 14, yellow, 219-in. (C)

Key	Description
HC4	WIRE HC4............No. 12, natural, 221¾-in. (D)
HC5	WIRE HC5..................No. 14, tan, 220-in. (E)
HC6	WIRE HC6.............No. 14, green, 222½-in. (F)
HC7	WIRE HC7............No. 12, maroon, 221¼-in. (G)
HC7A	WIRE HC7A...................No. 14, maroon, 7-in.
HC8	WIRE HC8................No. 14, blue, 224-in. (H)
HD	SYSTEM HD, wiring, instrument panel to LC engine terminal box.
HD1	WIRE HD1................No. 14, black w/natural tracer, 145¾-in. (A)
HD2	WIRE HD2...........No. 14, orange, 149½-in. (B)
HD3	WIRE HD3..................No. 14, yellow, w/black tracer, 148¼-in. (C)
HD4	WIRE HD4................No. 12, natural w/black tracer, 145½-in. (D)
HD5	WIRE HD5....No. 14, tan w/black tracer, 149-in. (E)
HD6	WIRE HD6..................No. 14, green w/black tracer, 146½-in. (F)
HD7	WIRE HD7..................No. 14, orange w/black tracer, 150½-in. (G)
HD7A	WIRE HD7A.....No. 14, orange w/black tracer, 7-in.
HD8	WIRE HD8.....................No. 14, blue w/black tracer, 147¾-in. (H)
HE	SYSTEM HE, wiring, hull terminal box to left headlight.
HE1	WIRE HE1...............No. 14, orange, $20\frac{13}{16}$-in.
HE2	WIRE HE2..No. 14, orange w/black tracer, $18\frac{13}{16}$-in.
HE4A	WIRE HE4A..No. 16, natural w/black tracer, $20\frac{9}{16}$-in.
HF	SYSTEM HF, wiring, hull terminal box to right headlight.
HF1	WIRE HF1.................No. 14, orange, 92⅛-in.
HF2	WIRE HF2....No. 14, orange w/black tracer, 89⅝-in.
HF5	WIRE HF5.................No. 14, black, $42\frac{7}{16}$-in.
HF5A	WIRE HF5A..................No. 14, black, 7-in.
HG	SYSTEM HG, wiring, hull terminal box to dome light.
HG5	WIRE HG5..................No. 14, black, 46⅝-in.
HG5A	WIRE HG5A..................No. 14, black, 6¼-in.

Key	Description
HH	SYSTEM HH, wiring, hull terminal box to siren and stop light switch.
HH3	WIRE HH3 .... No. 14, green, 58$\frac{5}{8}$-in.
HH3A	WIRE HH3A .... No. 14, black, 11$\frac{5}{8}$-in.
HH5	WIRE HH5 .... No. 14, black, 51$\frac{1}{16}$-in.
HH5A	WIRE HH5A .... No. 14, black, 13$\frac{7}{16}$-in.
HH8	WIRE HH8 .... No. 14, yellow, 59$\frac{1}{16}$-in.
HI	SYSTEM HI, wiring, hull terminal box to siren connector.
HI8	WIRE HI8 .... No. 14, yellow, 28$\frac{5}{16}$-in.
HJ	SYSTEM HJ, wiring, connector to siren.
HJ8	WIRE HJ8 .... No. 14, yellow, 6-in.
HK	SYSTEM HK, wiring, hull terminal box to resistor box.
HK4	WIRE HK4 ... No. 14, black w/natural tracer, 28$\frac{1}{4}$-in.
HK4A	WIRE HK4A .... No. 16, natural w/black tracer, 26-in.
HL	SYSTEM HL, wiring, hull terminal box to low oil pressure microswitch.
HL5	WIRE HL5 .... No. 14, black, 56$\frac{3}{8}$-in.
HL5A	WIRE HL5A .... No. 14, black, 2$\frac{3}{4}$-in.
HL6	WIRE HL6 ...... No. 18, gray w/black tracer, 60$\frac{7}{8}$-in.
HL7	WIRE HL7 .... No. 18, gray, 56$\frac{5}{8}$-in.
HM	SYSTEM HM, wiring, battery box to LC starter.
HM1	WIRE HM1 .... No. 00, black, 81$\frac{1}{4}$-in.
HM1A	WIRE HM1A .... No. 00, black, 10-in.
HN	SYSTEM HN, wiring, battery box to LA starter.
HN1	WIRE HN1 .... No. 00, black, 120$\frac{1}{4}$-in.
HN1A	WIRE HN1A .... No. 00, black, 10-in.
HO	SYSTEM HO, wiring, LC generator armature to regulator.
HO1	WIRE HO1 .... No. 6, black w/red tracer, 29$\frac{1}{8}$-in.
HP	SYSTEM HP, wiring, LC generator field coils to regulator.
HP1	WIRE HP1 .... No. 14, yellow, 29$\frac{1}{8}$-in.

Key	Description
HQ	SYSTEM HQ, wiring, LC generator regulator to filter box.
HQ1	WIRE HQ1 No. 8, black w/red tracer, $25\frac{5}{8}$-in.
HQ1A	WIRE HQ1A No. 8, black w/red tracer, 4-in.
HR	SYSTEM HR, wiring, LA generator armature to regulator.
HR1	WIRE HR1 No. 6, black, $68\frac{5}{8}$-in.
HS	SYSTEM HS, wiring, LA generator field coils to regulator.
HS1	WIRE HS1 No. 14, yellow, $75\frac{1}{8}$-in.
HT	SYSTEM HT, wiring, LA generator regulator to filter box.
HT1	WIRE HT1 No. 8, black w/red tracer, $27\frac{5}{8}$-in.
HT1A	WIRE HT1A No. 8, black w/red tracer, 4-in.
HU	SYSTEM HU, wiring, generator filter box to battery box.
HU1	WIRE HU1 No. 2, natural w/yellow and black tracer, 28-in.
MS	SYSTEM MS, wiring, battery box to master switch box.
MS1	WIRE MS1 No. 6, black, $91\frac{1}{16}$-in.
MS2	WIRE MS2 No. 00, black, 89-in.
MS2A	WIRE MS2A No. 0, black, $2\frac{5}{8}$-in.
MS2B	WIRE MS2B No. 0, black, 6-in.
MS2C	STRAP MS2C Woven
MS3	WIRE MS3 No. 00, black, 60-in.
MS4	WIRE MS4 No. 14, natural w/black tracer, $45\frac{7}{16}$-in.
MS5	WIRE MS5 No. 12, black w/red tracer, $48\frac{7}{16}$-in.
P1	WIRE P1 No. 12, black, $19\frac{3}{16}$-in.
P2	WIRE P2 No. 14, black, $3\frac{1}{2}$-in.
P3	WIRE P3 No. 14, black, $9\frac{7}{16}$-in.
P4	WIRE P4 No. 12, natural, $1\frac{13}{16}$-in.
P5	WIRE P5 No. 14, blue, $4\frac{3}{8}$-in.
P6	WIRE P6 No. 14, black, $7\frac{5}{8}$-in.
P7	WIRE P7 No. 16, black, $2\frac{7}{8}$-in.
P8	WIRE P8 No. 14, black, $3\frac{3}{4}$-in.

Key	Description
P9	WIRE P9 ... No. 14, black, $8\frac{1}{8}$-in.
P10	WIRE P10 ... No. 14, blue w/black tracer, $2\frac{5}{8}$-in.
P11	WIRE P11 ... No. 14 black, $10\frac{1}{2}$-in.
P12	WIRE P12 ... No. 14, black, $3\frac{1}{2}$-in.
P13	WIRE P13 ... No. 14, black, $3\frac{1}{2}$-in.
P14	WIRE P14 ... No. 12, natural w/black tracer, $10\frac{1}{16}$-in.
P15	WIRE P15 ... No. 16, black, 4-in.
P16	WIRE P16 ... No. 16 black w/red tracer, 4-in.
P17	WIRE P17 ... No. 16, black, $4\frac{3}{16}$-in.
P18	WIRE P18 ... No. 16, black, $6\frac{1}{2}$-in.
P19	WIRE P19 ... No. 16, black, 4-in.
P20	WIRE P20 ... No. 16, black, $6\frac{1}{2}$-in.
P21	WIRE P21 ... No. 16, black 12-in.
P22	WIRE P22 ... No. 16, black, $3\frac{1}{8}$-in.
P23	WIRE P23 ... No. 18, gray w/black tracer, $26\frac{3}{4}$-in.
P24	WIRE P24 ... No. 18, gray, $17\frac{3}{4}$-in.
P25	WIRE P25 ... No. 18, gray w/black tracer, $3\frac{3}{32}$-in.
P26	WIRE P26 ... No. 18 gray, $3\frac{3}{32}$-in.
PA	PLUG PA, battery box to instrument panel.
PA1	WIRE PA1 ... No. 12, black, $6\frac{11}{16}$-in. (A)
PA2	WIRE PA2 ... No. 12, black, $6\frac{11}{16}$-in. (B)
PA3	WIRE PA3 ... No. 12, black, $6\frac{11}{16}$-in. (C)
PA4	WIRE PA4 . No. 14, natural w/black tracer, $7\frac{3}{16}$-in. (D)
PA5	WIRE PA5 ... No. 16, natural w/black and red tracer, $12\frac{3}{16}$-in. (E)
PA6	WIRE PA6 ... No. 16, natural w/gray tracer, $10\frac{11}{16}$-in. (F)
PA8	WIRE PA8 ... No. 12, black, $6\frac{11}{16}$-in. (H)
PB	PLUG PB, instrument panel to hull terminal box.
PB1	WIRE PB1 ... No. 14, orange, $23\frac{3}{16}$-in. (A)
PB1A	WIRE PB1A ... No. 14, orange, $4\frac{1}{4}$-in.
PB2	WIRE PB2 ... No. 14, orange w/black tracer, $23\frac{3}{16}$-in. (B)
PB3	WIRE PB3 ... No. 14, green, $20\frac{15}{16}$-in. (C)
PB4	WIRE PB4 ... No. 14, black w/natural tracer, $21\frac{3}{16}$-in. (D)
PB5	WIRE PB5 ... No. 14, black, 8-in. (E)

Key	Description
PB6	WIRE PB6 No. 18, gray w/black tracer, $19\frac{1}{2}$-in. (F)
PB7	WIRE PB7 No. 18, gray, $15\frac{1}{4}$-in. (G)
PC	PLUG PC, instrument panel to LA engine terminal box.
PC1	WIRE PC1 No. 14, red, $5\frac{9}{16}$ in. (A)
PC2	WIRE PC2 No. 14, orange, $8\frac{3}{16}$-in. (B)
PC3	WIRE PC3 No. 14, yellow, $3\frac{3}{4}$-in. (C)
PC4	WIRE PC4 No. 12, natural, $16\frac{7}{8}$-in. (D)
PC5	WIRE PC5 No. 14, brown, $3\frac{3}{4}$-in. (E)
PC6	WIRE PC6 No. 14, green, 15-in. (F)
PC7	WIRE PC7 No. 12, maroon, $20\frac{3}{8}$-in. (G)
PC8	WIRE PC8 No. 14, blue, 18-in. (H)
PD	PLUG, PD instrument panel to LC engine terminal box.
PD1	WIRE PD1 No. 14, black w/natural tracer, $9\frac{3}{16}$-in. (A)
PD2	WIRE PD2 No. 14 orange, $11\frac{11}{16}$-in. (B)
PD3	WIRE PD3 No. 14, yellow w/black tracer, $7\frac{1}{2}$-in. (C)
PD4	WIRE PD4 No. 12, natural w/black tracer, $9\frac{7}{8}$-in. (D)
PD5	WIRE PD5 No. 14, brown w/black tracer, $4\frac{1}{2}$-in. (E)
PD6	WIRE PD6 No. 14, green w/black tracer, $14\frac{11}{16}$-in. (F)
PD7	WIRE PD7 No. 14, orange w/black tracer, $10\frac{1}{4}$-in. (G)
PD8	WIRE PD8 No. 14, blue w/black tracer, $13\frac{11}{16}$-in. (H)
RA	SYSTEM RA, wiring, battery to radio terminal box.
RA5	WIRE RA5 No. 12, black w/red tracer, 162-in.
RA7	WIRE RA7 No. 6, black, $164\frac{9}{16}$-in.

186. BATTERIES.

a. Description. The batteries are located in the battery box under the left side of fighting compartment floor (fig. 149). The two 12-volt batteries are connected in series to produce 24 volts with the negative post on the rear battery grounded to hull floor and the positive post on the front battery connected to the 24-volt battery master switch. In addition, the positive side of the rear battery is

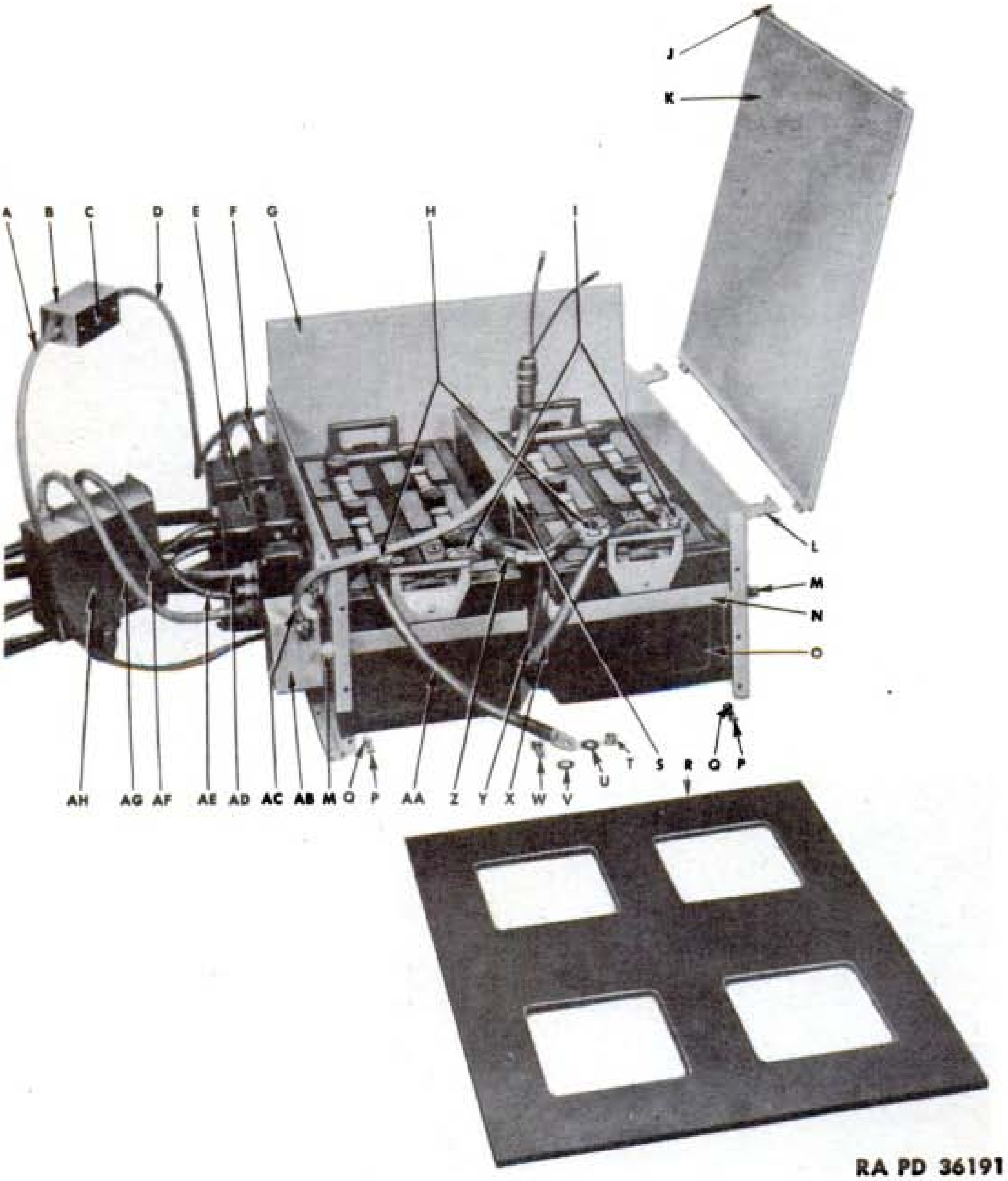

Figure 149—Battery Box, Batteries, Regulators, Circuit Breakers, Filter Box and Connections

connected to one terminal on the radio master switch, and another wire on this same terminal supplies current for the engine air heater and emergency stop valve circuits.

b. Battery Maintenance. Batteries must be inspected at the 50-hour, or weekly, and at the 100-hour preventive maintenance service. This includes taking a hydrometer reading of each cell to determine the state of charge (fig. 150), adding water to maintain the correct level of the electrolyte, inspecting battery cable terminals, cables and the general condition of the batteries, and cleaning battery cable terminals if necessary.

(1) Raise Battery Box Cover. Raise fighting compartment floor doors above battery box (fig. 33, D and E). Unfasten the four clamps and lift out the battery box cover.

(2) Take Hydrometer Readings and Add Water. Storage batteries give off free hydrogen when being charged or discharged. Hydrogen, when mixed with air in certain proportions, is highly explosive. For this reason keep open flame away from batteries and avoid causing sparks around batteries, when vent plugs are removed, to prevent personal injury. Unscrew and remove vent plugs in all cells. When using the hydrometer, draw only enough electrolyte into the tube to center the hydrometer float between top and bottom of tube. If specific gravity readings are less than 1.225 at normal temperatures, the battery must be replaced with one which is fully charged. When air temperature is below 50°F or above 90°F, allow the electrolyte to remain in hydrometer long enough for the thermometer to indicate exact temperature of electrolyte. The correction scale alongside the thermometer shows the figure to subtract or add to the hydrometer reading to obtain the actual specific gravity of the electrolyte. It is important that hydrometer readings always be corrected for temperature in very hot weather and in cold weather (par. 19 a). If battery readings indicate a satisfactory state of

A—GUN FIRING CIRCUIT BREAKER TO RELAY SWITCH SYSTEM
B—GUN FIRING CIRCUIT BREAKER BOX
C—GUN FIRING CIRCUIT BREAKER
D—GUN FIRING CIRCUIT BREAKER TO BATTERY BOX SYSTEM
E—GENERATOR REGULATOR
F—GENERATOR FILTER BOX TO BATTERY BOX SYSTEM
G—BATTERY BOX PARTITION
H—BATTERY NEGATIVE POST TERMINAL
I—BATTERY POSITIVE POST TERMINAL
J—BATTERY BOX COVER FASTENER
K—BATTERY BOX COVER
L—BATTERY BOX COVER CLAMP
M—BATTERY STRAP NUT
N—BATTERY STRAP
O—BATTERY
P—WASHER
Q—BOLT
R—BATTERY BOX PAD
S—BATTERY BOX COVER SUPPORT
T—BATTERY GROUND CABLE NUT
U—WASHER
V—LOCKWASHER
W—BATTERY GROUND CABLE BOLT
X—BATTERY TO 24-VOLT MASTER SWITCH CABLE
Y—BATTERY TO 12-VOLT RADIO SWITCH CABLE
Z—BATTERY CONNECTOR CABLE
AA—BATTERY GROUND CABLE
AB—GUN FIRING RELAY SWITCH BOX
AC—RELAY SWITCH TO TURRET CONNECTOR PLUG SYSTEM
AD—RIGHT GENERATOR ARMATURE TO REGULATOR SYSTEM
AE—RIGHT GENERATOR FIELD TO REGULATOR SYSTEM
AF—LEFT GENERATOR REGULATOR TO FILTER BOX SYSTEM
AG—RIGHT GENERATOR REGULATOR TO FILTER BOX SYSTEM
AH—RADIO FILTER BOX

RA PD 36191B

Legend for Figure 149—Battery Box, Batteries, Regulators, Circuit Breakers, Filter Box and Connections

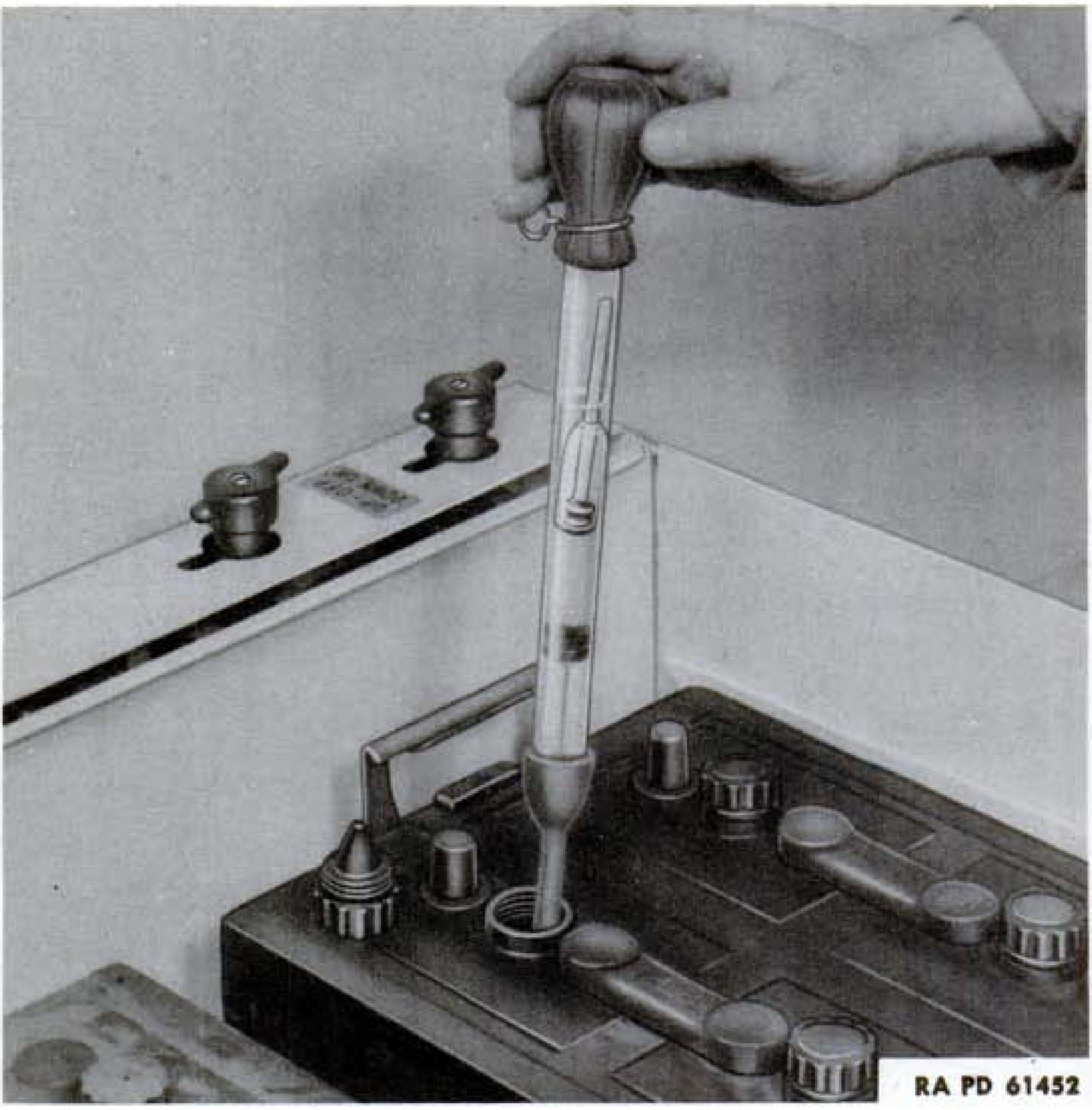
RA PD 61452

Figure 150—Taking Hydrometer Reading

charge, add clean water (preferably distilled water) as required to bring the level of the electrolyte ⅜ inch above the separators. Install and tighten vent plugs with fingers.

(3) Clean Battery Terminals and Battery. If battery terminals are corroded, loosen terminal bolts and remove terminals from battery posts. Wipe terminals clean with a cloth dipped in solution of water and ammonium hydroxide (household ammonia) or bicarbonate of soda (baking soda). Remove the cable terminal, battery terminal nuts and bolts, and clean them with the above solution. Also wipe battery posts clean and wipe top of battery dry. Lightly coat bolts, nuts, inside and outside of terminal and battery posts with light rust-preventive compound, or, if not available, use general purpose grease. Install battery cable terminal on battery post, push it down tightly with end of hammer handle (never drive terminal on post) and tighten terminal screw nut. See that battery straps are

tight. Remove and clean straps, if corroded, and coat threads with general purpose grease before and after installing safety nuts.

(4) Lower Battery Box Cover. Place the cover on battery box, and fasten the four clamps. Lower the fighting compartment floor doors.

c. Removal of Batteries. Turn battery master and radio switches "OFF." Remove battery box cover (par. 186 **b** (1)). Disconnect ground cable from negative post on rear battery. Remove connector cable and cable from positive post on front battery. If terminals are corroded, clean them (par. 186 **b** (3)). Pull up and remove the cover support placed between the batteries (fig. 149). Back off battery strap safety nuts until flush with threads. Lift batteries out. Remove wood spacers.

d. Installation of Batteries. Test batteries to be installed with hydrometer to see that they are charged. Remove pad on floor in battery compartment, and clean the floor. If pad is not serviceable, replace it. Place pad on floor. Use a long wire around the two battery straps at corner toward center of vehicle to lift straps. Hold straps level and lower batteries into position on floor. CAUTION: *Do not drop batteries.* Position a wood spacer between each battery and compartment wall. Tighten safety nuts to draw straps against batteries with only moderate pressure. Apply light grade rust-preventive compound, to battery cable terminals, clamp bolt and battery posts, also to exposed threads on ends of battery straps. Install cable terminals on battery posts, press them down tightly with end of hammer handle (do not hammer on battery posts) and tighten clamp bolt nuts. Slide cover support into position between the batteries. Install and fasten battery box cover. Turn battery master switch "ON" and lower the doors in fighting compartment floor. Start and run each engine separately, and check charging rate of each generator.

187. BATTERY SWITCHES.

a. Description. The battery master switch and radio master switch are in the left front corner of the battery box. However, on very recent models, these two switches are located in a master switch box attached to propeller shaft housing at front edge of fighting compartment floor, at the center. The box also contains a receptacle into which a cable can be plugged for charging the batteries in the vehicle (fig. 148).

b. Removal and Installation of Battery Switches.

(1) To Remove and Install Switch on Battery Box. Raise battery box cover, and disconnect battery ground cable at negative post on rear battery. Pull the partition in battery box at side of switches straight up and remove (fig. 151). Take out screw in bat-

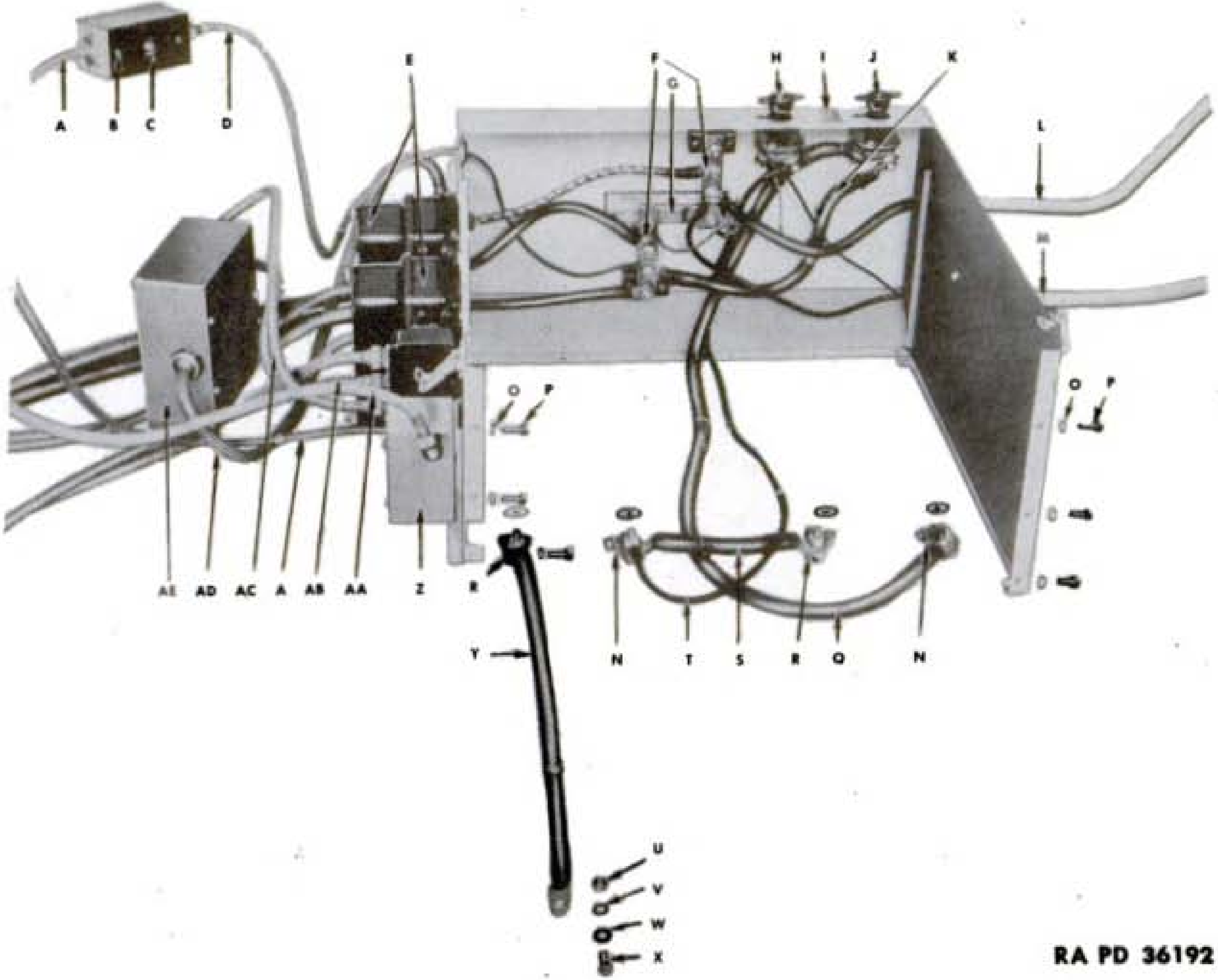

RA PD 36192

Figure 151—Battery Box, Master Switches, Regulators, Circuit Breakers, Filter Box, and Connections

A—GUN FIRING CIRCUIT BREAKER TO RELAY SWITCH SYSTEM
B—GUN FIRING CIRCUIT BREAKER BOX
C—GUN FIRING CIRCUIT BREAKER
D—GUN FIRING CIRCUIT BREAKER TO BATTERY BOX SYSTEM
E—GENERATOR REGULATOR
F—BATTERY BOX TERMINAL BUSS-BAR
G—AMMETER SHUNT
H—12-VOLT RADIO MASTER SWITCH
I—BATTERY SWITCH INSTRUCTION PLATE
J—24-VOLT BATTERY MASTER SWITCH
K—BATTERY MASTER SWITCH TO BUSS-BAR CABLE
L—BATTERY BOX TO INSTRUMENT PANEL SYSTEM
M—BATTERY TO RADIO TERMINAL BOX SYSTEM
N—BATTERY POSITIVE POST TERMINAL
O—WASHER
P—BOLT
Q—BATTERY TO 24-VOLT MASTER SWITCH CABLE
R—BATTERY NEGATIVE POST TERMINAL
S—BATTERY CONNECTOR CABLE
T—BATTERY TO 12-VOLT RADIO SWITCH CABLE
U—BATTERY GROUND CABLE NUT
V—LOCKWASHER
W—WASHER
X—BATTERY GROUND CABLE BOLT
Y—BATTERY GROUND CABLE
Z—GUN FIRING RELAY SWITCH BOX
AA—RELAY SWITCH TO TURRET CONNECTOR PLUG SYSTEM
AB—RIGHT GENERATOR FIELD TO REGULATOR SYSTEM
AC—RIGHT GENERATOR REGULATOR TO FILTER BOX SYSTEM
AD—GENERATOR FILTER BOX TO BATTERY BOX SYSTEM
AE—RADIO FILTER BOX

RA PD 36192B

Legend for Figure 151—Battery Box, Master Switches, Regulators, Circuit Breakers, Filter Box, and Connections

tery switch handle and remove the handle. Remove two screws which attach switch to bracket. Lower the switch out of the bracket, remove terminal nuts and cables. To install switch on battery box, reverse the removal procedure. Make sure switch is centered in hole at top of battery box before tightening it to bracket. Install lock washer under each terminal nut, and tighten nuts securely.

(2) TO REMOVE AND INSTALL SWITCH IN MASTER SWITCH BOX. Raise battery box cover, and disconnect battery ground cable at negative post on rear battery. Take out four screws, and remove cover on rear of master switch box. Remove terminal nuts and cables from switch to be removed. Take out screw in top of switch handle and remove handle. Remove the bolts which attach switch to box, and lower the switch out of the box. To install switch in master switch box, reverse the removal procedure. Install lock washer under each terminal nut and tighten nuts securely.

188. GENERATORS.

a. Description. A 50-ampere, 24-volt generator is mounted on the flywheel housing of each engine (fig. 51). The armature is splined into a coupling mounted on the end of the blower drive shaft. The generator delivers maximum current output at engine speeds above 860 revolutions per minute. The current output of each generator is controlled by a generator regulator.

b. To Inspect and Clean Generator. The generator brushes and commutator must be inspected and the commutator cleaned if necessary at the 100-hour preventive maintenance service, also whenever generator is removed. Remove cover band screw and cover band. Examine brushes for wear and brush springs for tension. If brushes have worn so end of any brush is half way down in brush holder or if tension of a brush spring is weak, replace the generator (par. 188 **d**). If commutator is dirty, clean it by holding a strip of 00 sandpaper against it with a piece of soft wood or with finger while generator is operating. *Never use emery cloth.* Blow dust out with compressed air. If brushes continue to arc excessively after commutator is cleaned, that indicates that the commutator has worn down to the mica insulation between commutator bars, and the generator must be replaced.

c. Polarizing a Generator. Whenever generator or generator regulator tests have been made, or after a generator is installed, the generator must be repolarized before the engine is started. This must be done to make sure the generator has the correct polarity with respect to the system. Failure to do this will result in serious damage to the generators. If both the field and armature wires are connected to generator, disconnect the yellow wire from field terminal at top of generator. Unscrew cap from terminal shield. Remove nut and washer from terminal, and lift wire off terminal and bend it out of the way. If both the field and armature wires are disconnected, first thread the black wire, or the black wire with a red tracer, into armature terminal shield at side of generator. Attach conduit by screwing knurled connector nut onto terminal shield. Place wire over terminal and install, then tighten nut and washer. Screw on knurled cap, and install locking wire. Remove knurled cap from field terminal shield at top of generator. Connect a jumper wire, long enough to reach into the battery box, to the field terminal on top of generator. Momentarily touch the other end of the wire to the positive terminal on the front battery. This will cause a flash of current to flow through the generator field windings and correctly polarize the generator. Remove the jumper wire and connect yellow wire to field terminal and tighten nut. Screw on knurled cap and install locking wire. If the field wire conduit was not previously connected, thread yellow wire through field terminal shield at top of generator, and attach conduit to terminal shield by tightening knurled connector nut. Place wire on terminal post and install lock washer and nut and tighten nut. Screw on knurled cap, and install locking wire.

d. Removal of Generator. Turn battery master switch off. Raise step door over generator and remove the knurled cap from each terminal shield by breaking the locking wire and unscrewing the cap. Use a ¾-inch socket wrench and remove the terminal nut and washer from each terminal stud. Unscrew the knurled conduit connector nut that attaches each conduit to its terminal shield. Lift cable off terminal stud and pull cable free of terminal shield. Tag the two cables for identification. Put washers and nuts on terminals and the caps on terminal shields for safekeeping. Remove bolts and nuts that attach generator to engine, supporting the forward end of generator as last nut is removed. Pull generator forward until clear of the engine and lift out of compartment.

e. Installation of Generator. Install both halves of coupling with coupling ring on end of blower drive shaft. Place new gasket on generator mounting flange. Position generator and rotate housing to line up splines on end of generator armature shaft, and push generator into place on flywheel housing. Support generator and install bolts and nuts with lock washers, and tighten evenly to compress gasket uniformly. Polarize generator (par. 188 **c**). Turn battery master switch on. Start engine and check polarity and generator output by observing ammeter and voltmeter readings. If ammeter shows discharge, stop engine and repolarize the generator (par 188 **c**).

189. GENERATOR REGULATORS.

a. Description. The current output of each generator is controlled by a voltage regulator. The two generator regulators are mounted, side by side, on the outside of the battery box, at the rear (fig. 151). Generator regulators must not be adjusted by the using arms. If ammeter or voltmeter show incorrect reading and the trouble has been traced to the generator regulator, it must be replaced.

b. Removal of Generator Regulator. Turn battery master switch off. Remove the four bolts which attach the voltage generator regulator to the battery box. Take out the four screws, and remove the cover on the terminal shield at the side of the voltage regulator. Unscrew the three conduit connector nuts which attach the conduits to the terminal shield. Remove the nuts and washers from the three terminals, lift off the wires and pull the wires out of the terminal shield one at a time. Tag for identification with same letters as those for terminals. Put terminal washers and nuts back on terminal studs, and install cover on terminal shield with four screws and lock washers.

c. Installation of Generator Regulator. Remove terminal shield cover and take nuts and lock washers off the three terminals. Remove tag and insert wires, one at a time, into terminal shield, installing lock washers and nuts and tightening nuts. Screw three connector nuts onto terminal shield and tighten. Install cover on terminal shield with lock washers on the four screws, and tighten screws. Scrape paint off underside of feet on voltage regulator, and scrape corresponding surfaces on battery box to insure a positive ground. Attach generator regulator to battery box with four bolts and lock washers, and tighten bolts. Turn battery master switch on. Start engine and read ammeter and voltmeter to check operation of generator and regulator.

190. STARTERS.

a. Description. Each engine is equipped with a 24-volt heavy-duty starter mounted on the flywheel housing (fig. 32). The starter pinion is mechanically shifted into engagement by the starter solenoid switch assembly mounted on the starter. The solenoid switch is operated by a starter button on the instrument panel or by an auxiliary starter button on the filter panel in the engine compartment.

b. Lubrication of Starter. A starter must be lubricated with engine oil, before it is installed, and both starters must be lubricated whenever the power unit is removed from the vehicle. There are three oilers on each starter, one for the bearing at each end of the armature and one for the outboard bearing in the end of the drive housing. With the starter installed, the oiler for the outboard bearing is reached by removing a plug in the flywheel housing.

c. Removal of Starter. Turn battery master switch off. Remove engine compartment floor plate (par. 170 **b**) under the engine from which starter is to be removed. Drain engine lubricating system (par. 55 **b**). Remove the bolts from both inlet and outlet oil hose elbows at the lubricating oil tank, and swing hoses to one side. Remove the two clamps which attach starter cable to the engine. Put washer and nut on terminal screw for safekeeping. Use a long extension ⅞-inch socket wrench with universal joint and, reaching over starter, remove the top bolt that attaches starter to flywheel housing, then loosen the other two bolts. Position blocks on ground to within ten inches of hull floor on which to place starter while removing wires. Support the starter, and remove the two remaining bolts. Pull starter out of flywheel housing and lower it through the opening onto the blocks already positioned on the ground. Disconnect the wire from the top of the starter solenoid. Remove terminal shield cap by breaking locking wire and unscrewing cap. Use a ¾-inch socket wrench and remove nut and washer from terminal stud recessed into terminal shield (fig. 152). Unscrew connector nut on starter cable conduit, remove the cable clip (terminal) from terminal stud, and work cable out of terminal shield. Put washer and nut on terminal stud, and screw the cap on the terminal shield for safekeeping. Remove starter from under vehicle.

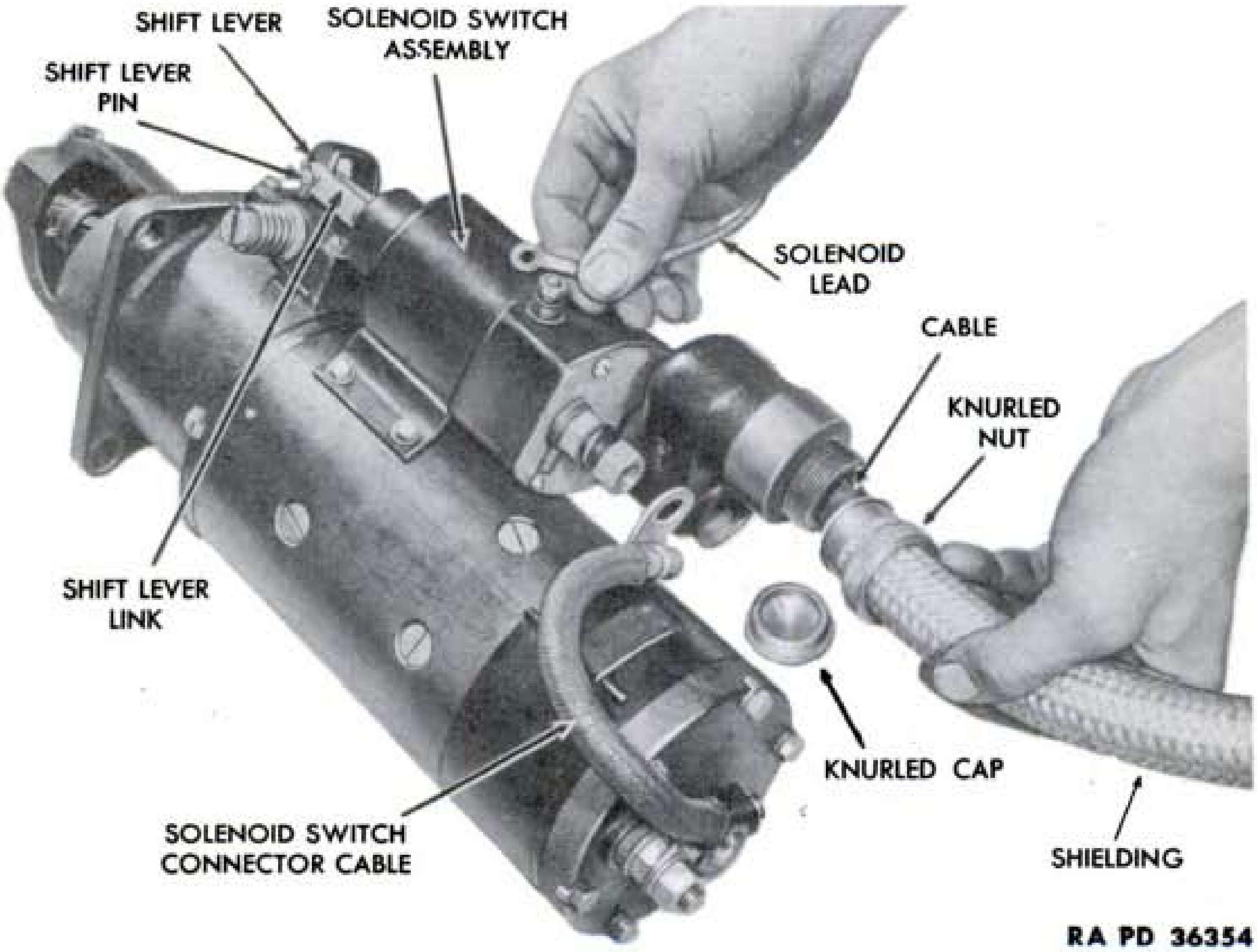

Figure 152—Removing Starter Solenoid Switch

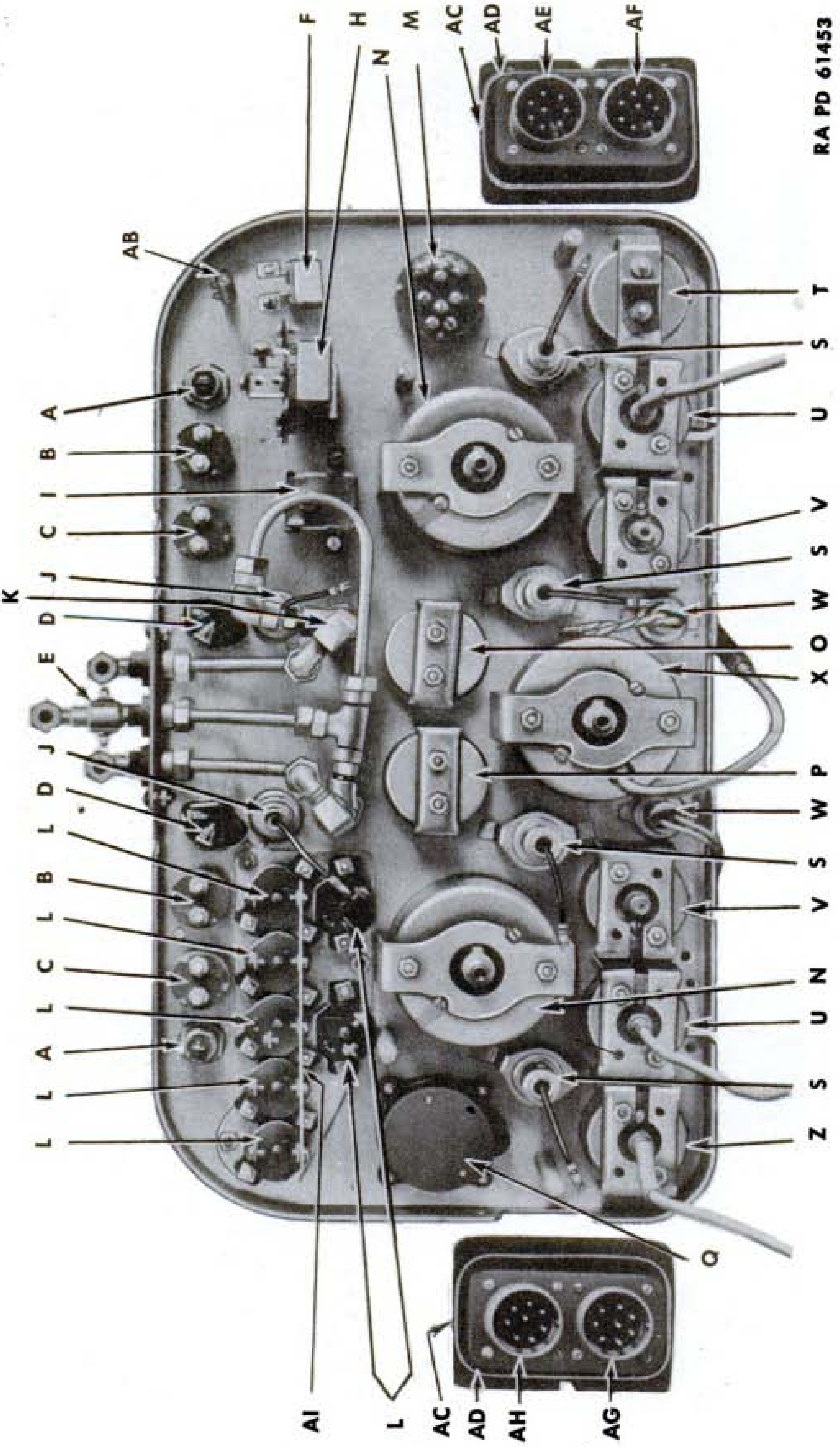

RA PD 61453

Figure 153—Rear of Instrument Panel Face Plate

A—OUTLET SOCKETS
B—STARTER BUTTONS
C—EMERGENCY STOP BUTTONS
D—AIR HEATER SWITCHES
E—AIR HEATER FUEL VALVE
F—BLACKOUT LIGHT SWITCH
H—DRIVING LIGHT SWITCH
I—PANEL LIGHT SWTICH
J—AIR HEATER INDICATOR LIGHTS
K—AIR HEATER FUEL PUMP
L—CIRCUIT BREAKER RESET BUTTONS
M—TANK GAGE CONTROL SWITCH
N—TACHOMETERS
O—VOLTMETER
P—AMMETER
Q—CLOCK

S—INSTRUMENT PANEL LIGHTS
T—FUEL AND OIL GAGE
U—ENGINE TEMPERATURE GAGES
V—ENGINE OIL PRESSURE GAGES
W—LOW OIL PRESSURE WARNING LIGHTS
X—SPEEDOMETER
Z—TRANSMISSION OIL TEMPERATURE GAGE
AB—FUEL AND OIL GAGE RESISTOR
AC—INSTRUMENT PANEL PLUG CASE
AD—GASKET
AE—PLUG PC
AF—PLUG PD
AG—PLUG PB
AH—PLUG PA
AI—BUSS BAR

RA PD 61453B

Legend for Figure 153—Rear of Instrument Panel Face Plate

d. Installation of Starter. Lubricate starter with engine oil (step **b** above). Remove cap from terminal shield, and nut and washer from terminal stud. Place starter on support under vehicle. Work starter cable clip (terminal) through terminal shield, place clip over terminal stud, install washer and nut and tighten. Screw cap on terminal shield and insert locking wire through holes in terminal cap and shield and twist ends of wire. Screw connector nut onto terminal shield and tighten. Remove nut and washer from solenoid switch terminal and attach wire and tighten nut. Position starter in flywheel housing with solenoid at top and install bolts with lock washers and tighten. Attach starter cable clamps to engine. Attach both oil hoses to lubricating oil tank, using new gaskets. Fill engine lubricating system (par. 56 **b**). Turn battery master switch on. Check operation of starter by starting engine. Check for oil leaks. Install engine compartment floor plate (par. 170 **c**).

191. STARTER SOLENOID SWITCHES.

a. Description. A starter solenoid switch is mounted on each starter (fig. 152). The solenoid is operated by either the starter button on instrument panel or by auxiliary starter button in the engine compartment. Pressing either starter button energizes the solenoid which first shifts the starter pinion into positive engagement with flywheel ring gear, and then closes the starter switch. When the engine starts, the pinion is spun back out of mesh with the flywheel ring gear and cannot be reengaged with the flywheel ring gear until starter button is released and then pressed again.

b. Removal of Starter Solenoid Switch. Remove starter (par. 190 **c**). Disconnect switch connector cable at solenoid switch (fig. 152). Put washer and nut back on terminal. Remove cotter pin and pin which attaches starter shift lever to solenoid plunger. Remove locking wire, and take out four bolts which attach solenoid.

c. Installation of Starter Solenoid Switch. Position switch on starter, install four bolts and tighten. Safety-wire the two bolts on each side. Connect solenoid link to shift lever by installing clevis pin and insert and spread cotter pin. Connect switch connector cable at solenoid switch. Install starter (par. 190 **d**).

192. INSTRUMENT PANEL.

a. General. All of the instruments, gages, switches and other units on the instrument panel are illustrated in figure 10. The purpose of each unit on the instrument panel and instructions for operating the various switches and controls are contained in paragraph 7. Consequently the information in this and the following paragraphs (193 through 209) covers only the procedure for removing and installing the instrument panel and its various units.

b. Removal of Instrument Panel Face Plate.

(1) TURN BATTERY MASTER SWITCH "OFF."

(2) DISCONNECT LUBRICATING OIL HOSES. Disconnect the hose from the tee on each low oil pressure warning light switch at right side of panel (fig. 10). Tag one hose for identification. NOTE: *The plate on side of panel where oil hose elbows are attached is stamped "L" for left engine and "R" for right engine.*

(3) DISCONNECT AIR HEATER FUEL HOSES. Disconnect each air heater fuel hose at the three elbows on top of instrument panel (fig. 10). Tag each hose, before removing, with the corresponding letters "L," or "R" which are stamped into the plate.

(4) DISCONNECT CONDUITS, TACHOMETER AND SPEEDOMETER SHAFTS. Reaching behind the instrument panel case, unscrew two conduit coupling nuts on each side. Tag each conduit for identification and pull the four plugs out of the sockets. Unscrew knurled nuts and disconnect the speedometer shaft and two tachometer shafts, tagging the latter two shafts for right and left engines.

(5) REMOVE INSTRUMENT PANEL FACE PLATE FROM CASE. Detach speedometer reset cable from bracket at bottom of panel case by holding hexagonal cable end with wrench and loosening locknut. Take out screws which attach the two small plates to the panel face plate below the temperature gages. Remove six screws which hold instrument panel face plate to panel case (fig. 10). Carefully work the panel face plate out of the case by first pulling on the air heater fuel pump knobs and then prying panel face plate the remainder of the way out of case. Place the instrument panel face plate face-down on the sponson. Any of the units in the instrument panel face plate now can be replaced. If it is desired to remove the panel, the following additional procedure is necessary. Unscrew two nuts on each of the three mounting straps which clamp the temperature gages to the panel face plate, and remove straps (fig. 153). Raise panel up into vertical position, support it and remove the three temperature gages by slipping the tubes through slots in lower edge of panel face. Tag the two engine temperature gages for identification. The instrument panel face plate now can be removed from the sponson and taken out of the vehicle.

c. Installation of Instrument Panel Face Plate.

(1) INSTALL INSTRUMENT PANEL FACE PLATE. If instrument panel face plate was removed, place it on sponson and position the engine and transmission temperature gages in the panel. Install the three mounting straps, screw on nuts and tighten. Mount the panel in the case and install and tighten the six screws in face of panel. Install the two plates below the temperature gages (fig. 10).

(2) CONNECT CONDUITS, TACHOMETER AND SPEEDOMETER SHAFTS. Working behind the instrument panel case and from the

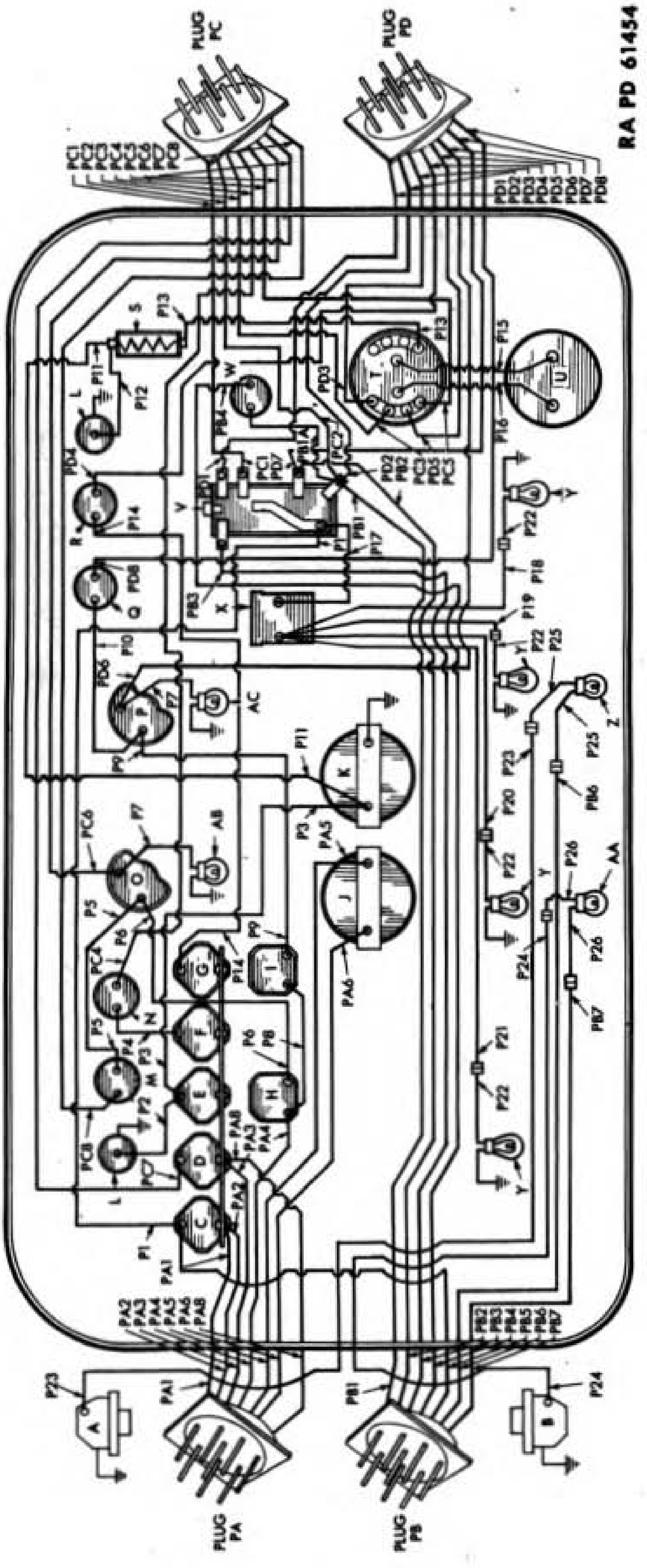

Figure 154—Instrument Panel Wiring Diagram

A—LOW OIL PRESSURE WARNING LIGHT SWITCH FOR LEFT ENGINE
B—LOW OIL PRESSURE WARNING LIGHT SWITCH FOR RIGHT ENGINE
C—CIRCUIT BREAKER FOR LIGHTS, SIREN, OIL PRESSURE SWITCHES
D—CIRCUIT BREAKER FOR AUXILIARY STARTER SWITCHES
E—CIRCUIT BREAKER FOR OUTLETS, VOLTMETER, RESISTOR, TANK GAGES CIRCUITS
F—CIRCUIT BREAKER FOR RIGHT ENGINE STARTER SWITCH
G—CIRCUIT BREAKER FOR LEFT ENGINE STARTER SWITCH
H—CIRCUIT BREAKER FOR RIGHT ENGINE AIR HEATER
I—CIRCUIT BREAKER FOR LEFT ENGINE AIR HEATER
J—AMMETER
K—VOLTMETER
L—OUTLET SOCKETS
M—EMERGENCY STOP BUTTON FOR RIGHT ENGINE
N—STARTER BUTTON FOR RIGHT ENGINE
O—AIR HEATER SWITCH FOR RIGHT ENGINE
P—AIR HEATER SWITCH FOR LEFT ENGINE
Q—EMERGENCY STOP BUTTON FOR LEFT ENGINE
R—STARTER BUTTON FOR LEFT ENGINE
S—FUEL AND OIL GAGE RESISTOR
T—TANK GAGE CONTROL SWITCH
U—FUEL AND OIL GAGE
V—DRIVING LIGHT SWITCH
W—BLACKOUT LIGHT SWITCH
X—PANEL LIGHT SWITCH
Y—INSTRUMENT PANEL LIGHTS
Z—LOW OIL PRESSURE WARNING LIGHT FOR LEFT ENGINE
AA—LOW OIL PRESSURE WARNING LIGHT FOR RIGHT ENGINE
AB—AIR HEATER INDICATOR LIGHT FOR RIGHT ENGINE
AC—AIR HEATER INDICATOR LIGHT FOR LEFT ENGINE

RA PD 61454B

Legend for Figure 154—Instrument Panel Wiring Diagram

right side, connect the two conduit plugs toward rear of vehicle. Turn each plug so that slot in top of plug fits into locating key in sleeve. Push plug all the way in, and tighten coupling nuts only hand tight. Attach left engine tachometer shaft, next the speedometer shaft and then the right engine tachometer shaft. Tighten knurled nuts with pliers. Connect the two remaining conduit plugs, tightening the coupling nuts only hand tight. Remove the identification tags.

(3) CONNECT AIR HEATER FUEL HOSES. Connect each air heater fuel hose to its elbow according to tag on hose and letter on plate (fig. 23). Hold each elbow with wrench while tightening the connection nut. Turn valve to make sure it is tightly closed. Remove identification tags on hoses.

(4) CONNECT LUBRICATING OIL HOSES. Connect the two hoses to the pressure switches at right side of instrument panel according to the tag on one hose and the letter on the plate. Remove identification tag from hose.

(5) TURN BATTERY MASTER SWITCH "ON."

(6) TEST OPERATION OF INSTRUMENT PANEL UNITS. Test emergency stop valve and all light switches. Start engine, and check other instruments and gages. Operate vehicle to check speedometer.

193. AIR HEATER AND LOW OIL PRESSURE INDICATOR LIGHTS AND PANEL LIGHTS.

a. To Replace Lamp. Pry off lamp cover (fig. 10) with screwdriver. Press in on clamp lightly and turn to left to release. Withdraw burned-out lamp. Insert new lamp, and press cover into panel. For air heater indicator lights, use lamp No. 1247, single contact, 12-16 volt with blue beads on filament support wires. For low oil pressure indicator lights, use lamp No. 1252, 24-28 volt double contact. For instrument panel lights, use lamp No. 1251, 24-28 volt.

b. To Replace Light Socket Cable Assembly. Remove instrument panel (par. 192 **b**). Remove lamp from socket. Pull cable terminal out of connector. Push cable through socket and remove it with spring and insulator. To install new cable assembly with spring and insulator, insert cable from face side of panel and push it through hole in socket. Push terminal end of cable into connector. Insert lamp and cover. Install instrument panel (par. 192 **c**).

194. AIR HEATER FUEL PUMPS.

a. To Replace Air Heater Fuel Pump. Pull pump handle out, and unscrew nut on face of panel (fig. 10). Pull pump plunger out of pump. Remove instrument panel (par. 192 **b**). Unscrew nuts on both ends of U-shaped tube which delivers fuel from tee on supply tube to left pump (fig. 153). Hold elbow and tee while breaking nuts loose. To remove left pump, disconnect discharge tube at small elbow on end of pump, holding large elbow with wrench. Pull pump out of panel. To remove right pump, disconnect fuel supply tube at tee, and discharge tube at elbow, holding tee and large elbow with wrench while breaking nuts loose. Pull pump out of panel. To install new pump, unscrew the nipple with two elbows from end of pump removed and screw into new pump. Tighten nipple to locate elbows in same position as on pump removed. When installing new right pump, first install the tee connection taken off the pump removed. Adjust the hexagonal nut on pump body so pump body projects through face of panel the right amount to permit cap nut on face of panel to be tightened. Connect pump, and complete the assembly by reversing the removal procedure. Use wrench to hold connections when tightening, and make sure connections are tight.

195. AIR HEATER SWITCHES.

a. To Replace Air Heater Switch. Remove instrument panel (par. 192 **b**). Disconnect two wires from each terminal, and tag the pairs of wires for identification. Loosen switch knob set screw, and unscrew knob. Remove nut on face of panel, and take out switch. Install new switch by reverse procedure, with lock washer between switch and panel. Position knob with arrow pointing to "OFF" when switch is off (fig. 10) before tightening set screw, and make sure there is the necessary amount of clearance between knob and switch.

196. AMMETER AND VOLTMETER.

a. To Replace Ammeter or Disconnect Voltmeter. Remove instrument panel face plate (par. 192 **b**). Disconnect wires from terminals, and tag wire for identification. Remove nuts and lock washers from studs and remove strap (fig. 153). Lift instrument out of panel. To install the instrument, reverse the removal procedure. Do not replace defective voltmeter. Detach the wiring from the battery to the voltmeter (at the voltmeter) and tape the disconnected terminal. Leave the voltmeter mounted on the instrument panel.

197. BLACKOUT DRIVING LIGHT SWITCH.

a. To Replace Blackout Driving Light Switch. Remove instrument panel (par. 192 **b**). Disconnect wires from terminals, and tag. Loosen switch knob set screw, and unscrew knob. Remove nut on face of panel, and remove switch. Install new switch by reverse procedure, with lock washer on rear side of panel. Position switch knob with lettering horizontal and set screw at bottom (fig. 10), and tighten set screw.

198. CIRCUIT BREAKERS.

a. To Replace Circuit Breaker. Remove instrument panel (par. 192 **b**). Disconnect wires from circuit breakers Nos. 1 and 2. Disconnect wire from right terminal on circuit breaker No. 6. Remove three nuts which attach circuit breaker plate. Lift plate up, and disconnect wire or wires on any circuit breaker to be removed, and tag. If a circuit breaker in top row is to be removed, remove all screws and attaching wires from connector strip, and tag the wires (fig. 153). Unscrew two screws which attach circuit breaker to be removed. Install new circuit breaker on plate, and assemble plate and connect wires by reversing the removal procedure. Cork gasket must be between panel face plate and circuit breaker plate. Use lock washers under the three nuts which attach plate to panel.

199. CLOCK.

a. To Replace Clock. Remove instrument panel face plate (par. 192 **b**). Take out the two screws, with lock washers, which attach socket box at right end of panel, and move box to gain access to back of clock. Remove the four lock nuts at back of clock (fig. 153), and remove the screws from face of panel (fig. 10). Lift clock out of panel. Install the new clock by reversing the removal procedure.

200. DRIVING LIGHT SWITCH.

a. To Replace Driving Light Switch. Remove instrument panel (par. 192 **b**). Disconnect and tag all wires. Loosen set screw in knob, and unscrew knob. Remove hexagon head set screw and lock washer. Hold safety lock in, and pull the bushing assembly off switch. Remove nut and lock washer against face of panel and remove switch. Position the new switch in panel. Place lock washer under nut, and tighten nut before assembling bushing. Hold bushing against panel and install hexagon head set screw with lock washer, and tighten screw. Screw switch knob all the way onto shaft with set screw at top, and tighten. Connect wires to switch with terminals under the clamps on switch terminal posts. Install instrument panel (par. 192 **c**).

201. ENGINE OIL PRESSURE GAGES.

a. To Replace Engine Oil Pressure Gage. Remove instrument panel (par. 192 **b**). Unscrew tube connection at elbow on gage while holding elbow with another wrench. Remove nuts and washer on gage strap, and slide strap off. Remove gage. To install new gage, unscrew elbow from gage removed and screw it onto gage nipple on new gage. Hold nipple with pliers. Install gage by reversing the removal procedure. Use wrench to hold elbow while tightening tube nut.

202. ENGINE TEMPERATURE GAGES.

a. To Replace Engine Temperature Gage. Remove instrument panel, and remove engine temperature gage from panel (par. 192 **b**).

Remove temperature gage bulb from water manifold (par. 108 **b**). Withdraw engine temperature gage tube from engine and fighting compartment, and remove gage and tube assembly. Install new engine temperature gage by reversing the removal procedure. Use care when threading gage tube along sponson and through fighting compartment and engine compartment bulkhead to avoid kinking and damaging tube. Hold bushing in water manifold with wrench when tightening retainer nut (par. 108 **c**).

203. FUEL AND OIL GAGE.

a. To Replace Fuel and Oil Gage. Remove instrument panel (par. 192 **b**). Unscrew two terminal nuts, and remove lock washers and wires. Unscrew and remove clamping nuts and washers and insulator strip on gage terminal screws. Lift strap off, and remove gage from face of panel. Install a new fuel and oil gage by reversing the removal procedure. Before installing a new gage, use low voltage circuit tester (17-T-5575) or test lamp, and test the fuel and oil gage resistor at top corner of panel for an open circuit. Replace resistor if defective.

204. INSTRUMENT PANEL LIGHT SWITCH.

a. To Replace Instrument Panel Light Switch. Remove instrument panel (par. 192 **b**). Disconnect wires from switch, and tag wires. Loosen set screw, and unscrew knob. Unscrew bushing on face of panel. Pull switch out of panel and remove it through the loop in the air heater fuel tube. To install new switch, position switch with lug fitting into notch in hole in panel. Screw on bushing and tighten. Turn switch stem to extreme right. Screw knob on stem, with slight clearance between knob and bushing, and tighten set screw. Connect wires to switch, with terminals on wires under clamps on terminal posts. Install instrument panel (par. 192 **c**).

205. INSTRUMENT PANEL PLUGS.

a. To Replace Instrument Panel Plug. Remove instrument panel face plate (par. 192 **b**). Take out the four screws and lock washers which hold the plug in the box. Remove the two screws with lock washers and remove box from supports (fig. 153). Pull plug out of box. Pass the wires on new plug through the square retainer plate with flat side of plate toward plug. Thread each wire on the new plug into position at the terminal from which the corresponding wire on the old plug is to be removed. Disconnect the old wires, one at a time, and connect the new ones. Remove the old plug. Position new plug in box so that the locating key, cast on inside of sleeve, is at the top, and install the four attaching screws with lock washers. Attach box to the two supports with screws and lock washers. Install instrument panel face plate (par. 192 **c**).

206. LOW OIL PRESSURE SWITCHES.

a. To Replace Low Oil Pressure Switch. Turn battery master switch off. Disconnect wire from terminal on switch. Unscrew pressure switch from tee. Install new switch. Place lock washer, then the terminal and nut on the screw, and tighten nut.

207. SPEEDOMETER, TACHOMETERS AND SHAFTS.

a. To Replace Speedometer or Tachometer. Remove instrument panel face plate (par. 192 **b**). Remove nuts and lock washers which attach strap to instrument. Lift off rubber gasket and strap. Lift instrument out of front of panel. To install the instrument, reverse the removal procedure.

b. To Replace Speedometer Shaft. Disconnect speedometer shaft from speedometer. Remove two clamps which attach speedometer shaft to front slope. Disconnect and remove speedometer shaft from adapter on transmission. To install speedometer, insert square end of speedometer cable into speedometer, and screw knurled nut on and tighten. Position speedometer shaft on front hull slope, and install two clamps. Turn transmission end of speedometer cable with fingers to make sure it turns freely. Insert driving lug on cable tip into slot in adapter shaft, push casing against adapter and tighten knurled nut.

c. To Replace Tachometer Shaft. Disconnect tachometer shaft from tachometer. Reaching through hole in bulkhead lower cover, loosen and remove hose clamp on shaft and disconnect tachometer shaft from adapter on engine (fig. 51). When removing the shaft, be careful not to lose the short tachometer drive key which may or may not pull out of the adapter when removing the shaft. Raise left generator compartment door and pull shaft through into generator compartment. Wire the adapter end of the new shaft to the tachometer end of the shaft being removed, and tape the joint to keep dirt out of new shaft. Carefully guide the new shaft while the old one is being pulled out through generator compartment. When end of new shaft is pulled into generator compartment, remove tape and disconnect old shaft. Turn cable in new shaft with fingers to make sure it turns freely, then tape end to keep out dirt. Work a wire through hole in bulkhead, in front of tachometer adapter, into generator compartment and attach to tachometer shaft. Pull shaft through to hole and remove tape. Make sure that drive key is inserted in adapter shaft, connect cable to drive key, and screw knurled nut onto adapter. Install hose clip on shaft and lower generator compartment door. Connect tachometer shaft onto tachometer.

208. TANK GAGE CONTROL SWITCH.

a. To Replace Tank Gage Control Switch. Remove instrument panel (par. 192 **b**). Remove screw and lock washer from switch handle and remove handle (fig. 10). Remove nut and lock washer on face of panel and pull switch out of panel. Remove the seven wires from the switch terminals, tagging each wire with the number at base of terminal from which it was removed. To install new switch, connect wires to their respective terminals. Position the switch on panel face plate, with terminals marked 1-2-3-4 facing left end of panel, and install lock washer and nut on face of panel. Press handle over switch shaft and turn all the way to the right. Then remove handle and place it on switch shaft, with pointer correctly alined to "R" under "LUBE" on plate (fig. 10). Install screw with lock washer and tighten. Install instrument panel face plate (par. 192 **c**).

209. TRANSMISSION OIL TEMPERATURE GAGE.

a. To Replace Transmission Oil Temperature Gage. Remove instrument panel and remove transmission oil temperature gage (par. 192 **b**). Remove oil temperature gage bulb from the tee connection on left side of transmission. Use wrench to hold bushing from turning while unscrewing retainer nut. Remove clamp on front slope and clamp to left of left steering lever, and remove gage tube with gage. Install new transmission oil temperature gage by reversing the removal procedure.

210. FUEL GAGE TANK UNIT.

a. To Replace Fuel Gage Tank Unit. Loosen fuel tank and slide it out of sponson sufficiently to remove fuel gage tank unit (par. 93 **e**). Disconnect wire from gage. Remove the screws which attach gage to tank and lift out gage (fig. 67). Install new fuel gage tank unit by reversing the removal procedure. Use new gasket on gage. Install screws with lock washers and tighten screws evenly and securely to make good ground connection for gage.

211. OIL GAGE TANK UNIT.

a. To Replace Oil Gage Tank Unit. Remove three air cleaners (par. 88 **b**) on same side as lubricating oil tank from which gage is to be removed. Disconnect wire from gage. Remove screws and lift out gage. Install new lubricating oil tank gage by reversing the removal procedure. Use new gasket on gage. Install screws with lock washers and tighten screws evenly and securely to make good ground connection for gage.

212. AIR HEATER IGNITION COILS.

a. Description. Two vibrator-type high tension ignition coils, mounted on each end of the filter panel (fig. 69), supply the ignition for the two air heaters in each engine (fig. 66).

b. To Replace Air Heater Ignition Coil. Unbolt and open engine compartment doors (par. 167 **a**). Raise and lock engine compartment splash panel (par. 168 **b**). Take out two bolts and lock washers and remove air heater coil cover. Disconnect the high tension wire and the primary lead and ground wires from the coil. Remove the two clamp bolts and slide coil out of bracket. To install coil, reverse the removal procedure.

213. EMERGENCY STOP SOLENOIDS.

a. Description. A solenoid is used to operate the emergency stop valve on each engine (fig. 64). Pressing the emergency stop button on the instrument panel energizes the solenoid which closes the stop valve against the pressure of a hold-open spring (par. 89 **a**).

b. To Replace Emergency Stop Solenoid. Raise engine compartment door (par. 167 **a**). Raise and lock splash panel (par. 168 **b**). Remove three air cleaners (par. 88 **b**). Take out cotter pin and the clevis pin which connects solenoid rod to the lever on the valve shaft. Disconnect ground and lead wires from solenoid. Remove bolts which attach solenoid to air inlet housing.

c. Installation and Adjustment of Emergency Stop Solenoid.

(1) INSTALL SOLENOID. Position the solenoid on air inlet housing and install bolt, with lock washer and flat washer, in the bracket hole toward flywheel housing. Place lock washer, flat washer, and ground wire terminal, on other bolt and install. Tighten both bolts. Attach other end of ground wire to solenoid terminal screw nearest to fan and attach lead wire to other terminal, using lock washers under the nuts, and tighten nuts.

(2) ADJUST SOLENOID. Insert clevis pin in hole in lever on valve shaft and hold lever up so that the valve is fully seated. Adjust clevis on solenoid plunger shaft so end of clevis just touches the body of the clevis pin in lever (fig. 64). This will insure sufficient travel of solenoid plunger to fully close the valve. Attach clevis to lever with clevis pin. Insert and spread cotter pin. Tighten lock nut on clevis. Press emergency stop button to test operation of solenoid and valve. Install air cleaners. Lower and hook engine compartment splash panel (par. 168 **c**). Close and bolt engine compartment doors (par. 167 **b**).

214. GENERATOR FILTER.

a. Description. The generator filter is mounted on the outside of the generator compartment near the rear universal joint cover (fig. 88). Its purpose is to eliminate radio interference caused by generators or regulators.

b. To Replace Generator Filter. Turn battery master switch off. Raise door at rear of fighting compartment floor over rear universal joint. Remove four screws which attach generator filter to bracket. Tilt filter so cover side is up, and unscrew coupling nuts on conduits (fig. 151). Remove cover screws and cover. Disconnect wires, tag for identification, and pull wires out. Install cover and screws on filter. To install a new generator filter, reverse the removal procedure, making sure wires are connected to the right terminal screws.

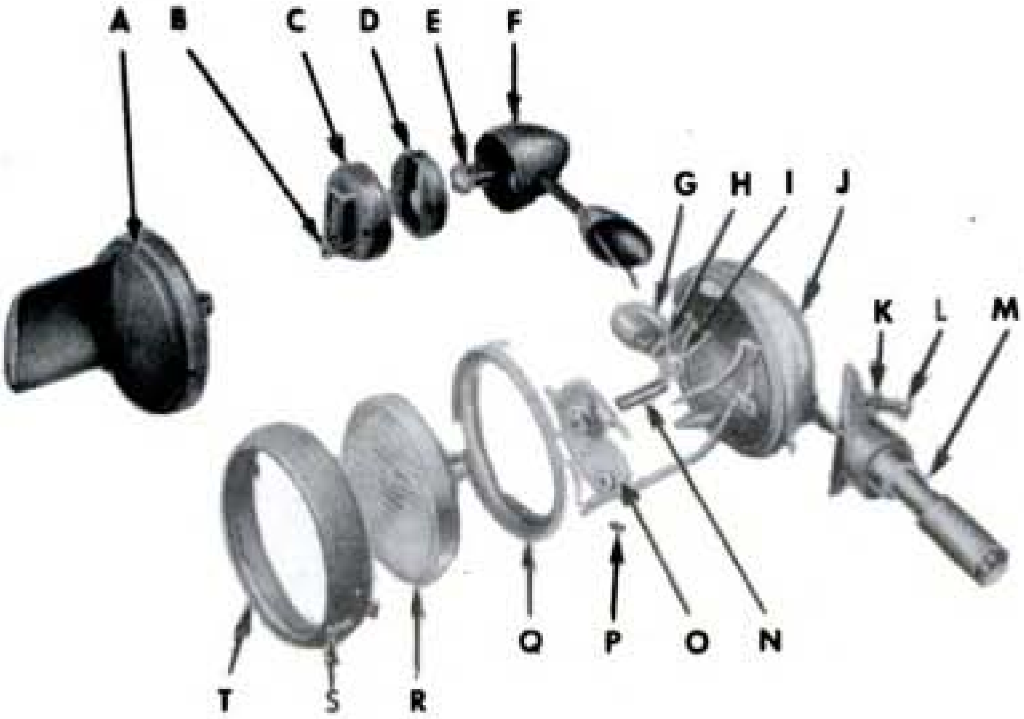

A—BLACKOUT DRIVING LIGHT LAMP-UNIT
B—SCREW
C—BLACKOUT MARKER LIGHT DOOR
D—GASKET
E—LAMP
F—BLACKOUT MARKER LIGHT BODY
G—SPACER
H—LOCKWASHER
I—NUT
J—HEADLIGHT BODY
K—LOCKWASHER
L—SCREW
M—HEADLIGHT MOUNT
N—CONNECTOR
O—HEADLIGHT STIFFENER
P—SCREW
Q—HEADLIGHT RING AND SPRING
R—HEADLIGHT LAMP-UNIT
S—SCREW
T—HEADLIGHT DOOR

RA PD 36189

Figure 155—Headlight Parts

215. VEHICLE LIGHTS.

a. Description. The vehicle is equipped with two service headlights and a blackout driving light which are stowed inside the vehicle when not in use. A white blackout marker light is attached to each headlight. The two taillights are permanently mounted. A blackout lamp-unit is mounted in the lower section of each taillight. The upper section of the left taillight contains a two-filament lamp-unit which is the service taillight and stop light. The upper section of the right taillight contains an amber blackout stop light. A dome light with built-in switch provides illumination for the drivers' compartment (fig. 7).

b. To Adjust Headlights. Loosen three bolts at rear of headlight, tilt light up or down to adjust beam, and tighten bolts (fig. 155).

A—TAILLIGHT SLEEVE
B—NUTS
C—NUT
D—TAILLIGHT MOUNTING BRACKET
E—TAILLIGHT BODY
F—STOPLIGHT LAMP-UNIT
G—TAILLIGHT DOOR
H—SCREW
I—TAILLIGHT LAMP UNIT
J—CONNECTOR WITH SOCKET
K—PLUG

RA PD 36190

Figure 156—Taillight Parts

c. To Replace Lamp-Units or Lamps.

(1) HEADLIGHTS. Remove retaining screw, pull bottom of lamp door outward and raise up to unhook. Hold door assembly and loosen terminal screw on lamp-unit and ground terminal screw on ring, and remove the two wires. Hold the assembly, pry ends of three retainer springs out of groove at rear edge of door, and remove ring and lamp-unit from door. Position new lamp-unit in door and assemble in reverse order.

(2) BLACKOUT MARKER LIGHTS. Take out door retainer screw, and lift off door and gasket. Press lamp in, turn to left to release, and remove lamp. Insert new lamp, press it in and turn to right to lock. Install door with gasket, and tighten screw.

(3) TAILLIGHT. Remove two screws and pull door off. Pull out the burned-out lamp-unit (fig. 156). Insert new lamp-unit, install door and tighten screws.

(4) DOME LIGHT. Take out two screws, and remove door. Press in on lamp and turn to left to release. Insert new lamp, install door, and tighten screws.

d. To Replace Taillights. Remove two bolts which attach taillight mounting plate to hull and hold taillight assembly. Unscrew conduit coupling nut and pull wires out to disconnect socket from plug in taillight. Wire the conduit so it cannot drop through hole to inside of hull. Hold mounting plate, unscrew locknut and nut off the taillight (fig. 156), and separate taillight from mounting plate. Assemble new taillight in reverse order.

e. To Replace Dome Light. Turn battery master switch off. Take out two screws and remove door. Disconnect wire at outer side of toggle switch. Unscrew conduit coupling nut. Remove two screws which hold dome light in place and pull dome light off the wire in the conduit. Install dome light in reverse order.

216. STOP LIGHT SWITCHES.

a. Description. The two stop light switches mounted on bracket on the left brake cover are linked to the brake levers mounted on the differential. On earlier vehicles with single anchor brakes, these switches make contact when the switch plunger moves into the switch, and pulling the plunger out breaks the contact. The switches are connected in series so that the stop light lights only when both steering brake levers are pulled back.

b. Adjustment of Stop Light Switches. Turn battery master switch on. Pull driving light switch all the way out so service stop light circuit is on. Pull both steering brake levers back 3 inches, and measure at tops of levers, and set parking brake quadrants or block levers to hold them in this position. Disconnect green lead wire from terminal on left switch and attach it to the other terminal on this same switch to take the left switch out of the circuit. Loosen lock nut on operating rod on right switch and turn adjusting nut until stop light lights. Then screw adjusting nut in opposite direction only enough so that stop light is off. Watch ammeter or have someone watch stop light. Hold the adjusting nut and tighten lock nut. Reconnect green wire to proper terminal and tighten both terminals. Disconnect the black lead wire from the right stop light switch and attach it to the other terminal on the right switch. Loosen lock nut on operating rod on left switch and turn the adjusting nut until stop light lights, then screw the nut in opposite direction only enough so that stop light is off. Hold the adjusting nut and tighten lock nut.

Reconnect black lead wire to proper terminal and tighten both terminals.

c. **To Replace Stop Light Switch.** See that driving light switch is all the way in. Disconnect two wires from switch. Remove bolts which attach switch to bracket. Disconnect stop light switch operating rod at brake lever. Install new switch, using lock washers on bracket bolts and attach wires to terminals and tighten. Connect stop light switch operating rod to brake lever, with washer between the adjusting nut and the lock nut. Turn battery master switch "ON" and pull the driving light switch all the way out. Adjust stop light switch (step **b** above).

217. LOW OIL PRESSURE MICROSWITCH.

a. **Description.** The low oil pressure microswitch mounted on the throttle lever bracket opens the circuit so that the low oil pressure warning lights are not lighted when the throttle is in "NO FUEL" position. A roller on the switch arm makes contact with the upper end of the throttle lever to open the switch when the throttle is moved into "NO FUEL" position.

b. **To Replace Low Oil Pressure Microswitch.** Take out bolts with lock washers, which attach throttle lever bracket to hull bracket and support the bracket assembly. Remove the screws and safety nuts which attach switch bracket to right side of throttle lever bracket, and remove switch and bracket. Disconnect the two wires from the switch and tag for identification. Detach the switch from bracket by removing the two safety nuts and screws. To install new switch, reverse the removal procedure. Make sure operating lever roller is squarely alined with end of throttle lever and bracket is positioned so throttle lever closes switch when moved out of "NO FUEL" position. Test switch action before installing throttle lever bracket on hull.

218. SIREN AND SIREN BUTTON.

a. **Cleaning Siren.** Blowing compressed air through the openings in siren will remove dirt unless it is caked. In this event, remove cover screws and pull cover off to clean siren rotor and housing.

b. **To Replace Siren.** Unscrew conduit coupling nut at bottom of elbow close to hull, and pull up on elbow to disconnect plug. Unscrew two bolts which attach siren to bracket and remove siren. Install siren by reverse procedure.

c. **To Replace Siren Button.** Turn battery master switch off. Disconnect wires on siren button. Remove nuts and bolts which attach siren button to bracket, and pull button out of bracket. Install siren button by reverse procedure.

219. COMPASS.

a. Earlier vehicles were equipped with a compass mounted in the turret in front of the gunner's station. Later vehicles are equipped with a pioneer combat vehicle type compass mounted in a bracket in the drivers' compartment. Information for compensating and servicing compass is contained in a separate booklet supplied with the vehicle.

220. GUN FIRING CIRCUIT BREAKER.

a. Description. A 20-ampere manually reset circuit breaker to protect the gun firing circuit is mounted in a box attached to the rear side of the left generator compartment front plate (fig. 151).

b. To Replace Gun Firing Circuit Breaker. Raise the left generator compartment door. From outside, remove the two screws which attach escutcheon plate and circuit breaker box to compartment, while supporting the circuit breaker box inside the generator compartment. Hold box and remove two screws with lock washers from cover and remove cover. Disconnect the two wires from terminals on circuit breakers. Take out the two flat head screws which attach circuit breaker to box, and remove circuit breaker. To install new circuit breaker, reverse the removal procedure.

221. GUN FIRING RELAY SWITCH.

a. Description. A gun firing relay switch was used on earlier vehicles to deliver sufficient current to operate the firing solenoid without overloading the gun firing switch or its button. The relay switch, in a box attached to the rear of the battery box (fig. 151), is operated by the gun firing buttons on the elevating handwheels.

b. To Replace Gun Firing Relay Switch. Raise fighting compartment floor doors above battery box and the rear door. Take out four screws and lock washers and remove switch box cover (fig. 151). Remove the screws which attach box to bracket. Lift box up and disconnect the three wires leading from the conduits and tag wires. Unscrew conduit coupling nuts and pull wires out of switch box. Install new relay switch by reversing the removal procedure. Test action of switch before installing box cover.

222. RADIO AND VEHICLE INTERCOMMUNICATION SYSTEM.

a. Radio. The vehicle is equipped with a SCR-610 model two-way radio, mounted on a bracket in the right front sponson (fig. 7). It is a high-frequency, voice type set with single controls which do not require a technically trained operator. The radio operates on two channels which are selected by the channel selector switch on the front of the radio panel. The other switches are the current "OFF-

ON" switches which also control volume, the inter-phone switch and the metering switch. Headsets with throat-type microphones are provided for the driver, assistant driver and gunner. Headphones and a hand-type microphone are provided for the vehicle commander. The button on microphone handle is held down while talking and released when finished with conversation. A radio control box mounted on the driving compartment roof plate permits the driver to act as relief radio operator by moving a toggle-type switch in the box. The radio master switch controls the current to the radio and vehicle intercommunication system.

b. Antenna and Base. A three-section mast-type antenna screws into the mast base which is mounted in a recess in the right upper hull plate near the front of the vehicle (fig. 4). The antenna socket is mounted on the end of a tightly wound coil spring attached to the base. The spring mounting prevents the antenna from being damaged when the gun is traversed or when passing under low branches of trees. The antenna swings down when struck and springs up when clear of the object.

c. Vehicle Intercommunication System. An intercommunication system is provided for the commander, driver, assistant driver and gunner. This system operates through the radio. One control box is mounted alongside the radio control box on the roof of drivers' compartment (fig. 7) and another control box is attached to a bracket in the center of the fighting compartment floor. The amplifier for the intercommunication system is mounted in front of the right front sponson bulkhead. Volume is controlled by operating the radio volume control.

223. WIRING SYSTEMS AND CONNECTIONS.

a. Description. A wiring system consists of a tube or shielding conduit, complete with fittings, elbows, bushings or ferrules and containing the cable or cables (wires) with terminals for the system.

b. Inspection. Any system that has broken, crushed or frayed shielding conduit, or damaged tube, or is otherwise damaged, must be replaced. Effective shielding of wires depends upon clean, tight coupling nuts. Terminals must be clean and tight for efficient functioning of all electrical units. Clean all dirty or corroded conduit connections with dry-cleaning solvent. Clean terminal screws with small wire brush to remove any corrosion or high resistance oxidation.

c. Replacement of Wiring Systems or Wires. Whenever a damaged wiring system is replaced, the wires on the new system, whenever possible, should be attached as the old wires are being removed, to avoid wrong connections. Otherwise, tag terminal screws when wires are removed. In case of doubt, refer to wiring diagrams (figs. 142 to 148). Clean all terminal screws before replacing wires. Use lock washers with all terminal nuts and tighten nuts securely. Make sure that all connections are clean and all coupling nuts are tight, to provide effective shielding.

Section XXIV

FIRE EXTINGUISHERS

224. PORTABLE FIRE EXTINGUISHERS.

a. Description. For description and operation of portable fire extinguisher, see paragraph 12.

b. Inspection of Portable Fire Extinguishers. A broken seal wire on the trigger indicates that the cylinder has been tampered with or discharged and the extinguisher must be removed from the vehicle and weighed. If the cylinder weighs ½ pound (8 ounces) less than the fully charged weight stamped on the valve, the cylinder must be replaced with a fully charged cylinder with seal wire intact. If cylinder weight is satisfactory, a new seal wire must be installed on the trigger before fire extinguisher is installed in the vehicle.

225. FIXED FIRE EXTINGUISHER SYSTEM.

a. Description. The fixed fire extinguisher system (fig. 157) provides protection against two fires in the engine compartment. It consists of two fixed fire extinguisher cylinders, each containing 10 pounds of carbon dioxide when fully charged, and connected by tubing to six nozzles in the engine compartment. The nozzles are shielded to distribute the gas effectively. The valves are equipped with remote control heads and can be operated by two pull handles mounted on the underside of the hull roof, above and to left of driver's seat (fig. 27), or by two pull handles on outside of hull at left rear of turret. The cylinders are clamped in a bracket on left side of hull inside the generator compartment. A check valve in the connection between the two cylinders and the main discharge tube prevents the gas from escaping into the crew compartment if one cylinder is operated while the other cylinder is removed. Each cylinder valve is equipped with a safety disk. If heat causes pressure in the cylinder to become too high, the cylinder will completely discharge, blowing off the red sealing cap on the safety disk outlet (fig. 29).

b. Inspection of Fixed Fire Extinguisher System.

(1) INSPECTION AND PREVENTIVE MAINTENANCE SERVICE (par. 29 **b** (16)). Inspect entire system for any mechanical damage, and

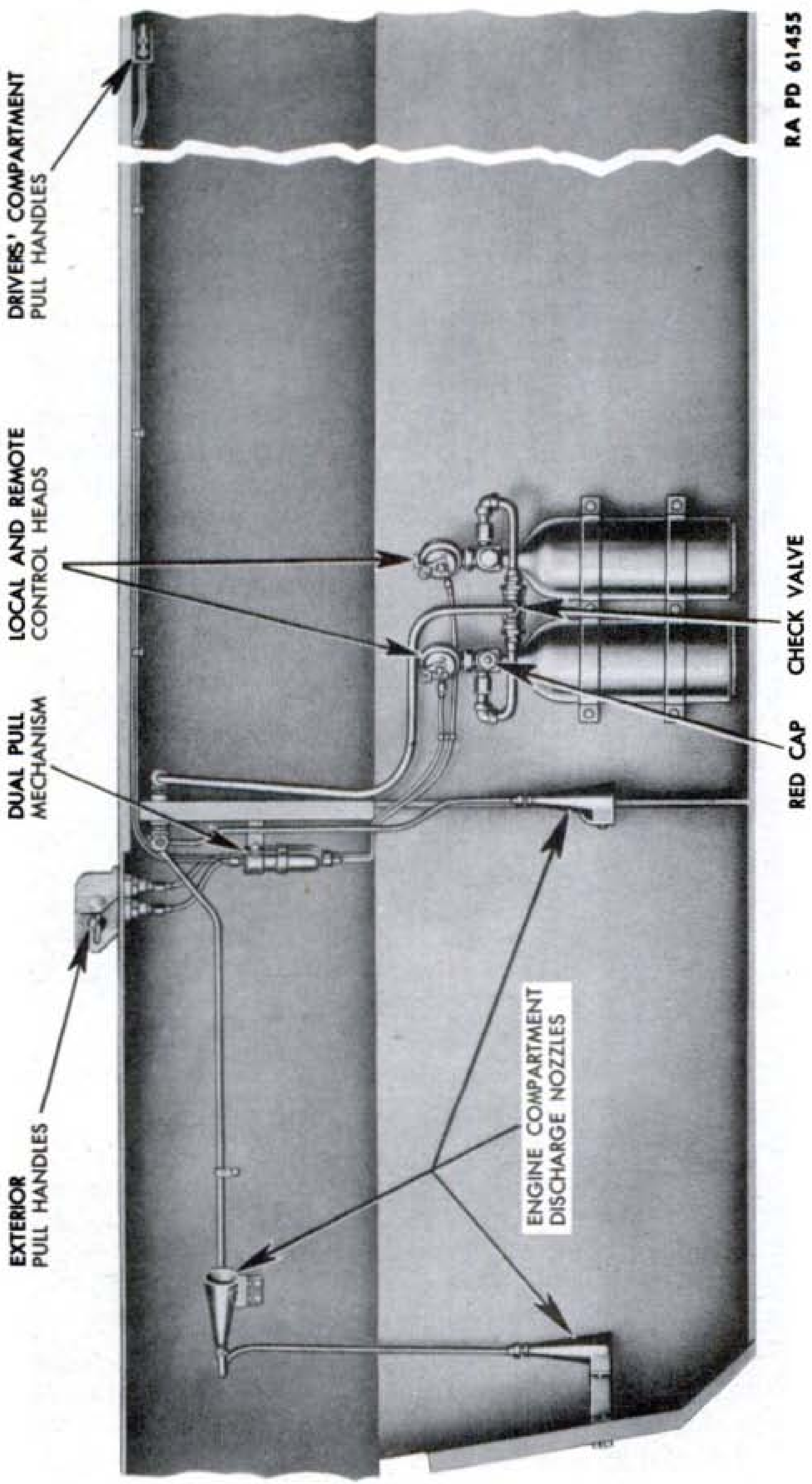

Figure 157—Fixed Fire Extinguisher System

see that shielded nozzles are intact and free of any foreign matter. See that neither of the inside or outside pull handles have been pulled out. Inspect cylinders to see that red sealing caps are in position and that seal wires on remote control head levers are intact. If red cap is missing or seal wire is broken, the cylinder must be replaced (fig. 29).

(2) ORGANIZATION AND PREVENTIVE MAINTENANCE SERVICE (par. 41, Item 60). Remove both cylinders (par. 226 **a**). Carefully weigh each cylinder. Subtract the empty weight stamped on the cylinder valve body from the weight shown by the scale. If the difference is less than 9 pounds, replace the cylinder with one that is fully charged with 10 pounds of carbon dioxide. While cylinders are removed, inspect system for any mechanical damage and loose connections. See that nozzles are free of any foreign matter. Operate both inside and outside pull handles to see that the control cables work freely, and then push handles back so they will be held in place by spring clip on handle.

226. REMOVAL OF FIXED FIRE EXTINGUISHER CYLINDERS.

a. Raise hinged cover on left generator compartment. Disconnect each remote control head from cylinder valve by unscrewing swivel nut (fig. 29). Raise remote control heads to clear cylinder valves and support them in their approximate positions with wire. Loosen flared type tubing nut on each side of check valve several turns but do not remove. Unscrew connector nut which attaches each connector tube to cylinder valve. Remove bracket clamping bolts, and lift out cylinders one at a time. While the control heads are removed from the cylinders, take out the screws which attach the cover on each control head. Using a narrow blade screwdriver, tighten the two set screws which clamp the cable in each control head.

227. INSTALLATION OF FIXED FIRE EXTINGUISHER CYLINDERS.

a. Check control heads and reset if necessary. To reset head, insert a pin or nail in hole in shaft in remote control head on side opposite to lever. Turn shaft in counterclockwise direction so that short pin in lever end of shaft is vertical and in line with arrow on remote control head casting. Inspect each cylinder to make sure red sealing cap is on valve. Install cylinders, attach and partially tighten clamps, leaving them loose enough so cylinders can be turned to aline tubing connections. Screw connector nuts to cylinder valves, and tighten. Tighten flared type tubing nuts on each side of check valve. See that seal wires in levers on remote control heads are intact. Tighten bracket clamping bolts. Lower hinged door.

228. REPLACEMENT OF FIXED FIRE EXTINGUISHER PULL CABLES OR CONDUITS.

a. Replacement of Fixed Fire Extinguisher Pull Cable. Trace the conduit, in which new cable is to be installed, from the pull handle bracket to find out which dual pull mechanism will have to be taken apart. Working in the fighting compartment and through opening in engine compartment bulkhead, unscrew conduit coupling nut at bottom of dual pull mechanism. Unscrew lower section of dual pull mechanism from upper section which is clamped to engine compartment bulkhead. Pull lower half of dual pull mechanism down to expose the twisted copper cable clamp. Squeeze the ends of the clamp open with pliers and, using pliers on both ends of clamp, untwist it. Pull cable to pull handle bracket out of conduit. Or, if new cable to remote control head is being installed, remove the control head cover (par. 226 **a**), loosen clamping screws and remove cables. Push new cable into conduit from pull handle end and, from dual pull mechanism end, pull cable taut. Install new cable clamp over ends of cable from pull handle and cable from control head. Both ends of both cables must extend out of the ends of the clamp. Squeeze both ends of clamp flat and hold one end and twist other end to clamp cables tightly.

b. Replacement of Fixed Fire Extinguisher Conduit. Disconnect cables inside dual pull mechanism (subpar. **a** above). Unscrew connectors on both ends of conduit to be replaced. If conduit is attached to remote control head, remove cover on remote control head (par. 226 **a**). Loosen the two cable clamping screws and remove cable. To install conduit, reverse the removal procedure. If cable and conduit from remote control head to dual pull mechanism is being replaced, first attach cable to remote control head before connecting the cables in the dual pull mechanism. Use new cable clamp, and twist to hold cables tightly.

PART THREE—ARMAMENT

Section XXV

INTRODUCTION

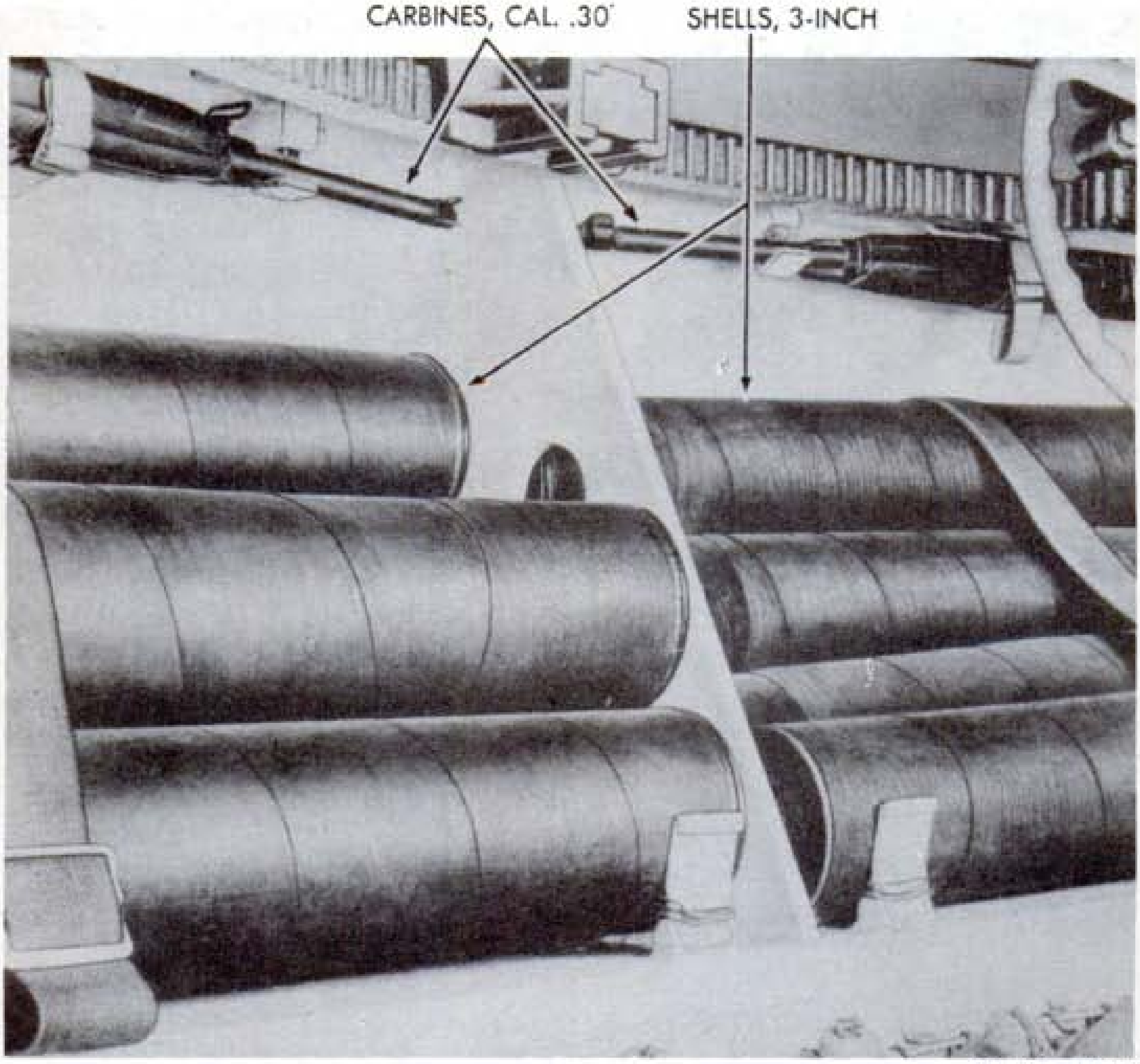

RA PD 45690

Figure 158—Ammunition and Carbines Stored Under Right Side of Turret

229. SCOPE.

a. This part of the manual is designed to guide the commander and crew in the care and handling of the 3-inch gun M7 and mount M5, mounted on gun motor carriage M10.

b. In addition to mounting the 3-inch gun M7 and mount M5, the gun motor carriage M10 mounts the caliber .50 M2, heavy barrel machine gun; Thompson submachine gun, caliber .45, and carbines, caliber .30.

c. All essential information that is of a technical character required by using arms and services for identification, use, and care of the particular equipment described, is contained in this manual, as well as use and care of ammunition, spare parts and accessories, and sighting and fire-control equipment.

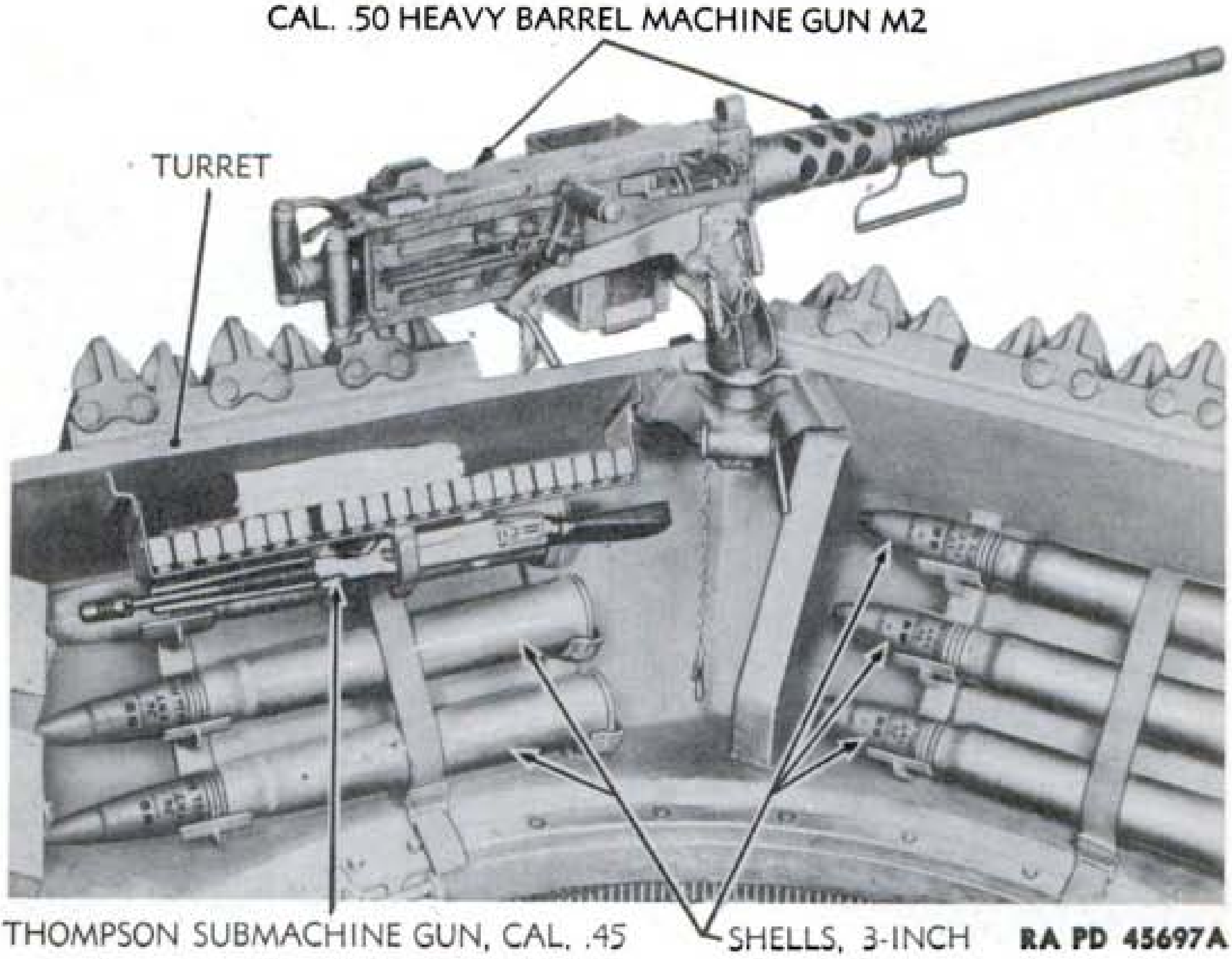

Figure 159—Rear Inside View of Turret

d. Lubrication instructions for the gun and turret are consolidated in a lubrication guide (par. 31).

e. Disassembly and assembly, and repairs by battery personnel will be undertaken only under supervision of an officer or chief mechanic.

f. In cases where the nature of repair, modification or adjustment is beyond the scope and/or facilities of battery personnel, local or otherwise designated ordnance service should be informed in order that trained personnel with suitable tools and equipment may be provided.

g. All technical manuals, field manuals, standard nomenclature lists and other publications pertaining to materiel described in this manual are listed in "References."

3-INCH GUN MOTOR CARRIAGE M10

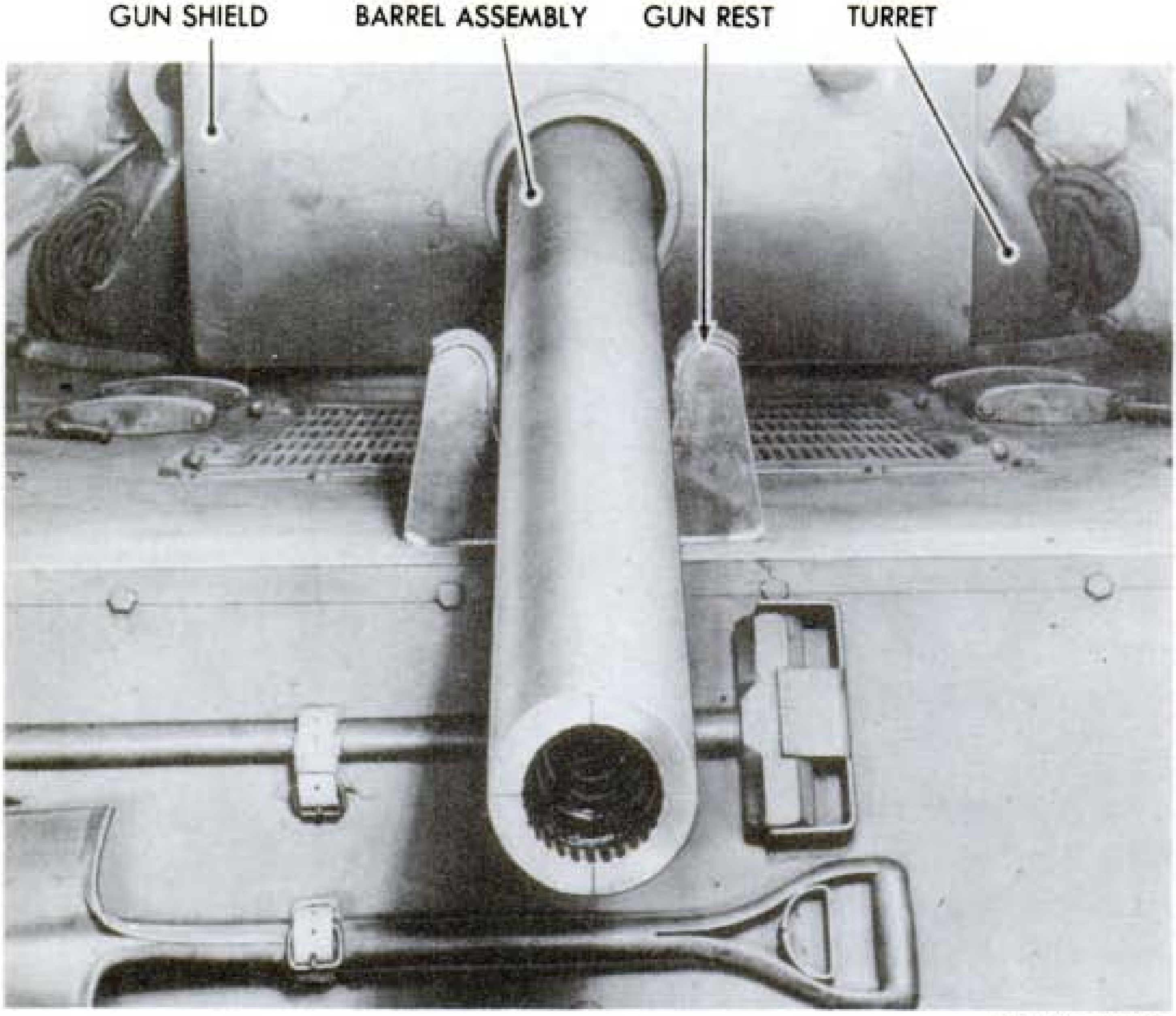

RA PD 45691

Figure 160—Rear End of Motor Carriage, M10A1

230. CHARACTERISTICS.

a. The main armament of the gun motor carriage M10 is a 3-inch gun M7 that is mounted in a gun mount M5. The gun is mounted in a semi-open-top turret of welded armor plate.

b. The 3-inch gun M7 is used as a tank destroyer. The gun has a gun shield that moves vertically with the barrel and forms the front part of the turret. The turret and gun as a unit are traversed by means of a handwheel mechanism meshing with a ring gear, thereby enabling the gun to be fired in any direction. Two traversing locks are provided to secure the turret in any desired position.

c. Elevation of the gun is by means of two elevating handwheels: one on the right, and the other on left side of cradle. The muzzle of the gun can be elevated to 30 degrees or depressed to 10 degrees.

d. There are 54 AP and HE shells stored and carried on the vehicle (figs. 158 and 159).

e. The breech can be automatically or manually opened or closed. The gun can be electrically or hand fired. Firing mechanism is usually automatically cocked but can be hand cocked by means of hand-cocking lever. All rounds are loaded by hand. It should be remembered that the driver and the assistant driver cannot open their latch doors while the 3-inch gun is pointed forward, because of interference with the gun shield. However, the gun will normally be carried with the muzzle to the rear (fig. 160), and both doors may be left open until the gun is to be directed toward the front.

f. Small arms are covered in the 23 series field manuals which are available to using troops. These weapons will not be included here.

231. DATA.

a. Gun.

Weight of 3-inch gun (M7) complete	1,990 lb
Length of bore (in calibers)	50
Length of tube, muzzle to rear face of breech ring	158.10 in.
Caliber	3 in.
Type of breechblock	Vertical-sliding
Firing chamber capacity	200 cu in.
Density of loading	0.692
Muzzle velocity	2,600 ft per sec
Muzzle energy	702.9 ft-tons
Maximum powder pressure	36,000 lb
Rifling:	
Length	126.85 in.
Number of grooves	28
Twist, uniform right-hand with one turn in calibers	40
Chamber pressure	3,200-3,600 psi
Number of grooves	28
Depth of grooves	0.04 in.
Width of grooves	0.1866 in.
Width of lands	0.15 in.

b. Ammunition.

Weight of fixed round	26.66 lb
Weight of powder charge	5 lb
Travel of projectile in barrel	127.73 in.
3-inch ammunition stored (AP and HE)	54 rounds
HE round, M42 B2, weight of projectile	12.4 lb
AP round, M62, weight of projectile	15 lb
AP round, M79, weight of projectile	15 lb
Approximate range of projectile at zero degrees of elevation	2,000 to 2,500 yd

c. Electrical.

Firing switch (in elevating handwheel)	15 amperes 24 d-c volts—normal position, open
Firing solenoid	24-volt—30 lb pull in (Maximum air gap at 20 d-c volts)

d. Mount.

Elevation of gun	30 degrees
Depression of gun	10 degrees
Traversing	360 degrees
Type of recoil mechanism	Hydrospring
Normal recoil	11 to 12 in.
Maximum recoil	14 in.
Type of recoil oil used	Oil, recoil, heavy (Spec. 2-96A)
Recoil spring compression	12 in.
Recoil spring—number of coils	20½ approximately
Recoil spring—length compressed in recoil cylinder	26.375 in.
Recoil spring—length of free spring	38.375 in.
Recoil spring tension—gun in battery	1,058 lb minimum
Recoil spring tension—gun in battery	1,136 normal
Recoil spring tension—gun in battery	1,214 lb maximum
Elevating handwheel—one revolution produces vertical movement of	0.0833 in.
Elevating handwheel—movement to raise muzzle	Clockwise
Recoil piston rod pull	10,500 lb

e. Sighting Equipment.

Telescope	M51

Section XXVI

DESCRIPTION AND FUNCTIONING OF GUN

232. GENERAL.

a. The 3-inch gun M7 consists of a tube screwed into a breech ring and then locked by a key.

b. The tube is supported and alined in a cradle that is a part of the mount assembly. The rear half of the tube is finish ground and rides in bushings inside of the cradle.

c. Lugs on the sides of the breech ring provide the means of attaching the two recoil cylinder assemblies which are a part of the gun mount. Lugs on the bottom of the breech ring are for the breechblock operating shaft and cranks. The breech closing spring mechanism is attached to a lug on right side of breech ring. Interior of breech ring is machined so that breechblock can slide upward to close and downward to open the firing chamber.

d. Gun designation, serial number, name of manufacturer, year of manufacture and weight (includes tube, breech ring, and breechblock) are stamped on the top of the breech ring.

e. Tube serial number, name of manufacturer, weight of tube with breech, and gun designation are stamped on the muzzle. The muzzle end of tube is engraved with witness lines for use with boresighting equipment.

f. Rounds are loaded by hand, and the action of loading causes automatic closing of the breech; however, the breech can be manually opened (or closed) by use of the breech operating handle which is secured to the breech operating shaft. The gun is fired electrically by means of a solenoid or manually by a hand firing lever. In either case the act of firing depresses a firing plunger on the right cheek of breech ring. The firing plunger moves the sear, thereby allowing the firing pin to function. After firing, the gun recoils and then counterrecoils to battery. During this counterrecoil the gun is cocked, breech is opened, cartridge case is extracted and breechblock is locked in its open position (firing chamber open) ready to receive the next round.

233. BARREL ASSEMBLY.

a. Tube.

(1) The tube is formed in one piece and is threaded (at the breech end) to screw into the breech ring. The bore is rifled from the chamber to the muzzle with a uniform right-hand twist of one turn in 40 calibers and the bore is also tapered to form a firing chamber. The position of the tube that rests in the cradle is finish machined, in order to assure a bearing for supporting the tube.

(2) The face of the breech end of the tube is recessed on each side of the bore to form recesses for the upper ends of the extractors when they are in battery position. Extraction of a fired cartridge case is accomplished by means of these extractors.

(3) A longitudinal breech ring key slot is machined in the circumference of the shoulder which is at the rear end of the tube and just ahead of the threads that hold the tube to the breech ring. The breech ring key is installed in this slot and locks the tube to the breech ring. The key also prevents rotation of the gun in its mount.

b. Breech Ring.

(1) The breech ring, into which the tube is screwed, has two lugs projecting from the sides. These lugs are the means of anchoring the rear ends of the recoil mechanism. A screw in the breech ring forces a copper plug into the threads of the recoil rod to secure the rod to the breech ring. Two lugs project downward from the bottom of the breech ring which are bored transversely and then fitted with bushings in order to provide bearings for the operating crank and chain terminal crank.

(2) An additional support on the lower right side of the breech ring is bored longitudinally to receive the rear end of the closing spring cylinder. Holes are tapped in the breech ring for screws to hold the closing spring cylinder, breech ring key, operating crank detent, breechblock bushing and recoil rods.

(3) Front face of breech ring has a shallow vertical keyway for the breech ring key. The front of this keyway terminates in a square notch through the front face of the breech ring, the notch alining with a keyway in the tube. The breech ring key is retained in the breech ring by two socket head set screws, thereby locking the tube to the breech ring.

(4) Near the rear of the breech ring is a rectangular recess which extends through the breech ring from top to bottom and houses and guides the breechblock. The rear side of this rectangular recess is cut out at the top to form a U-shaped notch in order to clear the cartridge case when loading and ejecting. The surface around the U-shaped opening is rounded to facilitate loading of the gun.

DESCRIPTION AND FUNCTIONING OF GUN

(5) The right side wall at the top of the breech recess is machined from the rear corner forward to provide clearance for the cocking lever arm. The cocking lever is actuated by the cocking lever arm either in automatic or manual cocking. Near the front of the inner walls of the breech ring are short curved slots (one on each side) for the purpose of guiding the outer trunnions of the extractors. Two holes in the rear face of the breech ring extend forward into the extractor trunnion recesses and house the two extractor plungers and springs. The rear ends of the two holes are threaded to accommodate the two extractor plunger plugs.

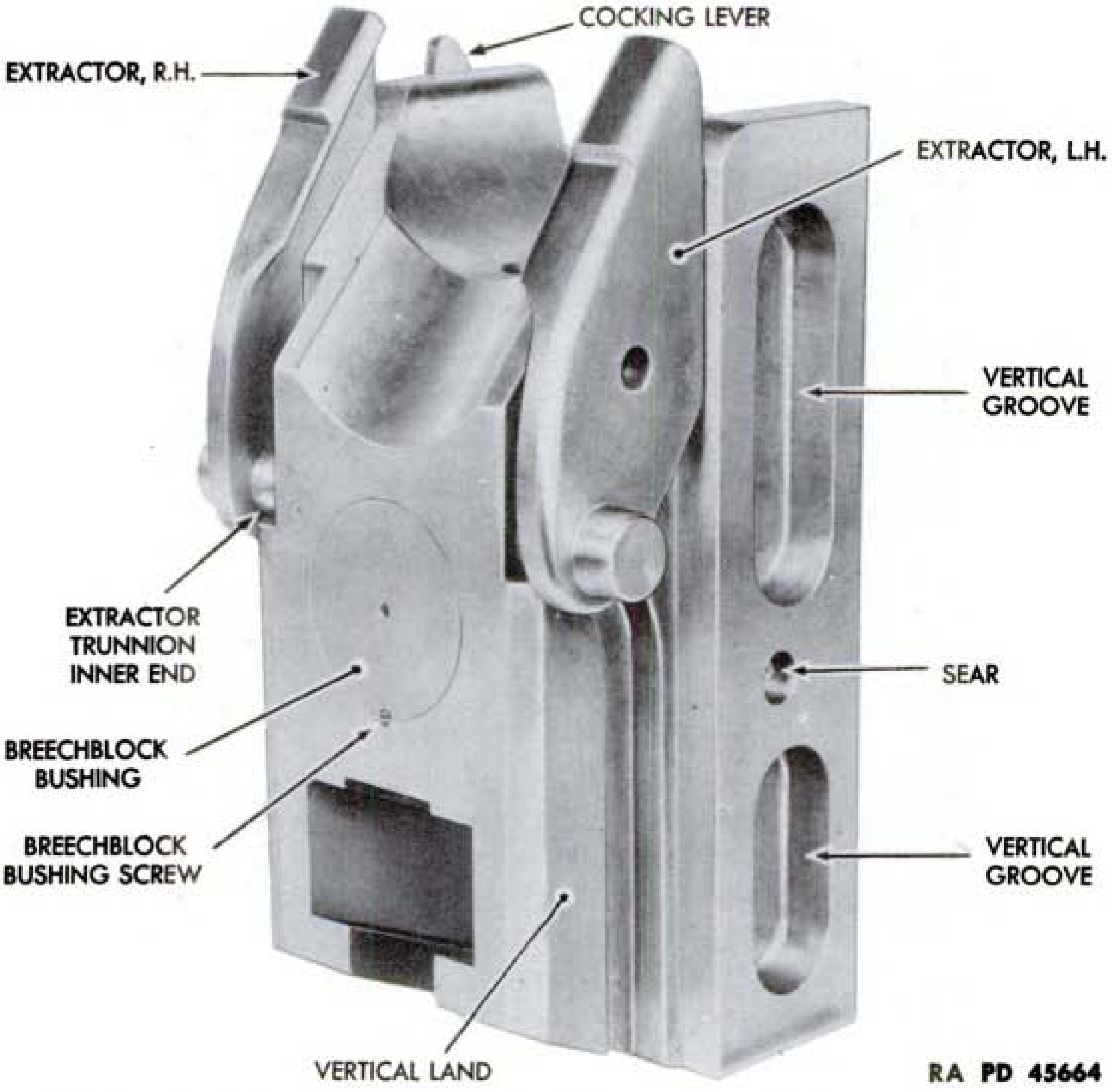

Figure 161—Breechblock and Extractors—Battery Position

(6) A hole in the right cheek of the breech ring is counterbored and threaded to receive the firing plunger and firing plunger retainer. Two tapped holes and a pilot hole near the rear of the right cheek are used to locate and attach the operating handle stop.

(7) Breech operating handle is attached to right end of the breech operating shaft and contains the operating handle latch and latch

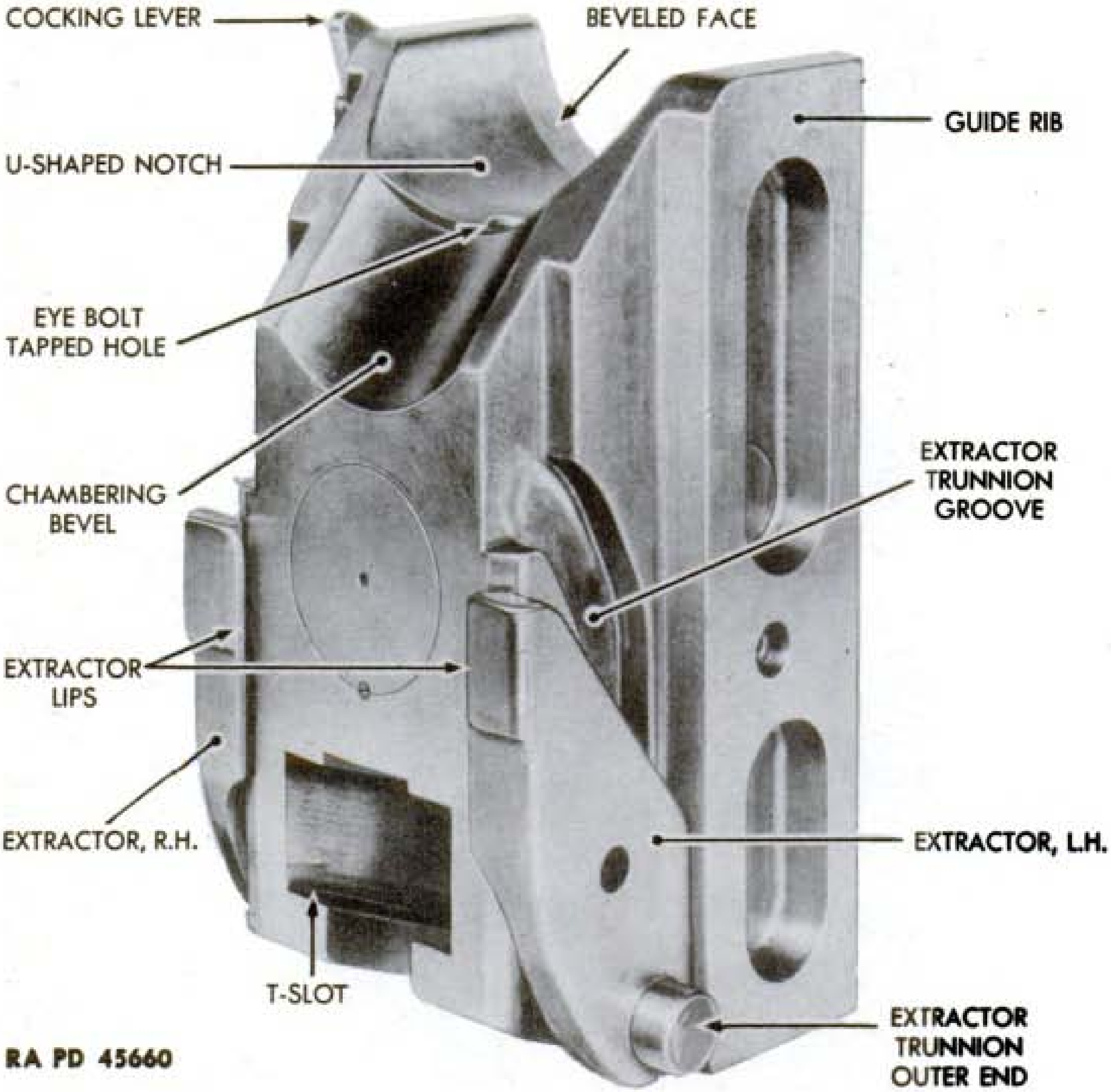

Figure 162—Breechblock and Extractors—Breech Open

spring. The function of the breech operating handle is to provide a manual means of opening or closing the breech.

(8) The breech ring provides a housing for the rear end of the tube, the breech mechanism, and the percussion firing mechanism. The rear ends of the two recoil rods and closing spring mechanism are also attached to the breech ring.

c. Breech Ring Key. The rectangular breech ring key fits in a keyway in front face of breech ring and also engages a key seat in the tube.

234. BREECH MECHANISM.

a. General.

(1) The breech mechanism consists of a breechblock with percussion firing mechanism, breech operating shaft with the breechblock operating crank, chain terminal crank and operating crank.

(2) The functions of this breech mechanism are, first, to close the rear end of the chambers after loading; second, to fire the round of ammunition after it has been inserted, and finally, to extract the empty cartridge case from the firing chamber.

b. Breechblock.

(1) The breechblock is of the vertical sliding type and has a guide rib on each side which slides in a corresponding groove in each side of the breech ring recess (figs. 161 and 162).

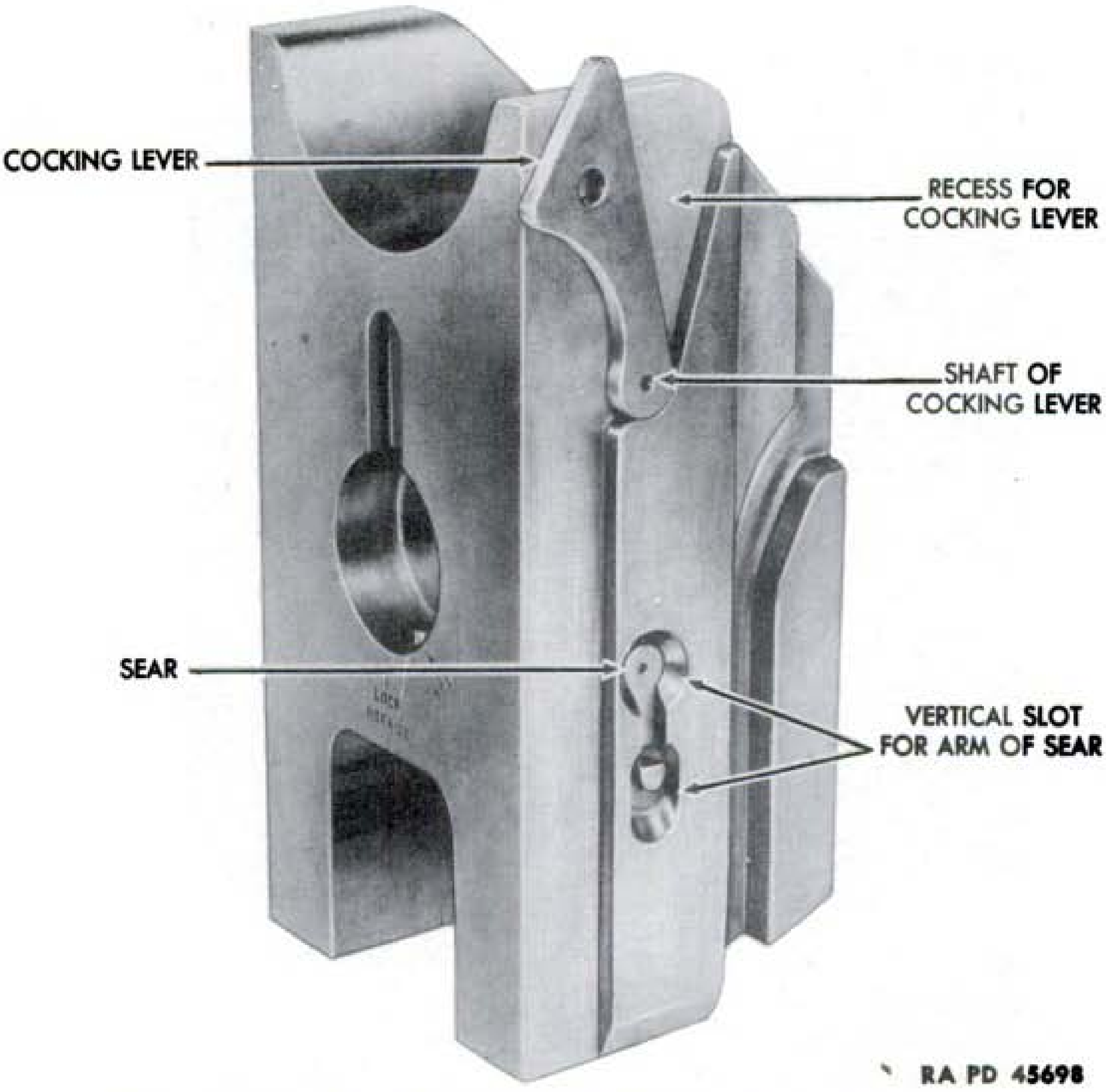

Figure 163—Rear Right Quarter View of Breechblock

(2) The top of the breechblock is U-shaped in order to guide the cartridge into the firing chamber (at rear end of tube). This U-shaped notch is alined with the bottom of the U-shaped notch in the breech ring so that the cartridge case is cleared when the breechblock is in its lowered position. The upper front edge of the top of the breechblock is beveled in order to drive the cartridge into the firing chamber as the breechblock is raised. The rear face of the breechblock, the

guide ribs of the breechblock, the grooves in the breech ring (for the guide ribs of the breechblock), and the rear wall of the breech ring recess, are all inclined so that when the breechblock rises, it also moves forward and thereby completes the seating (chambering) of the round in the firing chamber (figs. 161 and 162).

(3) The bottom of the breechblock contains an inclined T-slot in which cross heads of the breechblock operating crank slide in order to raise or lower the breechblock assembly (figs. 161 and 162).

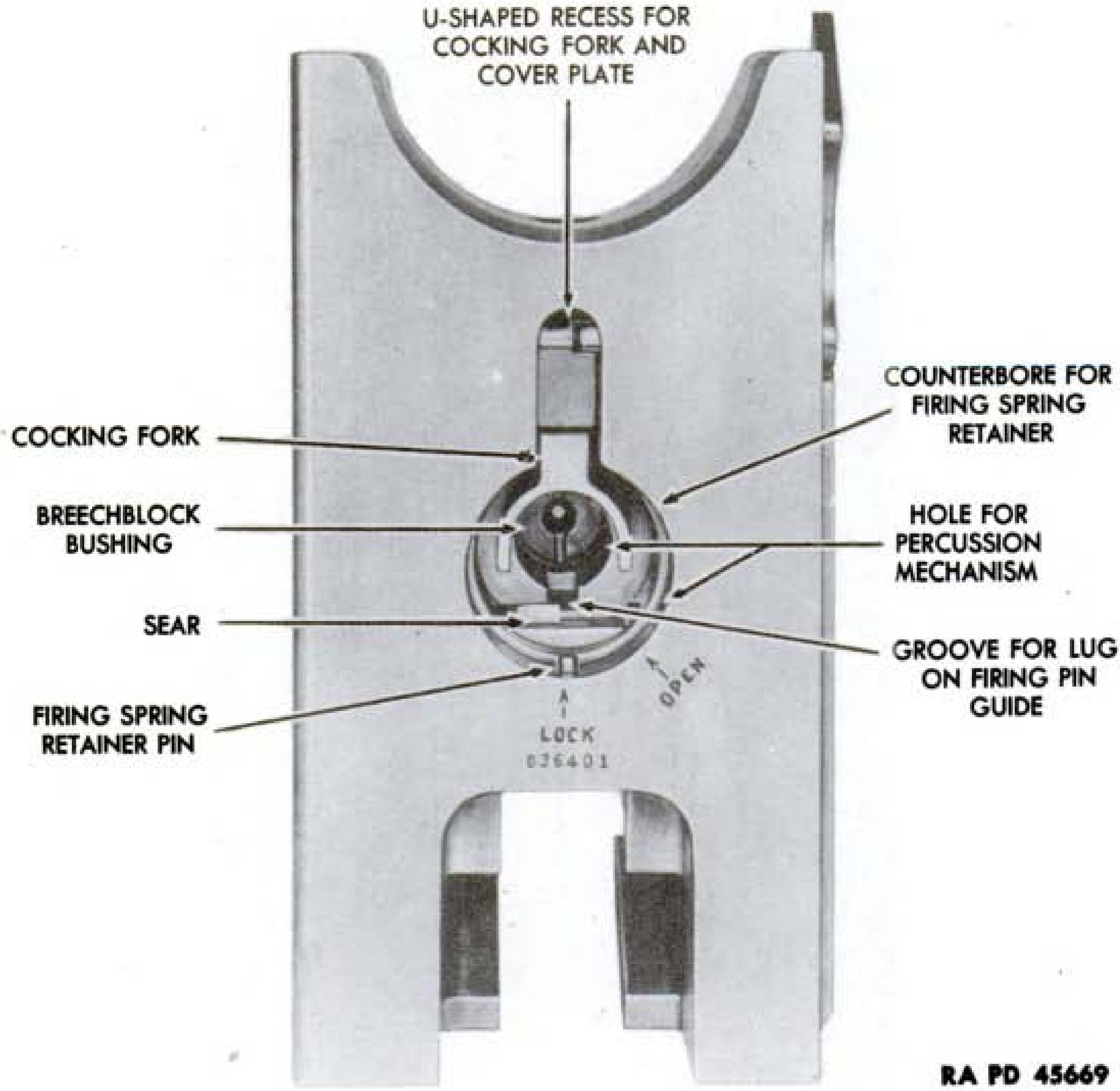

RA PD 45669

Figure 164—Rear View of Breechblock

(4) In each side of the breechblock is a groove in which the inner ends of the extractor trunnions of the two extractors slide. The lower ends of these grooves are parallel to the breechblock guides; however, the upper ends curve toward the breechblock front face in order to impart an accelerated motion to the extractors when extracting and ejecting a fired cartridge case (fig. 161 and 162).

(5) There are flats on the vertical lands (on each side of the breechblock). These lands provide a surface for corresponding flats on the inner trunnions of the extractors. The breechblock is locked in its open position when the flats of the inner trunnions of the extractors are on the flat portion of the vertical lands of the breechblock (figs. 161 and 162).

(6) A hole which is bored through the center of the breechblock houses the percussion firing mechanism (fig. 164). The forward end of this hole is counterbored and threaded for a breechblock bushing which is retained in the breechblock by a breechblock bushing screw. The central part of the hole has a longitudinal groove for a lug that is on the firing pin guide; and at the rear of the hole, the breechblock is counterbored to house the firing spring retainer. The upper side of this counterbore has an inverted U-shaped recess to house the cocking fork plunger, spring and cover plate. A small vertical hole in the bottom of the counterbore and toward the rear is for a firing spring retainer pin. This pin and the cover plate lock the firing spring retainer in the breechblock. Arrows are engraved on the rear face of the breechblock to show the "LOCK" and "OPEN" positions of the firing spring retainer.

(7) A transverse hole bored through the breechblock (fig. 163) intersects the lower side of the central bore and is for housing the sear, sear spring, and sear retainer. The left end of this transverse hole is counterbored to form a seat for the U-shaped sear retainer. The right end of the transverse hole has a vertical slot for the arm of the sear (fig. 164).

(8) A V-shaped recess in the upper right rear side of the breechblock is to provide clearance between the breechblock and breech ring for the cocking lever. A transverse bore from this V-shaped recess extends into the central recess. This transverse bore is the bearing for the shaft of the cocking lever (fig. 163).

(9) The weight of the breechblock is reduced by cutting vertical grooves into each side of the breechblock (fig. 161). A tapped hole in the top of the breechblock is for an eyebolt to facilitate removing or installing the breechblock in the breech ring (fig. 162).

c. **Extractors** (figs. 161 and 162).

(1) The right and left extractors are short, heavy levers that are supported vertically between the sides of the breechblock and the sidewalls of the breech ring recess.

(2) Each side of the lower end of the extractor carries a trunnion that projects outward and inward from the extractor (figs. 161 and 162). The outer trunnions are located in short curved grooves in the walls of the breech ring recess; and these outer trunnions prevent any vertical movements of the extractors. The inner trunnions slide in curved grooves in the sides of the breechblock; and as the breech-

block is raised or lowered, these inner trunnions are forced forward or backward by the curve of the grooves assisted by the extractor spring plungers for the extraction of a cartridge case. The forward edge of each extractor has a radius that rides against the front face of the breech ring and assists in the control of the extractors.

(3) The function of the extractors is to extract and eject a cartridge case. This is accomplished by means of the inward projecting lips on the upper ends of the extractors which lie in recesses in the breech face of the tube and under the rim of the cartridge when the breech is closed. When the lower ends of the extractors are forced forward by the downward or opening movement of the breechblock, the extractor upper ends and lips are rocked rearward, thereby prying the cartridge case out of the firing chamber.

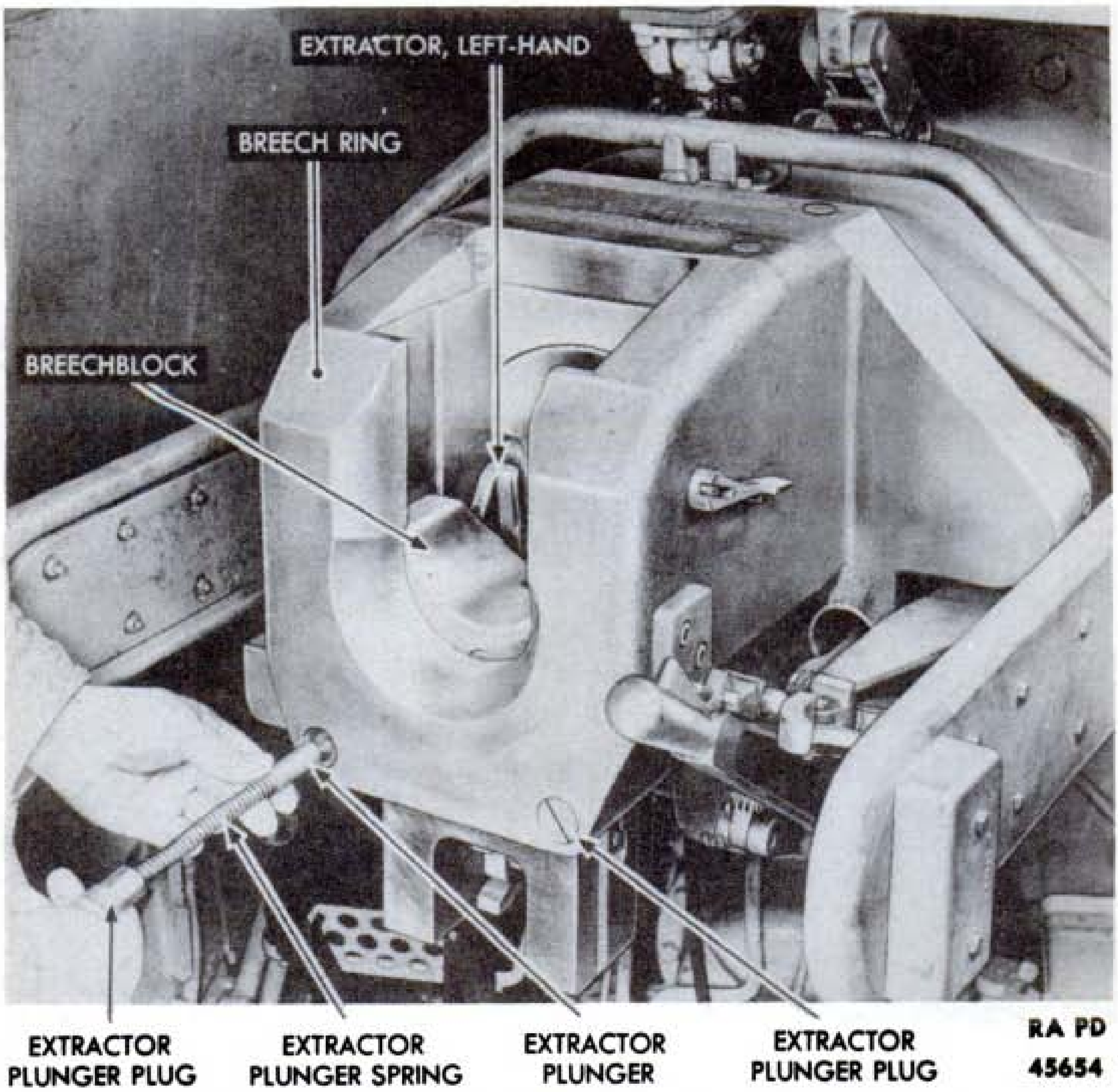

Figure 165—Extractor Plunger, Spring and Plug

d. Extractor Plungers.

(1) Small cylindrical extractor plungers slide in longitudinal

holes that extend from the rear face of the breech ring to extractor trunnion pockets in the sidewalls of the breech ring recess. Extractor plunger springs are in the rear ends of these holes. These springs bear rearward against extractor plunger plugs that are screwed into the holes. The extractor plunger plugs press the extractor plunger springs against the extractor plungers and these plungers press against the outer trunnions of the extractors.

(2) The function of the extractor plungers is to assure the positive locking of the breechblock in its open position. This is accomplished by the extractor plungers pressing the outer trunnions of the extractors forward until the flats on inner trunnions are on the flats of the vertical lands which are on the breechblock.

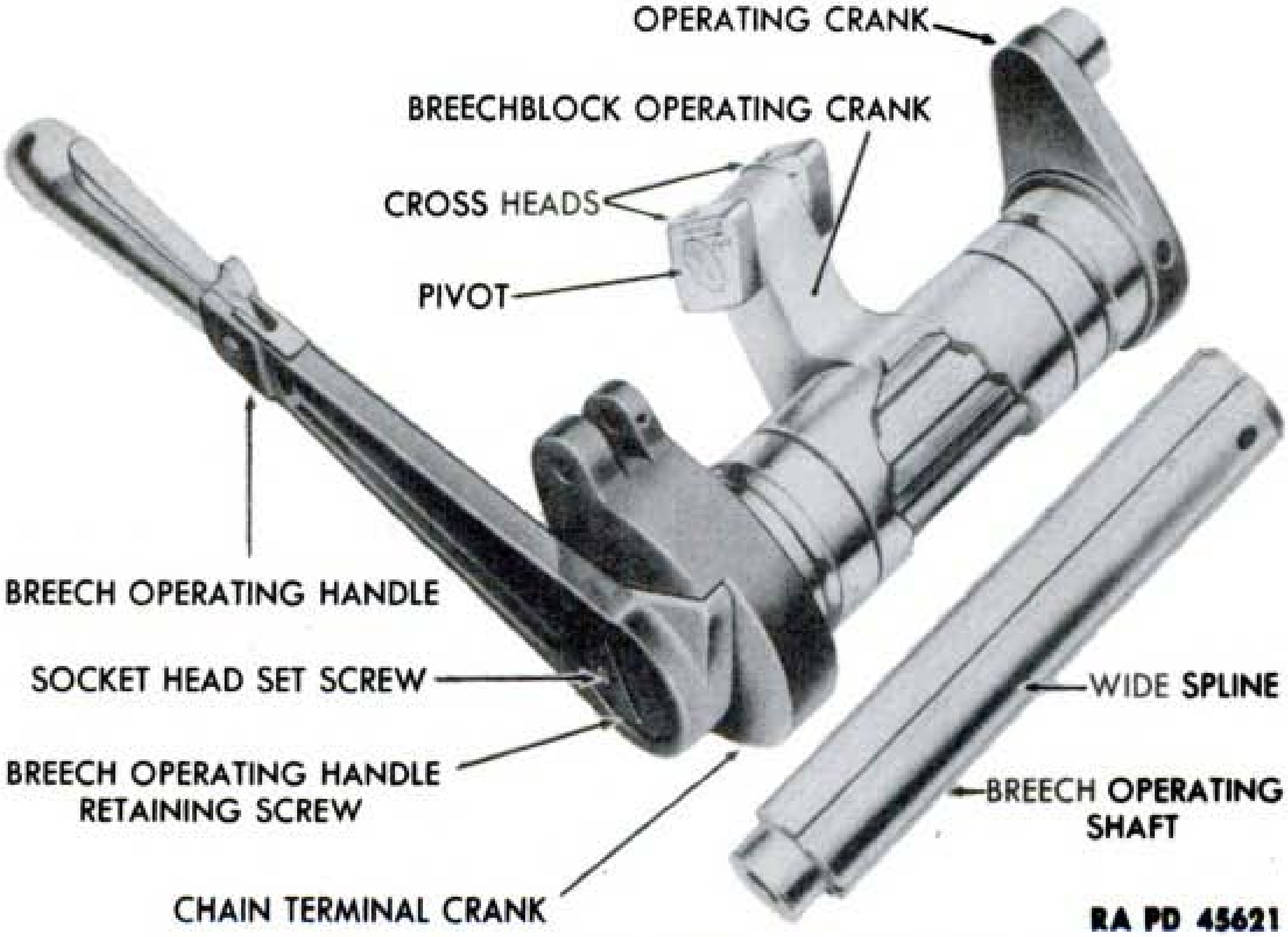

Figure 166—Breech Operating Shaft and Cranks

e. Breech Operating Shaft (fig. 166).

(1) The breech operating shaft provides a means of connecting and operating the three cranks (operating crank, chain terminal crank, and breechblock operating crank) in order to cause them to rotate as a unit.

(2) There is an extra wide spline or land on the breech operating shaft that mates with a groove of the same width in the hub of each of the three cranks. The three cranks cannot be incorrectly installed or misalined with each other.

(3) The shoulder and hole on the right end of the breech operating shaft are provided for the attaching of the breech operating handle by means of a breech operating handle retaining screw and a socket head set screw. The left end of the shaft is drilled, radially, to provide a seat for the operating shaft detent and to house the operating shaft plunger. The small hole in the end of the shaft is for the plunger retaining screw.

f. Breechblock Operating Crank (fig. 166).

(1) The breechblock operating crank consists of an internally splined hub which slides on the central part of the breech operating shaft, in between the bottom lugs on the breech ring. The breechblock operating crank is, therefore, both supported and actuated by the breech operating shaft.

(2) A central lever arm on the breechblock operating crank extends rearward and upward, terminating in a pivot that extends to the right and to the left. On the pivot are two bronze cross heads that engage and slide in the T-slot in the breechblock.

(3) A small hole in the cross head extends from the upper and lower surfaces to the pivot hole to provide for the passage of lubricant An arrow and words "MUZZLE FACE" are engaged on each cross head to insure the correct installing of the cross heads on the pivot.

(4) The hub of the breechblock operating crank has a lug that projects rearward and contacts a stop surface on the bottom of the breech ring in order to limit the downward travel of the breechblock.

(5) The function of the breechblock operating crank is to provide a means of actuating the breechblock into an open or closed position.

g. Operating Crank (fig. 166).

(1) Operating crank consists of a hub that is internally splined. Externally, the crank has a cylindrical machined surface, except for a short integral lever which extends upward and has a terminal lug projecting outward for actuation by an operating crank ejector cam located on the cradle.

(2) Splined interior of hub slides onto the left end of the splined breech operating shaft while the cylindrical exterior surface is supported in a bronze bushing in the transverse bore of a lug on the breech ring.

(3) On the cylindrical-machined surface of the operating crank is an annular groove that enables an operating crank detent (screwed into the breech ring so as to engage in the annular groove) to maintain the position of the operating crank.

(4) The hub of the operating crank is drilled and counterbored radially for the breech operating shaft detent and breech operating

shaft detent spring, to retain the breech operating shaft in its position in the breech ring.

(5) The function of the operating crank is to open the breech and eject the cartridge case, automatically, when contacted by the operating crank ejector cam during the recoil and counterrecoil of the barrel.

h. Chain Terminal Crank (fig. 166).

(1) The chain terminal crank consists of a hub that is internally splined and externally has a cylindrical machined surface except for a short integral lever extending upward and terminating in a fork for attaching the chain terminal of the breech closing spring mechanism.

(2) Splined interior of hub slides onto the right end of the splined breech operating shaft while the cylindrical exterior surface is supported in a bronze bushing in the transverse bore of a lug on the breech ring.

(3) In the cylindrical machined surface of the operating crank is an annular groove that enables an operating crank detent (screwed into the breech ring so as to engage in an annular groove) to maintain the position of the chain operating crank.

(4) The function of the chain terminal crank is to provide a means by which the breech closing spring mechanism can raise the breechblock into a closed position.

i. Firing Plunger. The firing plunger is cylindrical in form with an integral collar near the middle of the plunger. The firing plunger is retained in a bored hole through the right side of the breech ring (fig. 161). The flat inner end of the firing plunger is in alinement with an arm on the sear when the breechblock is in its closed position. The rounded outer end of the firing plunger projects outward from the breech ring so that it can be operated by the firing mechanism on the mount. The firing plunger is held in the breech ring by firing plunger retainer.

235. CLOSING SPRING MECHANISM.

a. General. Closing spring mechanism consists of a coil spring on a piston rod which has a piston on its forward end and a chain on its rearward end. The entire assembly is housed in a closing spring cylinder.

b. Construction (fig. 167).

(1) The closing spring cylinder is attached at its rear end (by screws) to a lug that is a part of the breech ring. A shoulder inside the closing spring cylinder forms a seat for the closing spring.

(2) The piston rod is drilled and slotted at its rear end for attaching it to the piston rod chain by means of a link pin and cotter

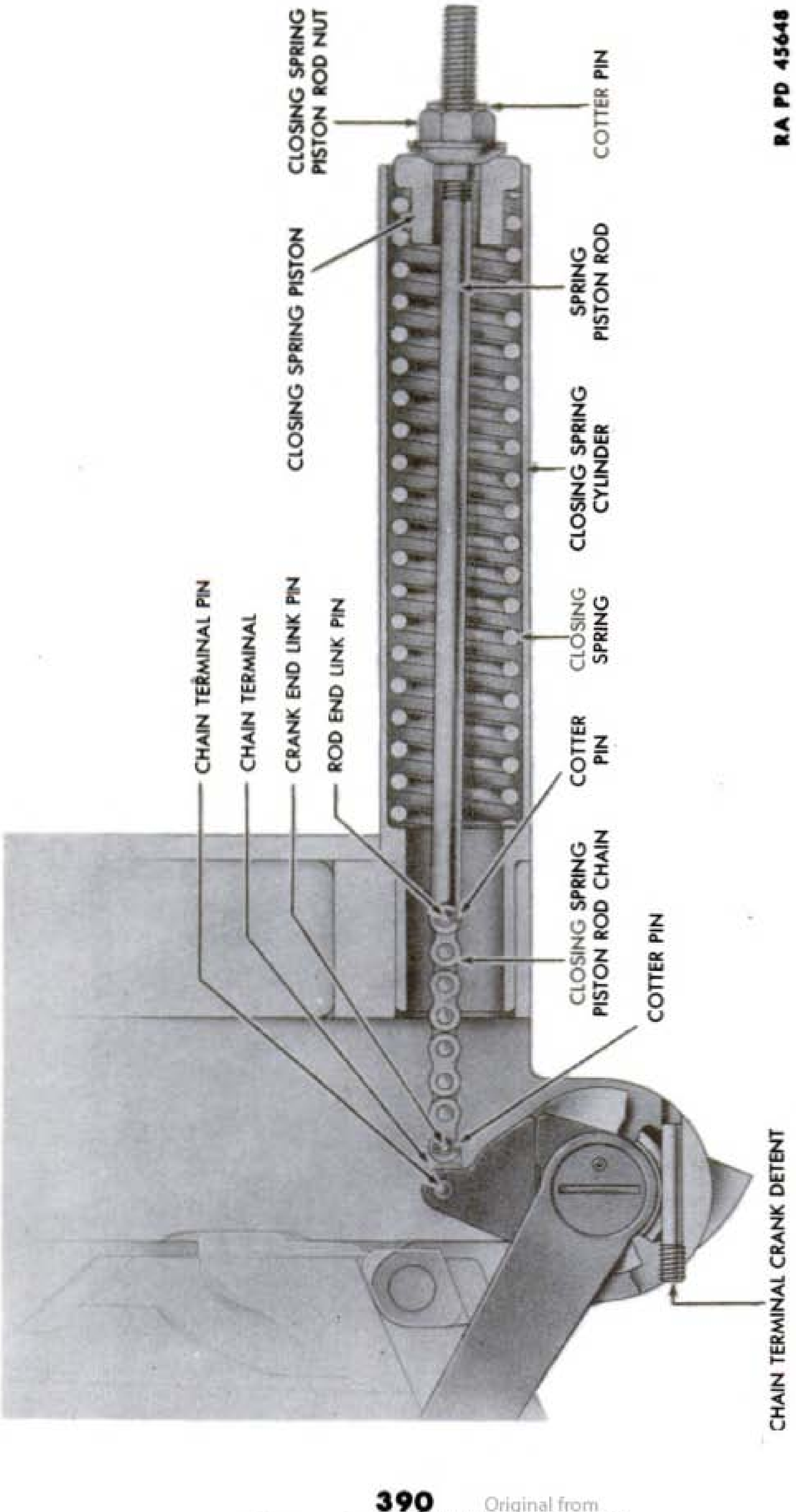

RA PD 45648

Figure 167—Closing Spring Mechanism

pin. The front end of the piston rod is threaded for the closing spring piston rod nut and a series of holes are equally spaced along this threaded part of the rod so that the piston rod nut can be adjusted and then secured by means of a cotter pin. Adjustment of the breechblock closing action is accomplished by turning the closing spring piston rod nut up or down on the piston rod and inserting the cotter pin in a different hole.

(3) The closing spring piston fits freely inside the closing spring cylinder and the piston is centrally bored for a loose encirclement of the piston rod. A shoulder at the front end of the piston provides a seat for the closing spring.

(4) The closing spring piston rod nut is tapped to screw onto the piston rod, and the rear end of the nut is machined to form a cylindrical sleeve that projects into the closing spring piston to maintain alinement of the nut and piston. The forward end of the nut is hexagon to provide a means of adjustment of breechblock closing action.

(5) The closing spring is a heavy helical compression spring. The chain is a commercial steel leaf or balance chain. The chain terminal is a small steel block which is tapered in thickness having the thinner end slotted and drilled for attachment to the chain terminal crank by means of a link pin.

c. Function.

(1) The function of the closing spring mechanism is to close the breech. This is accomplished by compressing the closing spring and using the force of the compressed spring. When the breech operating shaft and the chain terminal crank are rotated, the closing spring piston is pulled rearward and into the closing spring cylinder.

(2) The closing spring piston compresses the closing spring which closes the breech as soon as the extractors are off the flats of the breechblock vertical lands. Insertion of a round in the firing chamber or manual release pushes the extractors off their locked position, and allows closing spring to function and close the breech.

236. PERCUSSION AND COCKING MECHANISM.

a. General (fig. 168).

(1) The percussion mechanism consists of the firing pin guide, firing pin, firing pin retracting spring, firing spring stop and firing pin guide pin. The cocking mechanism consists of the cocking lever, cover plate, cocking fork plunger, cocking fork plunger spring and cocking fork.

(2) The firing pin guide is a cylindrical cup which slides backward and forward in the central bore of the breechblock, with the closed end of the guide facing forward. The firing pin guide contains

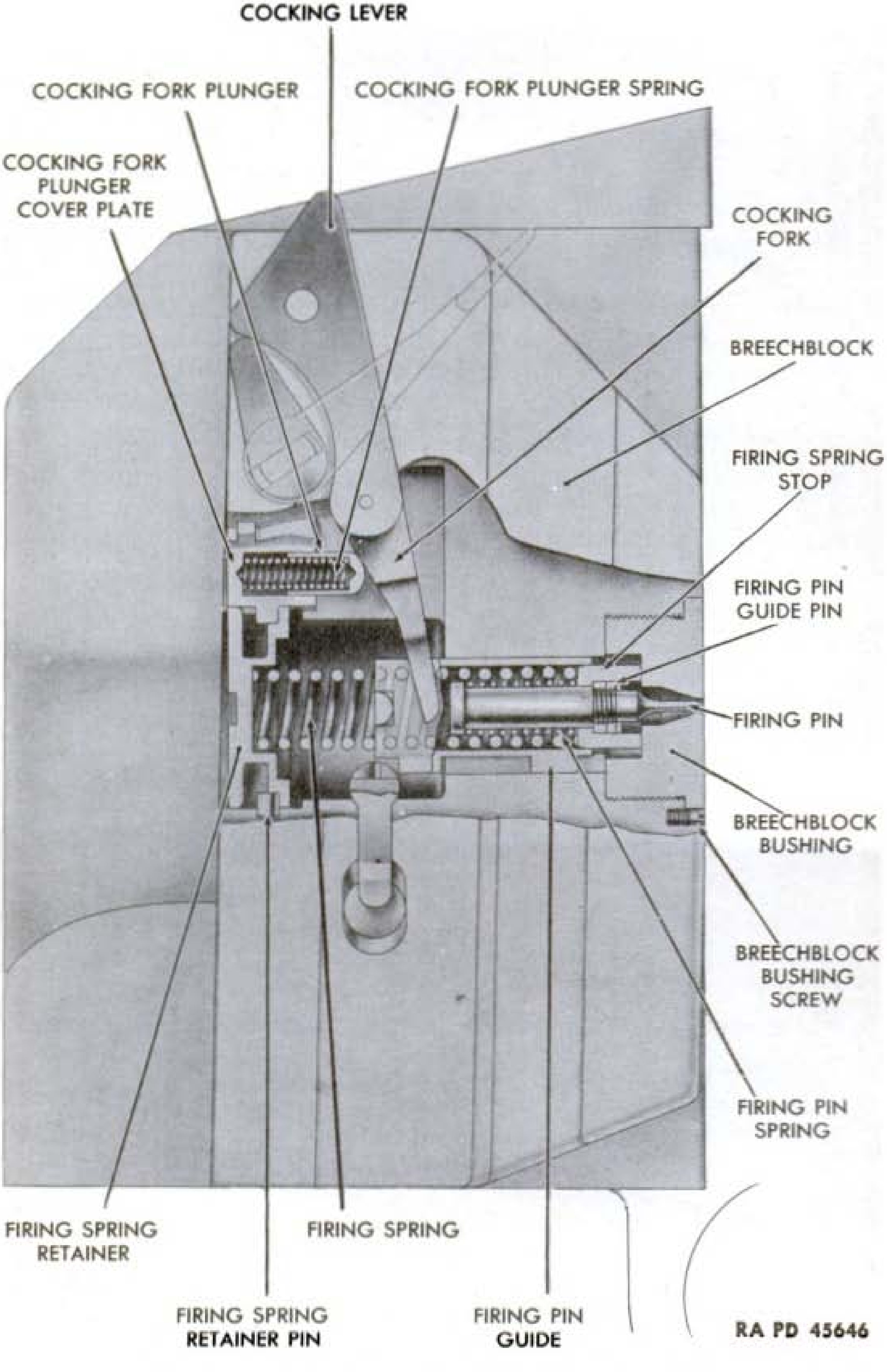

Figure 168—Firing Mechanism Assembly

the firing pin, firing pin retracting spring, firing pin guide pin, firing spring stop and the forward end of the firing spring.

(3) There are four exterior lugs on the firing pin guide. The larger of the two on the lower side of the guide serves for engagement with the sear, while the smaller lug near the front acts as a guide in the groove of the breechblock bore. Two lugs on the rear of the firing pin guide extend outward so that the cocking fork engages them and thus actuates the guide to cock the gun.

b. Construction (fig. 168).

(1) The firing pin is a shouldered screw having a slotted head and a small cylindrical flat point. The firing pin is installed from the rear end of the firing pin guide and then screwed into the front end of the guide. The firing pin guide pin is inserted through a hole in the firing pin and firing pin guide, thereby securing each part to the other.

(2) The firing spring stop is a ring having two projections protruding from its front face. These projections fit freely in two openings in the front end of the firing pin guide. The firing spring stop is held in a forward position by the firing pin retracting spring. The purpose of the stop is to maintain clearance between the firing pin and the cartridge.

(3) The firing pin retracting spring is a light helical compression spring mounted on the body of the firing pin. The spring bears against the head of the firing pin and against the firing spring stop, maintaining a constant pressure against the stop to force it against the forward end of the firing pin guide.

(4) The firing spring is a helical compression spring extending into the rear end of the firing pin guide and resting against the firing spring stop. The rear end of the spring seats in a recess in the firing spring retainer. The firing spring forces the firing pin guide and firing pin forward to fire the round whenever the sear is released by the act of firing.

(5) The firing spring retainer is a cylindrical plug that closes the rear end of the central bore in the breechblock. The forward end of the retainer is recessed to form a seat for the firing spring. A groove is cut in the circumference of the retainer, forming a front and rear land. The front land is notched to engage a firing spring retainer pin (in breechblock) and also to engage a lug that is on the cover plate. The rear face of the retainer is slotted to facilitate removal and replacement of the retainer. The rear face of the retainer is marked with an arrow on the lower vertical centerline that alines with the word "OPEN" or the word "LOCK" (on rear face of breechblock) (fig. 164) to remove or install the percussion mechanism.

(6) The sear is a cylindrical bar which slides transversely in the breechblock and engages a lug on the firing pin guide for the purpose of holding the percussion mechanism in its cocked position. The

sear is notched where it engages the lug on the firing pin guide and release of the percussion mechanism to fire the round is accomplished by moving the sear endwise, out of engagement with the firing pin guide.

(7) The cocking fork consists of a hub with a forked arm which straddles the firing pin guide. The cocking fork contacts lugs on each side of the firing pin guide. When the percussion mechanism is moved rearward to its cocked position, it is the cocking fork that forces the percussion mechanism rearward. The cocking fork pivots on the cocking lever and is keyed to the inner end of the lever.

(8) The cocking lever consists of a cylindrical shaft which is flattened at one end to fit into the hub of the cocking fork. The opposite end of the cocking lever is formed into a curved arm. The cylindrical shaft end of the cocking lever operates in a transverse bore in the breechblock. The curved arm end of the cocking lever extends upward also toward the rear and is located between the right side of the breechblock (fig. 163) and the breech ring. Automatic cocking of the percussion mechanism is obtained by lowering (opening) the breechblock which causes the cocking lever to ride over a cam surface of the cocking arm.

(9) The cover plate closes the rear opening (above the firing spring retainer) of the recess in the breechblock. A curved portion at the top of the cover plate fits the recess in the breechblock and a concave lower edge of the cover plate rests against the firing spring retainer. Flanges on both sides of the cover plate engage grooves on the inner wall of the recess in the breechblock. A lug which projects downward from the bottom of the cover plate retains the upper side of the firing spring retainer. The front face of the cover plate is drilled in order to house the cocking fork plunger and spring.

(10) The cocking fork plunger is a cylindrical plug which presses forward on the lower side of the cocking fork hub, thereby returning the cocking fork and cocking lever to their uncocked position as soon as the cocking lever is released. The cocking fork plunger is drilled to receive the cocking fork plunger spring which rests against the cover plate and presses forward on the cocking fork plunger.

(11) The function of the percussion mechanism is to provide a means of moving a firing pin forward to strike the cartridge primer. The function of the cocking mechanism is to provide an automatic means of moving the percussion mechanism into its cocked position after a round has been fired. The opening of the breechblock moves the cocking lever to which the cocking fork is keyed. The cocking fork moves the percussion mechanism rearward where the sear engages and holds the percussion mechanism in a cocked position until the firing plunger is moved by either electric or hand firing. The firing plunger then pushes in on the sear thereby releasing the per-

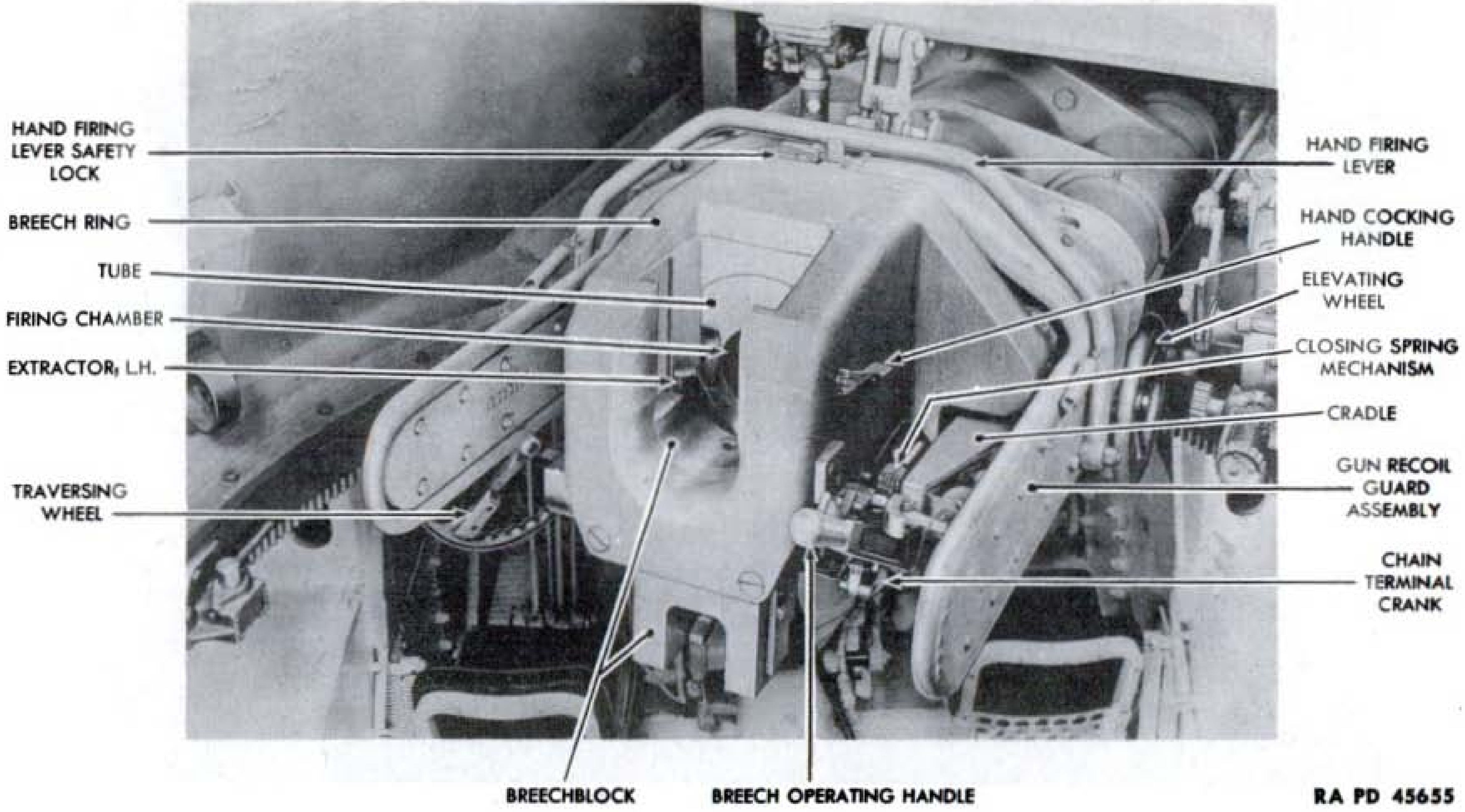

RA PD 45655

Figure 169—Right Quarter View of Breech End of Gun

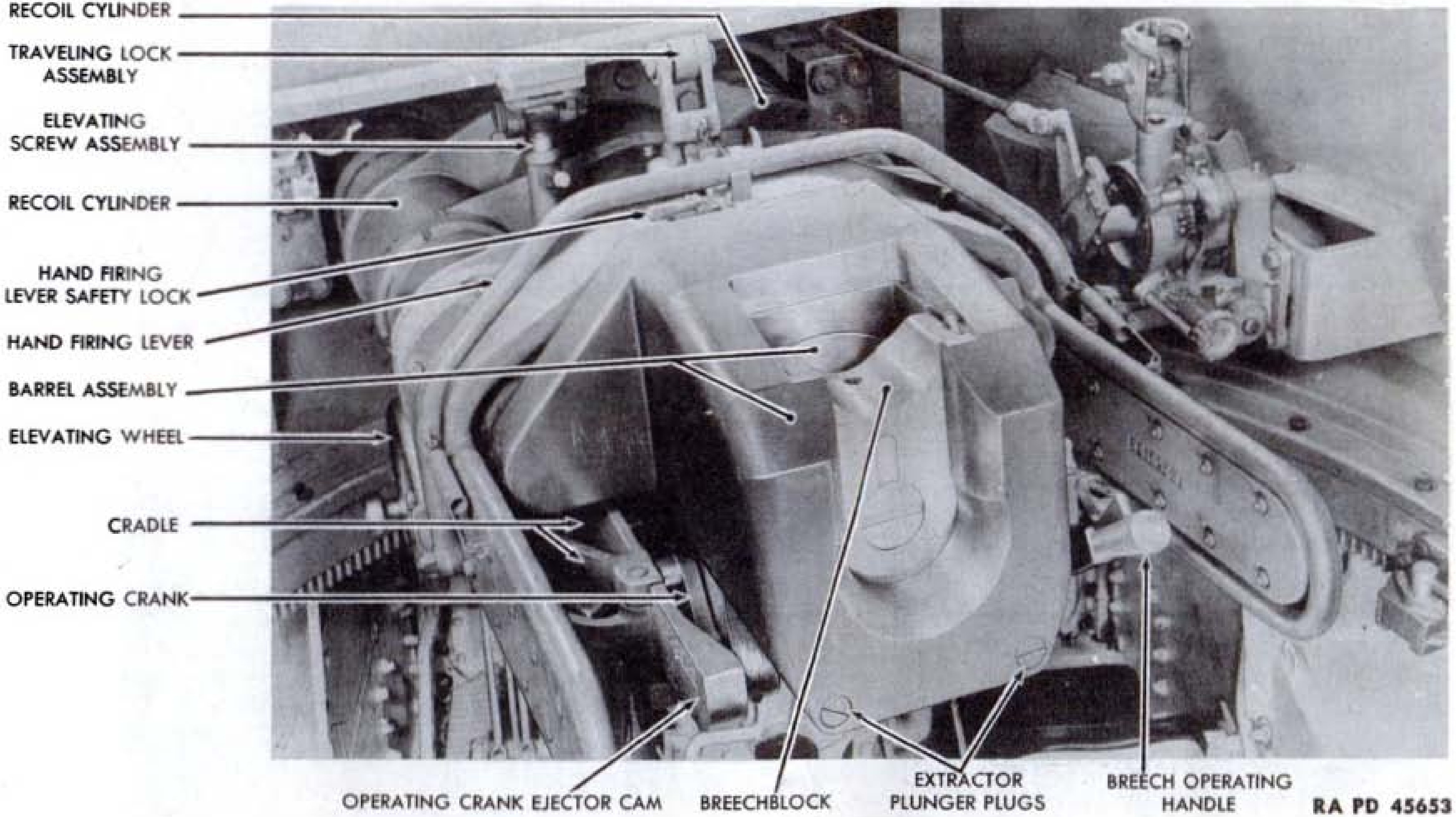

Figure 170—Left Quarter View of Breech End of Gun

cussion mechanism which allows the firing spring to force the firing pin guide forward until the stop comes in contact with the inner face of the breechblock bushing. The firing pin guide and firing pin are carried forward by inertia until the firing pin strikes the cartridge primer. The firing pin retracting spring then returns the firing pin guide to position within the breechblock.

237. FUNCTION AND OPERATION OF BREECH MECHANISM.

a. General (figs. 169 and 170).

(1) The breechblock mechanism slides up and down in its recess in the breech ring, thereby either opening the firing chamber for loading or closing the firing chamber for firing of the round (figs. 169 and 170).

(2) The breech is usually automatically opened by the action of the operating crank ejector cam (fig. 170) during counterrecoil. However, the breech may be opened or closed manually by using the breech operating handle.

b. Automatic Opening of Breech.

(1) After a round has been fired, the gun recoils in the cradle. The counterrecoil springs return the gun to battery position.

(2) As the gun (fig. 170) slides forward, a projecting lug on the operating crank contacts an operating crank ejector cam on the cradle, and the operating crank is rotated rearward. The operating crank transmits the rearward motion through the breech operating shaft to the breechblock operating crank, whose arm swings rearward and downward, thereby causing the cross heads (on breechblock operating crank) to slide in the T-slot of the breechblock and to lower the breechblock.

(3) The rotation of the breech operating shaft also rotates the chain terminal crank rearward, thereby drawing the closing spring piston rearward and compressing the closing spring.

(4) As the breechblock moves downward the inner trunnions on the two extractors slide in grooves cut in the sides of the breechblock (figs. 161 and 162). As the cartridge case is uncovered, the forward curve of the grooves cut in the breechblock forces the inner trunnions on the extractors forward. The extractors roll on the front face of the breech recess, and the lips of the extractors (on upper inner edge) first engage the rim of the cartridge case and then are forced rearward to draw the cartridge case out of the firing chamber, and eject it from the breech.

(5) As soon as the breechblock reaches its full open position, the breechblock is stopped by the contact of the breechblock operating crank with a stop surface on the bottom of the breech ring. The extractor plungers now force the outer trunnions of the two extractors

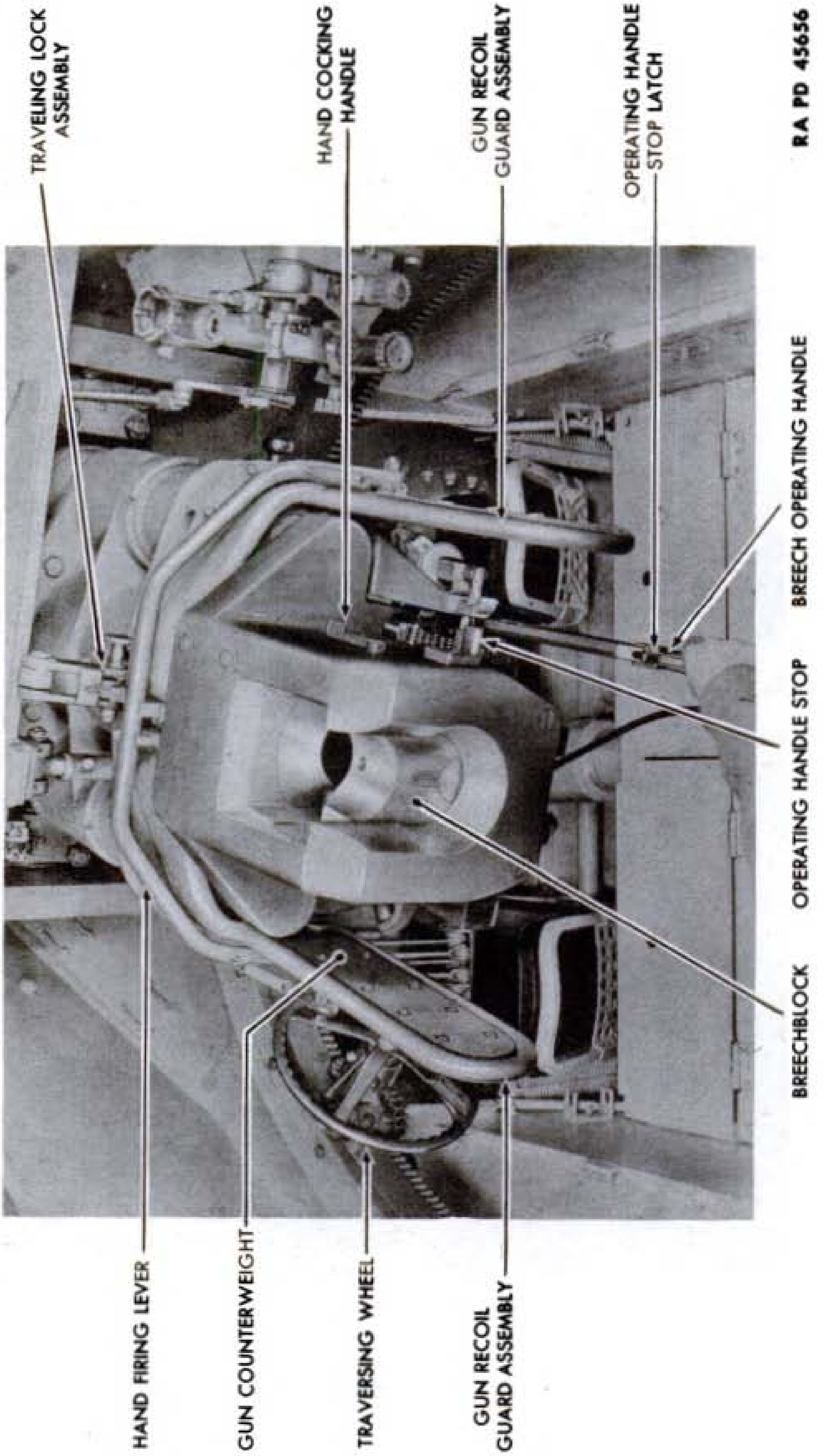

Figure 171—Manually Opening the Breech

forward, forcing the inner trunnion of the extractors to follow the cam grooves cut in the sides of the breechblock until the flat surfaces of the inner trunnions are seated on the flat surfaces at the top of the extractor cam grooves in the breechblock. The breechblock is now locked in an open position.

c. **Manual Opening of Breech** (fig. 171).

(1) Unlatch breech operating handle from operating handle stop by grasping lever so that operating handle stop latch is lifted clear of the stop.

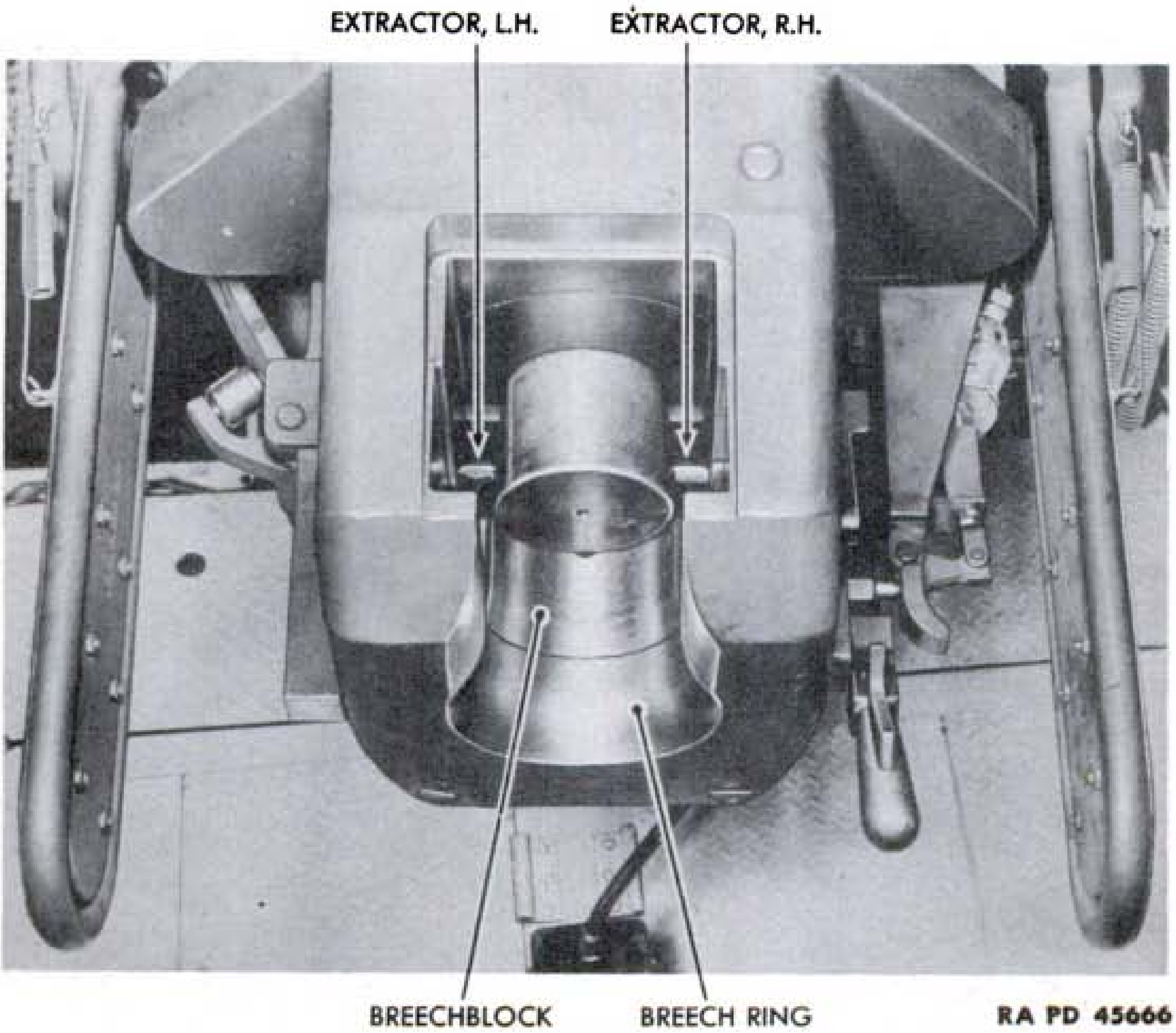

RA PD 45666

Figure 172—Closing the Breech by Loading a Round

(2) Push breech operating handle down until a distinct click can be heard and then lift breech operating handle up and latch it on the operating handle stop.

d. **Closing Breech by Loading** (fig. 172).

(1) Insertion of a round into the firing chamber with sufficient force to push extractors forward unlocks the breechblock. NOTE: *Do not allow the fingers or hands to enter the breech recess. Failure to observe this may result in injury.* Round must be inserted with a forward and upward movement of the arm using the palm of the

hand on the base of the round in order to insure that arm is above and clear of the breech when the breech closes.

(2) As the round completes its entry into the firing chamber, the rim of the cartridge case strikes the lips of the extractors. The inner trunnions of the extractors are forced off the flats of the breechblock and into the grooves cut in the breechblock, thus releasing the breechblock from its locked position. The action of the compressed closing spring raises the breechblock to its closed or firing position.

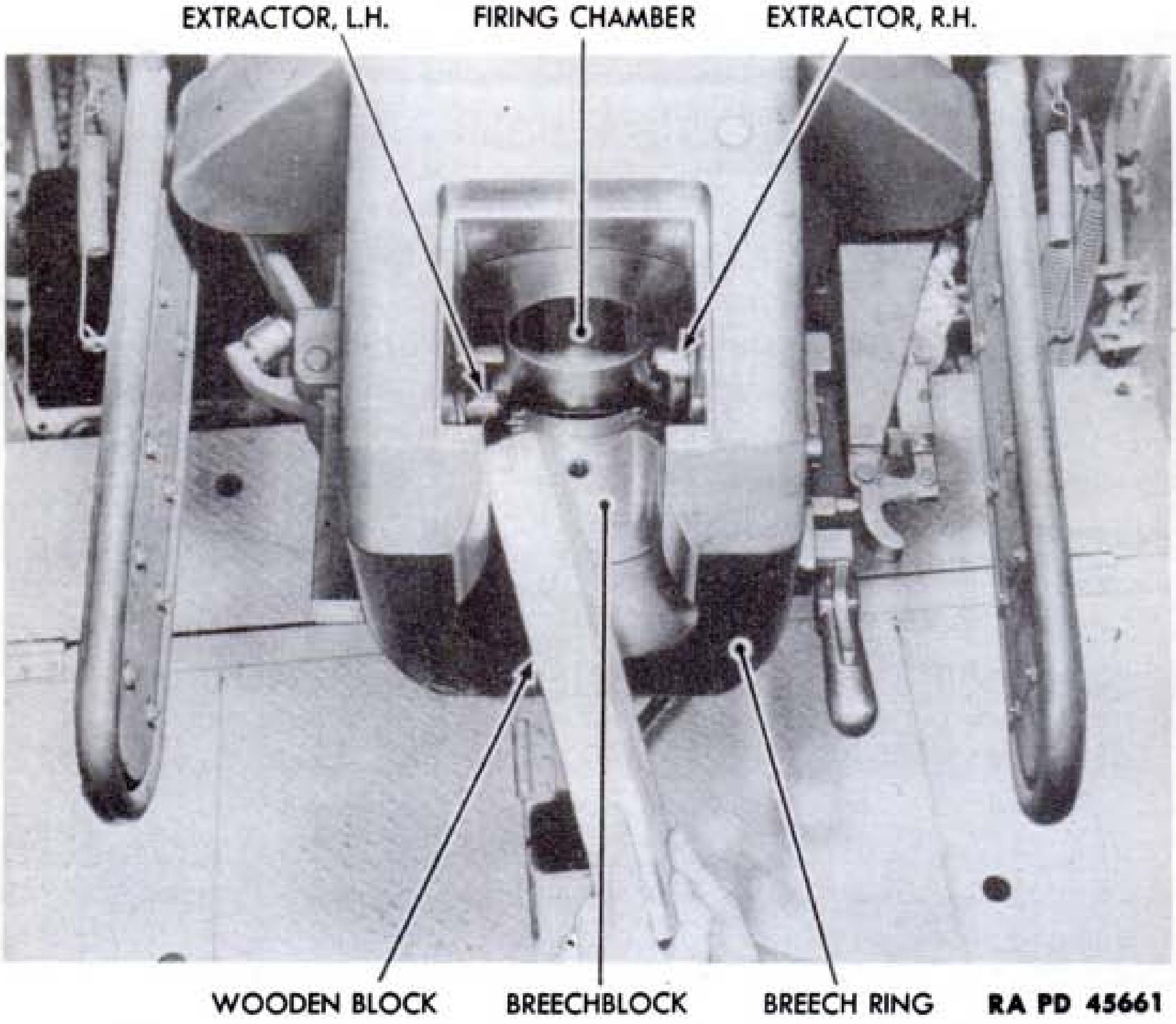

Figure 173—Manually Closing Breech—Wood Block

(3) The closing spring being fastened to the chain terminal crank causes the chain terminal crank to turn the breech operating shaft (crank being on the shaft). The breechblock operating crank also turns because it is also on the breech operating shaft. These moving parts come to rest when the breechblock cross heads on the breechblock operating crank contact the rear face of the tube.

(4) As the breechblock rises, a bevel on the upper front face of the breechblock drives the round into the firing chamber. A forward movement is also imparted to the round by slightly inclined guides in the breechblock, and this forward movement completes the seating of the round.

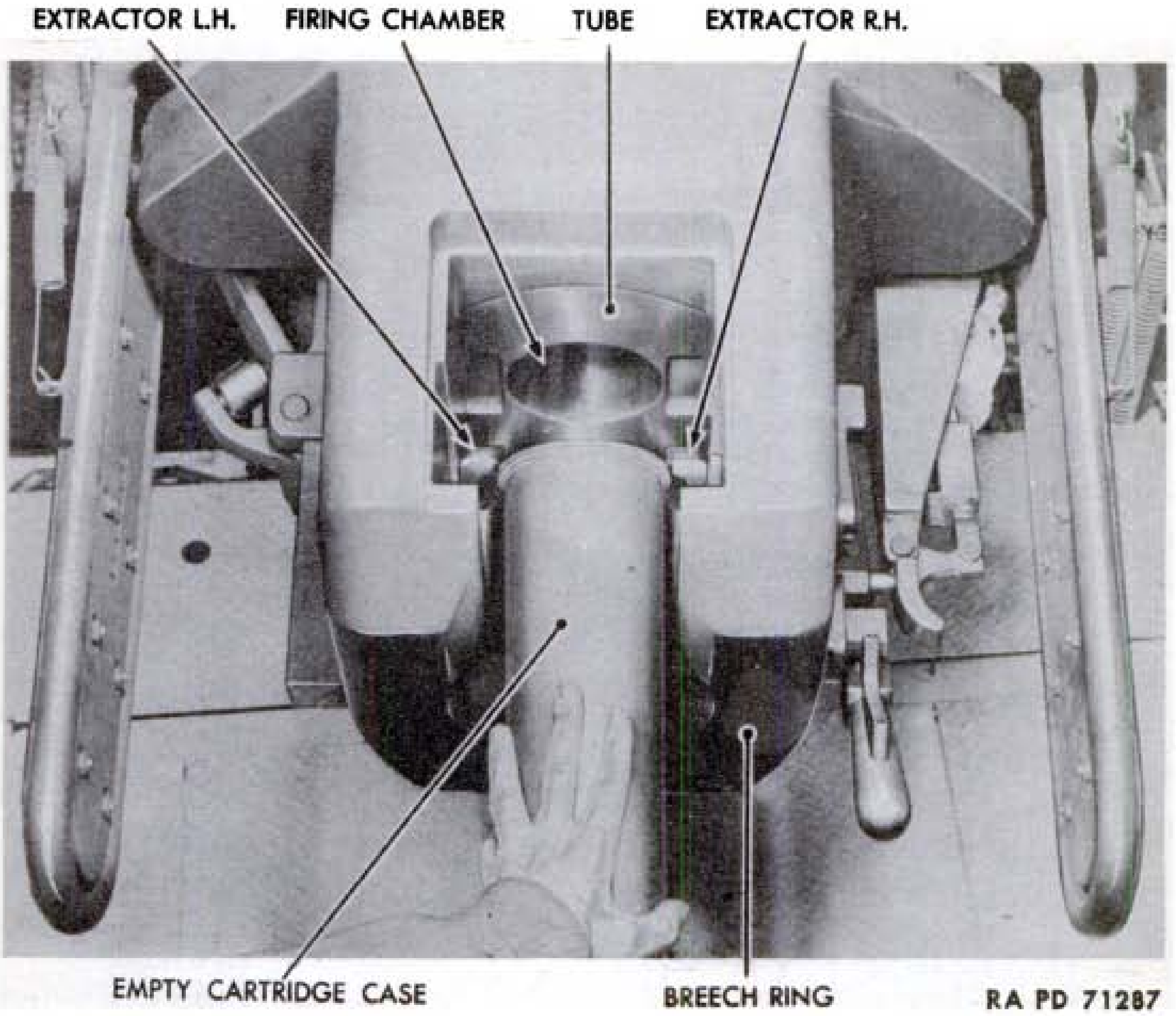

Figure 174—Manually Closing Breech—Cartridge Case

e. Closing Breech without Loading.

(1) When it is desired to close a breech without inserting a round in the firing chamber, it can be accomplished with either a block of wood (fig. 173) (about 2 x 4 x 12 in.) or with an empty cartridge case (fig. 174). NOTE: *Do not use the fingers to press on extractors, as possible injury may result.*

(2) Press on either one of the two extractors with a block of wood until the extractor is pushed forward into its unlocked position. Then press the opposite extractor forward until it is in its unlocked position and the breechblock will fly upward.

Section XXVII

DESCRIPTION AND FUNCTIONING OF MOUNT

238. GENERAL.

a. The mount assembly consists of a cradle with elevating mechanism and two recoil cylinders, mechanical firing mechanism, electrical firing circuit, and operating crank ejector mechanism.

b. The mount assembly rests on trunnions in the turret which is mounted on the gun motor carriage M10.

239. CRADLE (fig. 185).

a. The cradle has two bored sections for two recoil cylinders. On the front of these bored sections are two keys which are welded in place. These keys fit into keyways in the recoil cylinders in order to properly locate the recoil cylinders.

b. The gun shield forms the front of the turret. It has the telescope shutter on the outside with the telescope shutter handle on the inside, thus permitting the shutter to be operated from inside the turret. A cylindrical steel section ending in a machined flange is welded to the center of the inside of the gun shield and the tube passes through this cylindrical section. The machined flange is separated from the cradle by a spacer and the gun shield is then bolted through the spacer to the cradle. The gun shield has two arms which bolt to trunnions located inside the forward end of the turret (fig. 175).

c. The function of the mount is to provide stability and alinement for the gun during recoil and counterrecoil after firing and also to provide readily accessible means for elevating the gun during firing.

d. A large centrally bored section in the cradle contains bronze liners and is the barrel support. The finished and ground section of the barrel slides in the bronze liners during recoil and counterrecoil. Lubrication fittings on the cradle assure lubrication of the ground

DESCRIPTION AND FUNCTIONING OF MOUNT

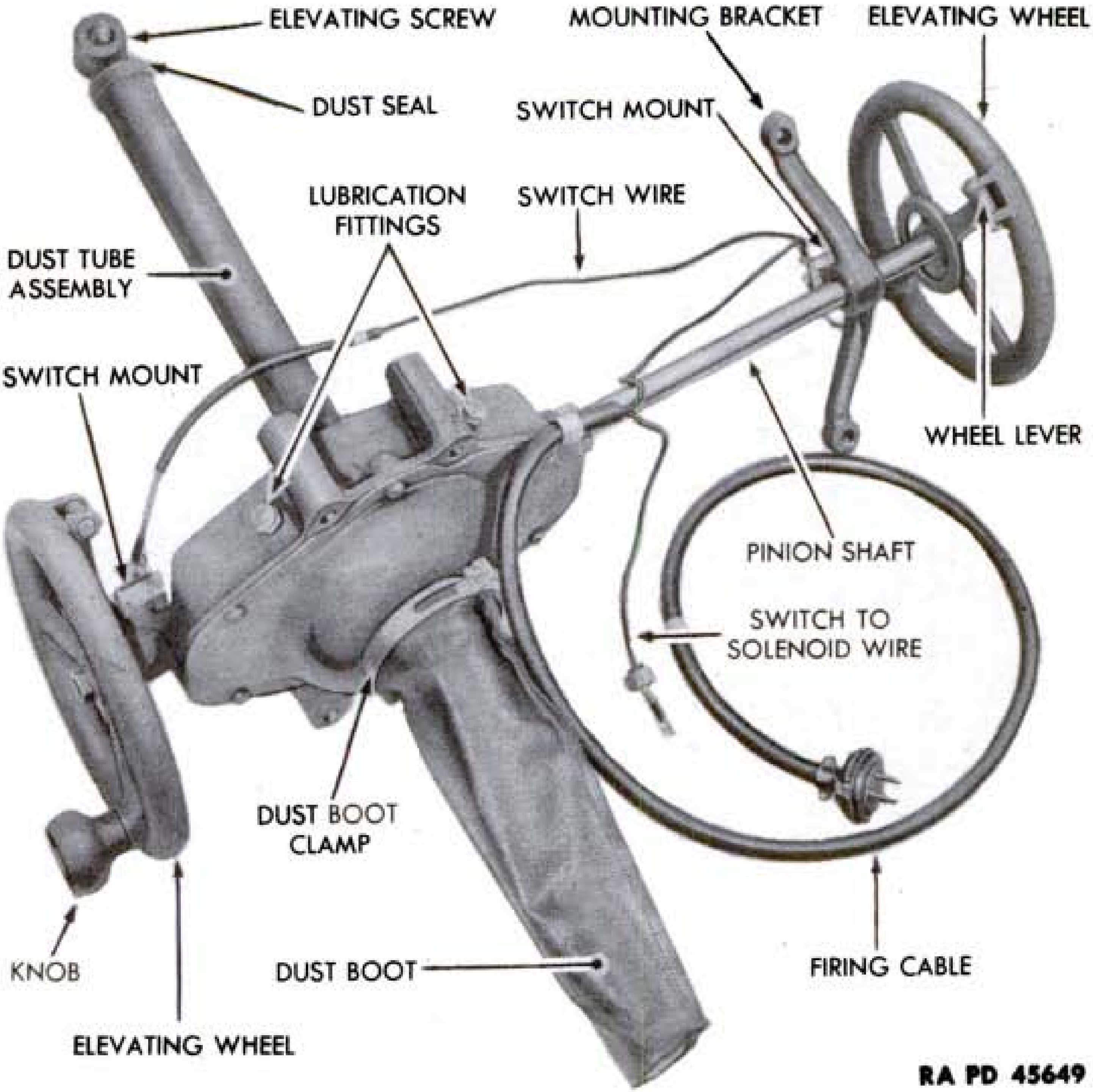

Figure 175—Elevating Mechanism

section of the barrel; and a wiper with retainer keeps excess lubricant and foreign matter out of the bronze liners and off the ground section of the barrel.

e. A lug at the top and rear of the cradle is bored to provide a means of locking the gun in its traveling position. The barrel is toward the rear, resting in its support, when traveling (fig. 160).

f. The recoil guard assembly is bolted to the rear of the cradle, and consists of a recoil guard assembly and a hand firing bar assembly. The recoil guard assembly is composed of a right and left recoil guard welded together. To these recoil guards is fastened the balancing weights and one end of the two coil springs used to hold the hand firing lever forward (in neutral position). A swivel type lock for the hand firing lever is mounted on top of the recoil guard assembly to lock the lever in its neutral position. An adjusting screw with stop is bolted to the top of the recoil guard assembly for the hand firing lever. The hand firing lever is bolted to the right and left recoil guards and swivels in brackets bolted to the guards. The function of the recoil guards is to provide protection for the gun crew during recoil.

g. The elevating mechanism is bolted to the under side of the cradle. The mechanical firing mechanism, together with the electrical firing mechanism, is assembled on the right side of cradle. The operating crank ejector mechanism is mounted on the left side of the cradle.

h. The telescope is mounted on the cradle at the left side of the gun and just to the rear of the gun shield. The opening through the gun shield for the telescope has a heavy protective shutter which is operated by a handle from inside the turret.

240. ELEVATING MECHANISM.

a. General (fig. 175).

(1) The elevating mechanism consists of a centrally located elevating bevel gear to which is keyed an internally threaded elevating nut that moves up and down on an externally threaded elevating screw, thereby elevating or depressing the gun. Turning either the right or left elevating handwheel revolves pinions that mesh with the elevating gear.

(2) The elevating mechanism has the electrical firing wires and switches attached to it.

241. RECOIL MECHANISM.

a. General.

(1) The functions of the recoil mechanisms are to control and limit the recoil of the gun caused by firing; to return the gun to battery (counterrecoil); and to gradually reduce the shock of the gun as it returns finally into battery.

(2) There are two recoil cylinders, one on each side of the gun. These two recoil cylinders are held and located in the cradle by two keys that are welded on the cradle. Two recoil piston rods are held in the breech ring by externally threaded nuts on the ends of the piston rods. These nuts are locked to the breech ring by socket head set screws that push copper plugs into their threads. Both recoil cylinders contain helical springs which return the gun to battery position. The cylinders are kept filled with proper amount of heavy grade recoil oil.

b. Recoil Cylinders.

(1) The front end of each recoil cylinder has a recoil cylinder purging plug which both retains and locates the recoil cylinder sleeve. The counterrecoil buffer is located at this end of the sleeve.

(2) The rear end of both recoil cylinders has a nut for holding the recoil cylinders to the breech ring. The plug for filling the recoil mechanism with recoil oil is at this end (fig. 177).

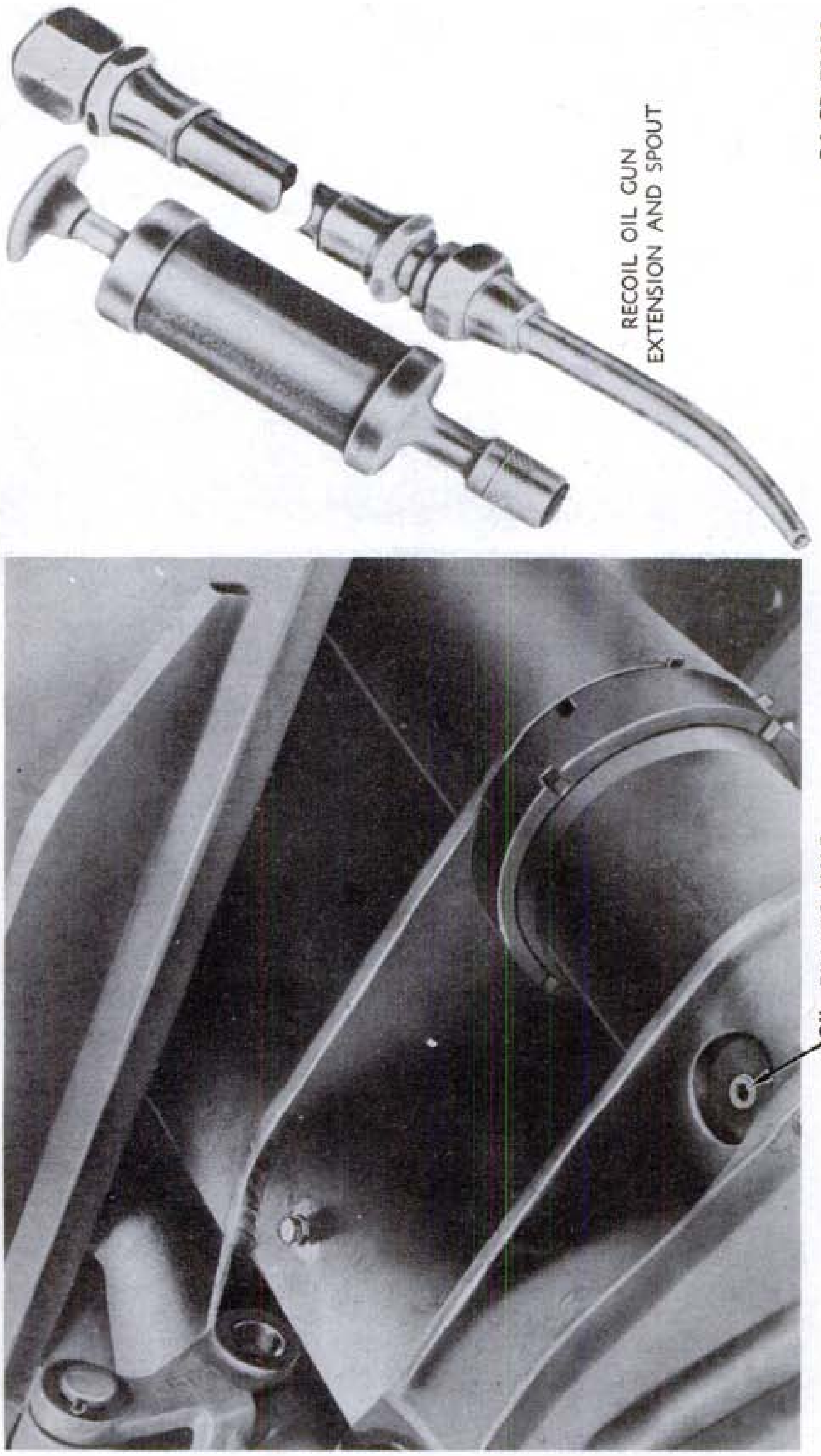

RA PD 71288

Figure 176—Filling Recoil Mechanism

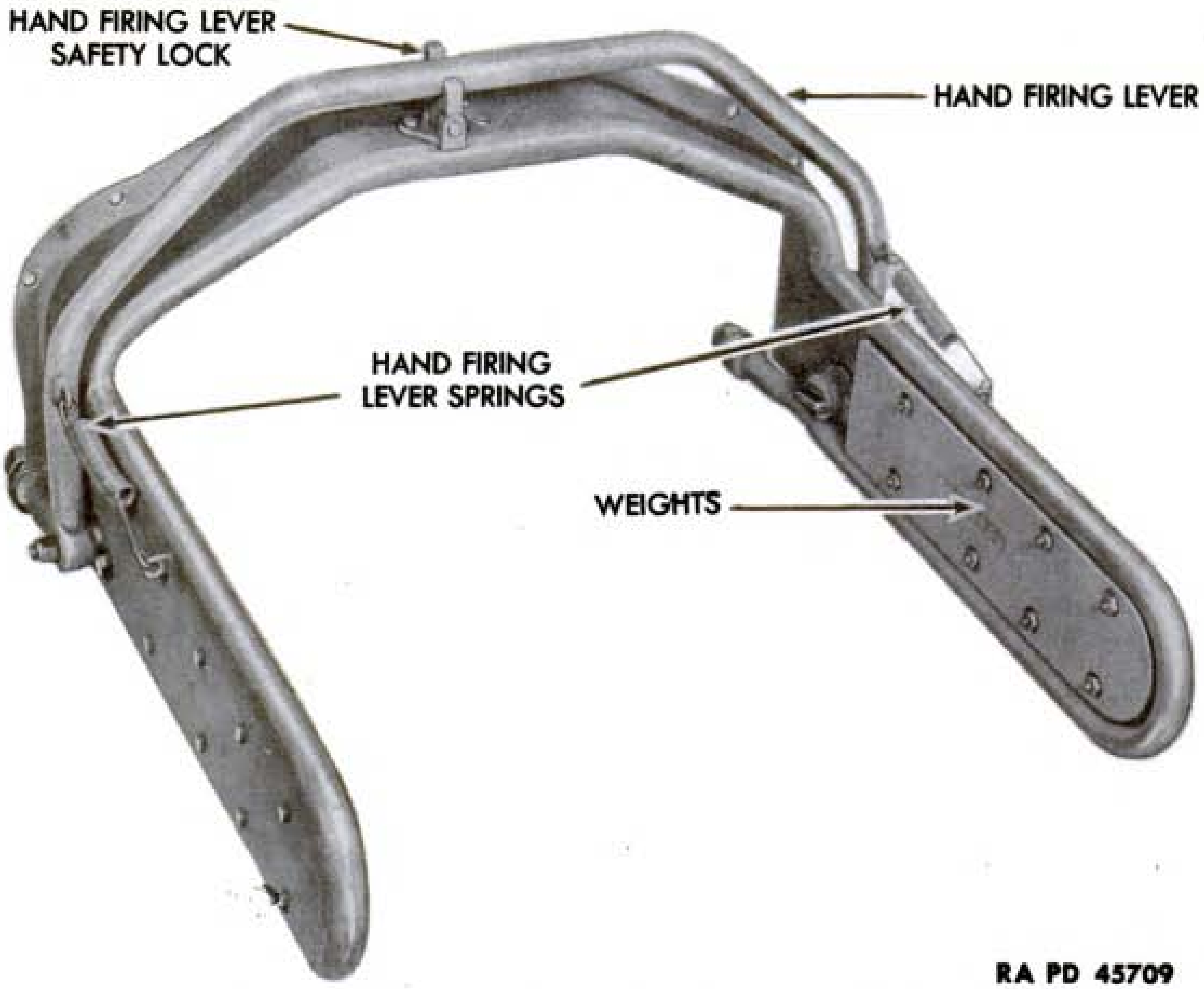

Figure 177—Gun Recoil Guard Assembly

c. Recoil Mechanism Action on Recoil.

(1) When in battery position, the recoil cylinder pistons are at the forward end of the recoil cylinder. Immediately upon firing, the recoil of the barrel begins and because the recoil cylinder pistons are fastened to the breech ring, they start backward along with the barrel.

(2) The recoil oil in the recoil cylinder is displaced through orifices, and the counterrecoil inner and outer springs are compressed. The recoil cylinder piston ceases its travel on recoil and the compressed counterrecoil inner and outer springs exert their pressure on the piston, thereby starting the piston forward on counterrecoil (toward battery position).

d. Recoil Mechanism Action on Counterrecoil.

(1) Counterrecoil buffer mechanism is fastened to the front end of the recoil cylinder and is the means of cushioning the last few inches of counterrecoil just before the barrel reaches battery position.

(2) The counterrecoil buffer fits inside the piston rod, and by displacing the recoil oil inside the piston rod allows the gun to return to battery without shock.

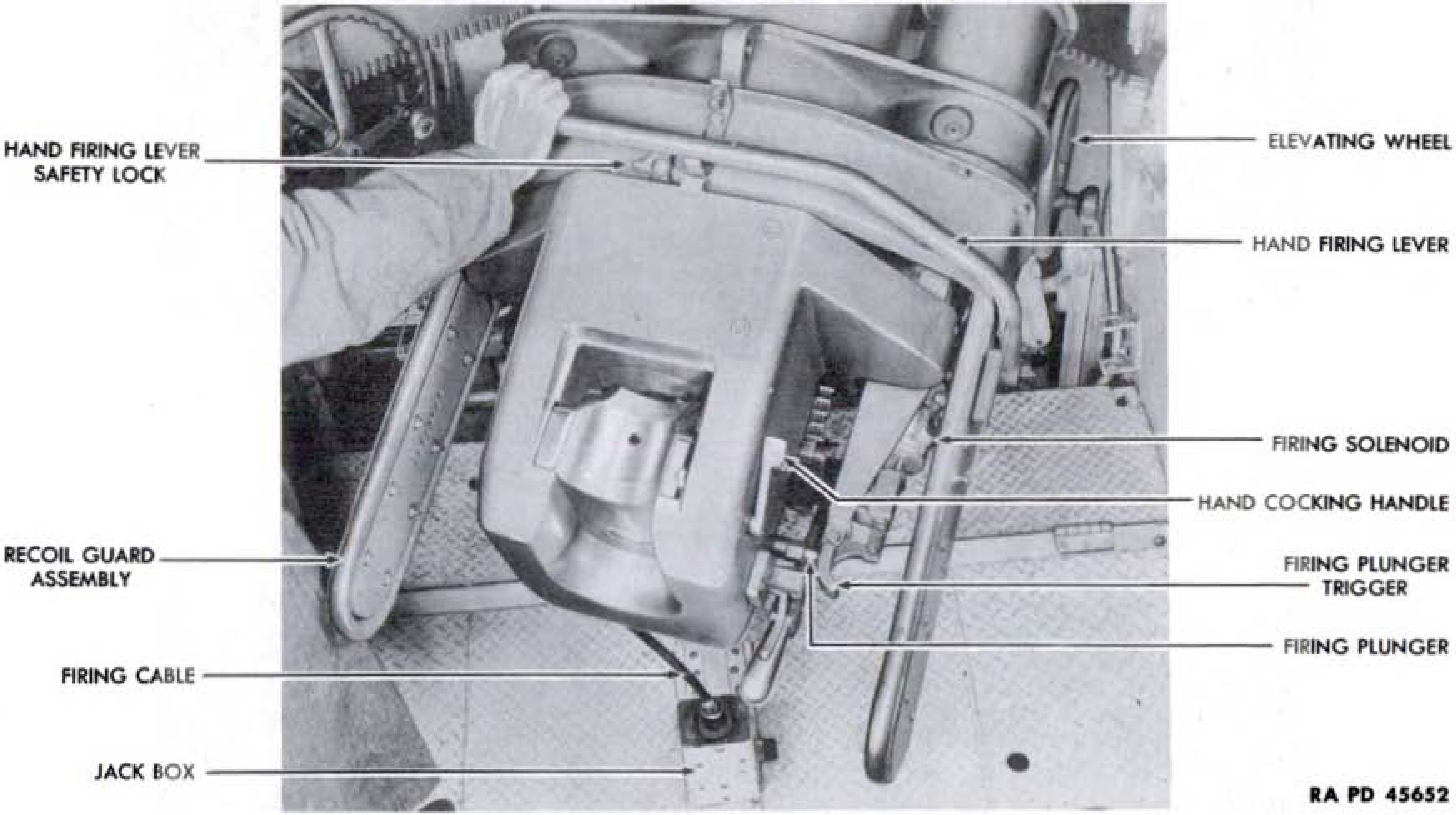

Figure 178—Hand Firing the Gun

242. GUN RECOIL GUARD ASSEMBLY.

a. General (fig. 177).

(1) The gun recoil guard assembly consists of an arm on each side of the breech which extends back from the cradle to beyond the end of the breech ring (fig. 169). The hand firing lever extends from one side of the breech to the other and is bolted to the gun recoil guard assembly. The hand firing safety lock is bolted to the top of the gun recoil guard assembly. Weights to balance the gun are bolted to the gun recoil guards.

(2) The function of the gun recoil guards is to prevent injury to the gun crew during recoil and counterrecoil. The hand firing lever permits the round to be fired by hand. The hand firing safety lock secures the hand firing lever in locked position. The weights to the gun recoil guards balance the gun assembly to permit easy elevation and depression.

243. MECHANICAL FIRING MECHANISM.

a. General.

(1) The firing mechanism consists of a mechanical firing mechanism that is operated either by the electrical firing circuit or by the hand firing lever. The function of the mechanical firing mechanism is to provide a means for moving the sear transversely, in order to disengage the sear from the firing pin guide, thereby permitting the firing pin to strike the cartridge primer.

(2) The mechanical firing mechanism consists of a trigger connected to a firing rod and a hand firing lever that is connected to the solenoid plunger.

b. Action of Mechanical Firing Mechanism (fig. 179).

(1) A firing solenoid, mounted on the right side of the cradle, has a spring operated plunger extending through the solenoid. The solenoid plunger can be operated electrically or manually by the hand firing lever, the action in either case being to move the solenoid plunger to the rear. The firing plunger trigger is rotated by the solenoid plunger and pushes the firing plunger inward to move the sear away from the percussion mechanism, thereby releasing the firing pin to fire the round.

c. Manual Firing (fig. 178).

(1) The hand firing lever has a solenoid lever, attached to its right end, which contacts the solenoid plunger. When the hand firing lever is pushed forward, the solenoid lever pushes the solenoid plunger forward, causing the firing plunger trigger to push the firing plunger inward into the breech ring. The lug on the sear (which has been holding the percussion mechanism in a cocked position) is moved away from the percussion mechanism and the firing pin is released to fire the round.

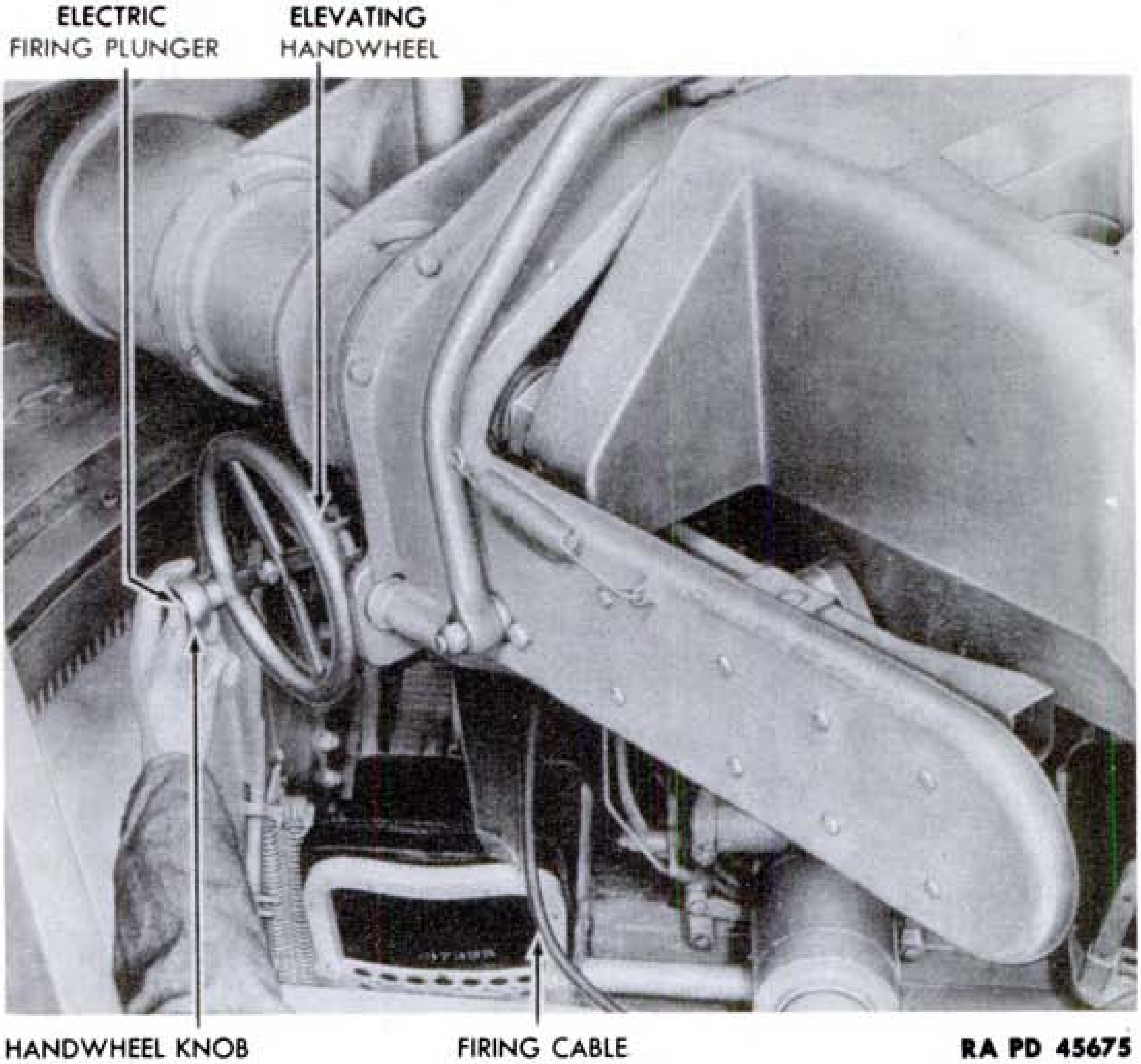

Figure 179—Electrically Firing the Gun

(2) The hand firing lever can be locked in a neutral position by means of the hand firing lever safety lock. The forward movement of the hand firing lever, in order to fully release the percussion mechanism, can be adjusted by means of the hand firing lever adjusting screw.

244. ELECTRICAL FIRING CIRCUIT (fig. 179).

a. Current for electrically firing the gun is obtained by inserting firing cable into jack box (fig. 178), and actual firing of the round is accomplished by pressing the firing plunger which is in the knob of both elevating wheels. The pressing of the firing plunger energizes the firing solenoid, causing the same mechanical action as described for manual firing.

b. The necessary electric wiring is firing cable, switch wire, and switch to solenoid wire. All wiring is attached to the elevating mechanism (fig. 175).

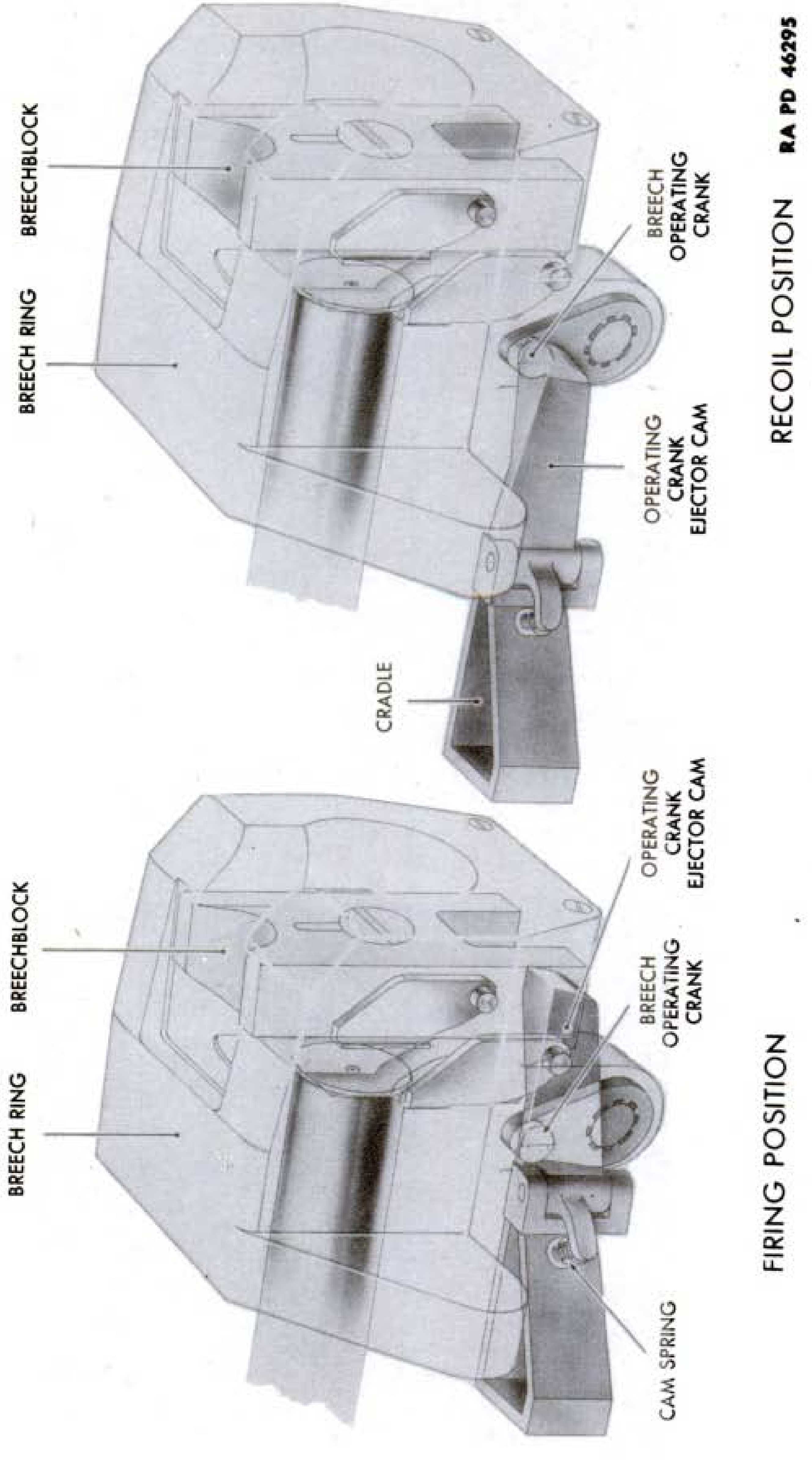

RECOIL POSITION

FIRING POSITION

RA PD 46295

Figure 180—Portion of Cartridge Case *Ejection Operation*

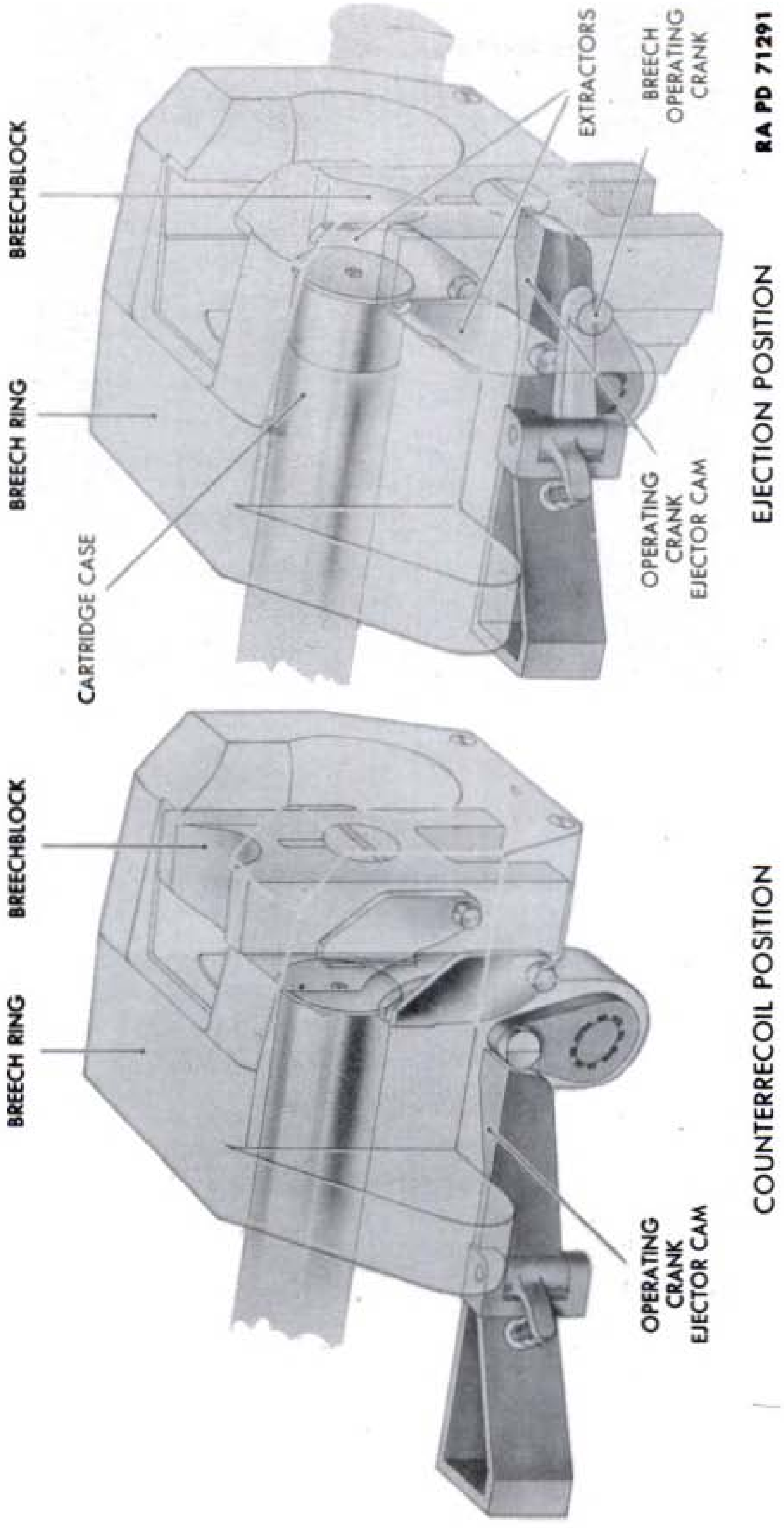

EJECTION POSITION

COUNTERRECOIL POSITION

Figure 181—Portion of Cartridge Case Ejection Operation

245. CAM EJECTOR MECHANISM.

a. General.

(1) The cam ejector mechanism consists of an ejector cam which is mounted on a bracket that extends out from left rear end of cradle. An ejector cam pin holds the cam to the cradle and two ejector cam screws secure the cam to the cam pin.

(2) The inside of the ejector cam has a sloped (cam) surface on which the breech operating crank operates. The front end of the ejector cam has an offset lug which contacts a spring operated retainer to hold the cam in contact with the breech operating crank.

b. Firing Position (fig. 180). The breech operating crank rests inside of ejector cam when the operating crank and ejector mechanism are in firing position. The ejector cam spring retainer is maintaining pressure on the ejector cam, keeping the cam in contact with the breech operating crank.

c. Recoil Position (fig. 180).

(1) The breech operating crank, being attached to the breech operating shaft, recoils and counterrecoils along with the tube and breech. The ejector cam, being attached to the cradle, remains stationary during recoil and counterrecoil.

(2) At the start of recoil the operating crank is forced against the ejector cam, causing it to pivot outward on the camp pin. When the crank clears the end of the ejector cam, the ejector spring pushes the cam back into its normal (straight) position.

d. Counterrecoil Position (fig. 181). Counterrecoil starts with the breech operating crank off and to the rear of the ejector cam. As the barrel and breech near the finish of their counterrecoil, the breech operating crank strikes the rear end of the ejector cam. This causes the breech operating crank to rotate. The splined breech operating crank, being on the splined breech operating shaft, rotates the shaft, opening the breech and compressing the breech closing spring.

e. Ejection Position (fig. 181).

(1) The opening of the breech automatically ejects the fired cartridge case.

(2) As the counterrecoil continues, the breech operating crank turns off the end of the ejector cam and onto the bottom of the cam, then forward on the bottom of the cam; and as soon as a round is inserted into the firing chamber the operating crank and ejector mechanism are again in firing position.

Section XXVIII

OPERATION OF GUN

246. PLACING GUN IN FIRING POSITION.

a. Remove breech cover, sight covers, and muzzle cover and stow them in the place assigned for them. Stow all equipment not needed for the operation of the gun.

b. Pull traveling lock pin from traveling lock and then swing lock up under turret and install traveling lock pin through lock and turret lock bracket (fig. 182).

c. There are two traversing locks, one on the left side to the rear of the traversing wheel (fig. 183) and the other on the right side to

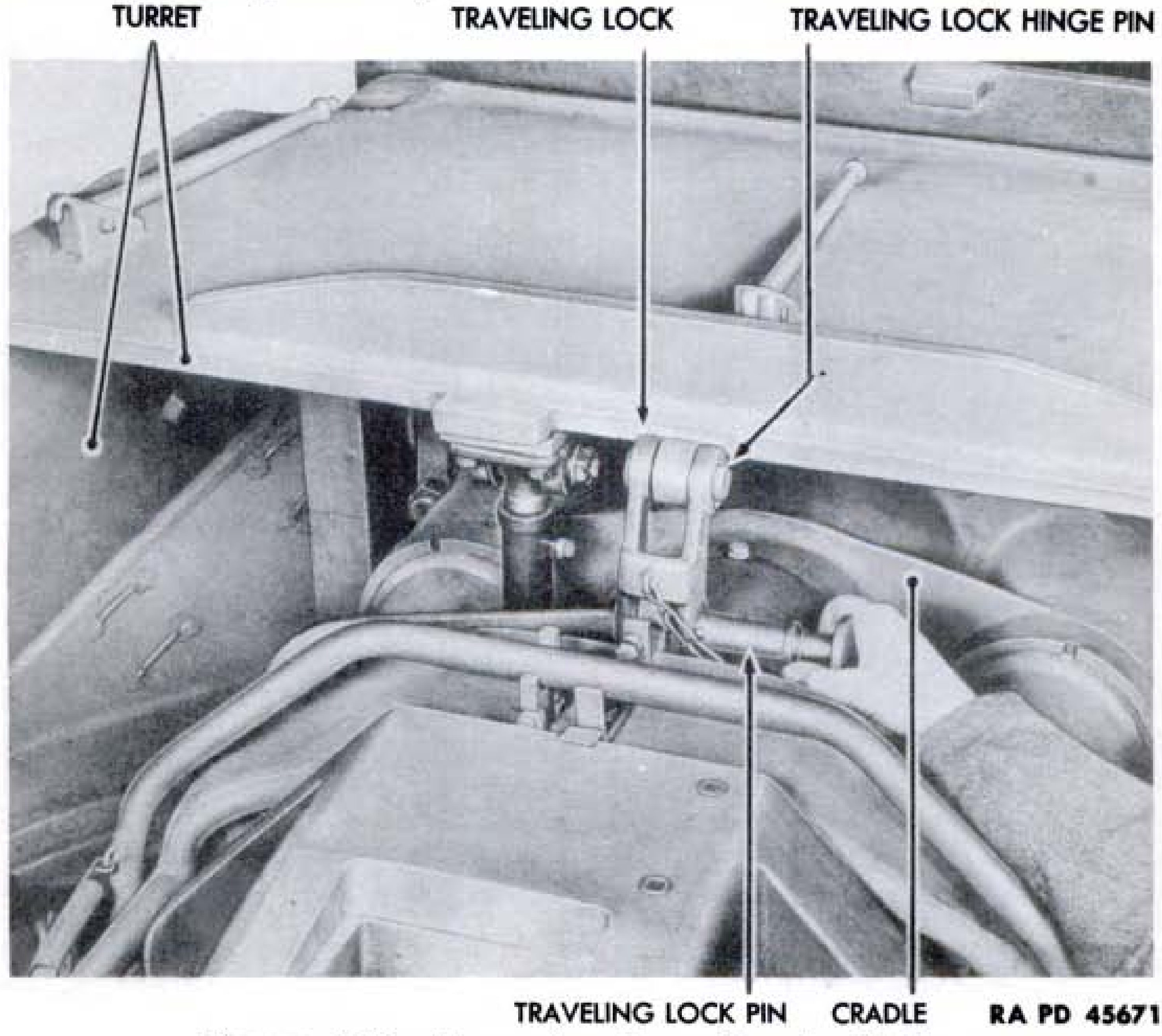

Figure 182—Removing Traveling Lock Pin

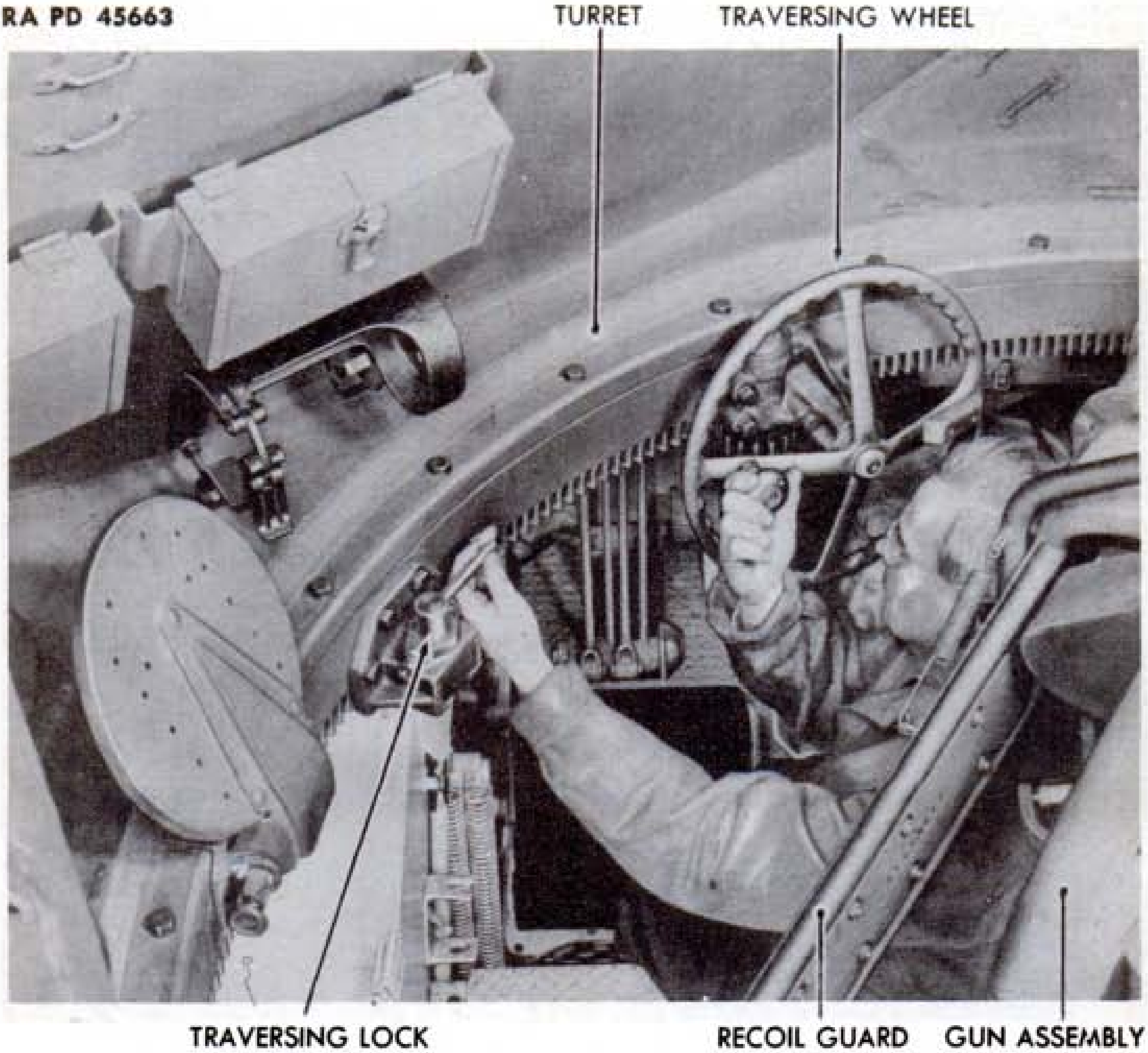

Figure 183—Traversing Wheel and Lock, Left Side

the rear of the panoramic sight (fig. 184). Disengage these traversing mechanism locks.

d. Install telescope M51 or M70G in mount on left side of gun at gun shield. Open telescope shutter by turning telescope shutter handle.

e. Elevate and traverse gun to make certain both mechanisms are working freely.

f. Manually open and inspect breech.

247. TRAVERSING MECHANISM.

a. The traversing wheel is located on the left side of the turret at the hull (fig. 183). Traversing is accomplished by turning the traversing wheel either to the right or to the left. Complete traverse of 360 degrees can be obtained.

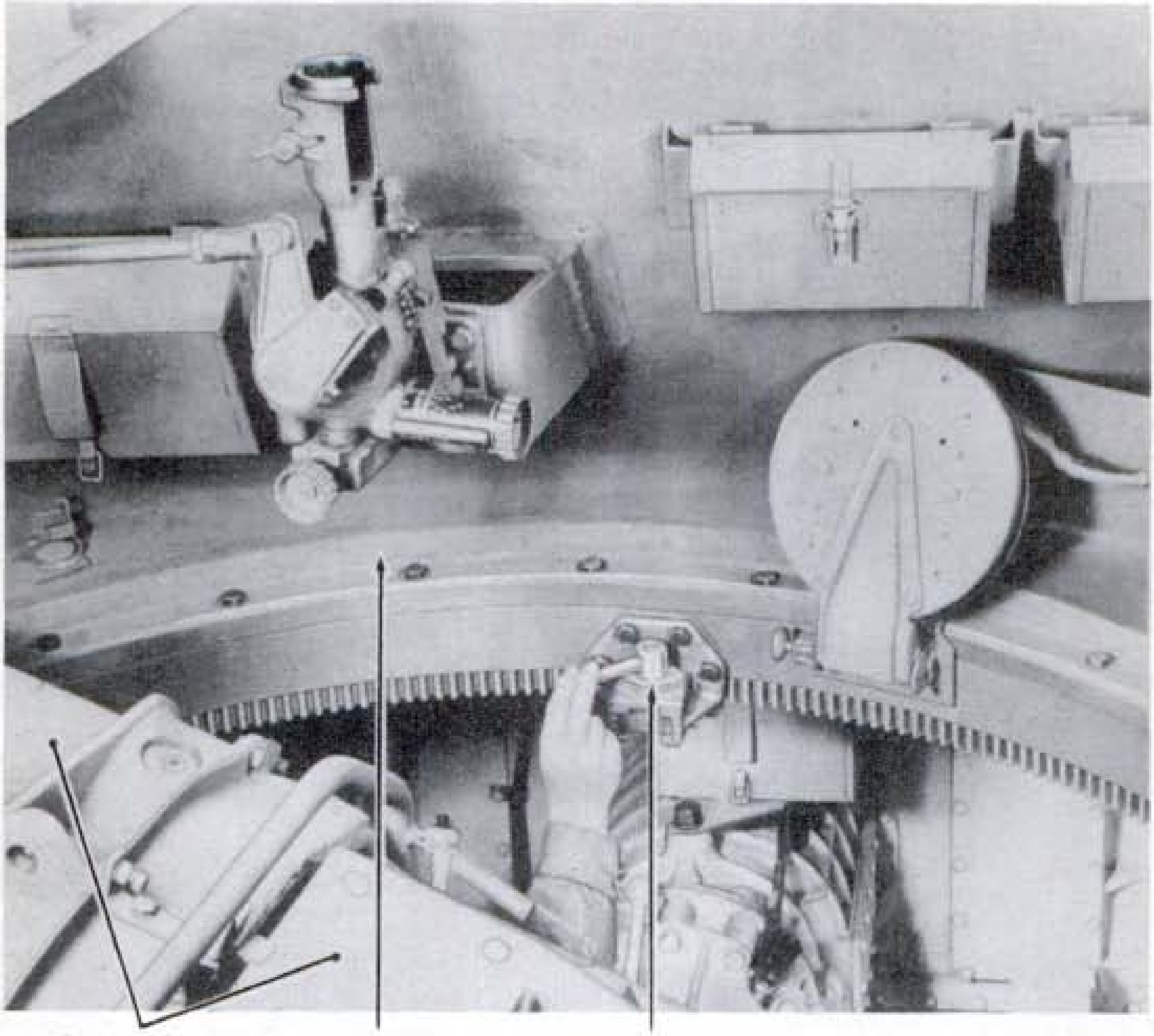

Figure 184—Traversing Lock, Locked Position, Right Side

248. ELEVATING MECHANISM.

a. The elevating mechanism is bolted to the cradle, and two wheels are provided for elevating the muzzle end of the gun. One wheel is on the right side of the gun and the other is on the left. Facing each wheel, elevation is accomplished by turning the wheel clockwise, and depression, by turning the wheel counterclockwise.

b. The electrical firing plunger is located in the center of the knob on both elevating wheels. The switch wire, switch to solenoid wire, and firing cable are located on the elevating mechanism underneath the cradle.

c. Hand-cock the percussion mechanism by pushing down (hard) on hand cocking handle (fig. 186) and then fire the gun by pressing on electrical firing plunger. If a distinct click is not heard (caused by the release of the firing pin) make certain wire connections are tight.

d. Turn hand-firing lever safety lock down (fig. 186) and repeat step c above, by using hand-firing lever. If hand-firing lever is not

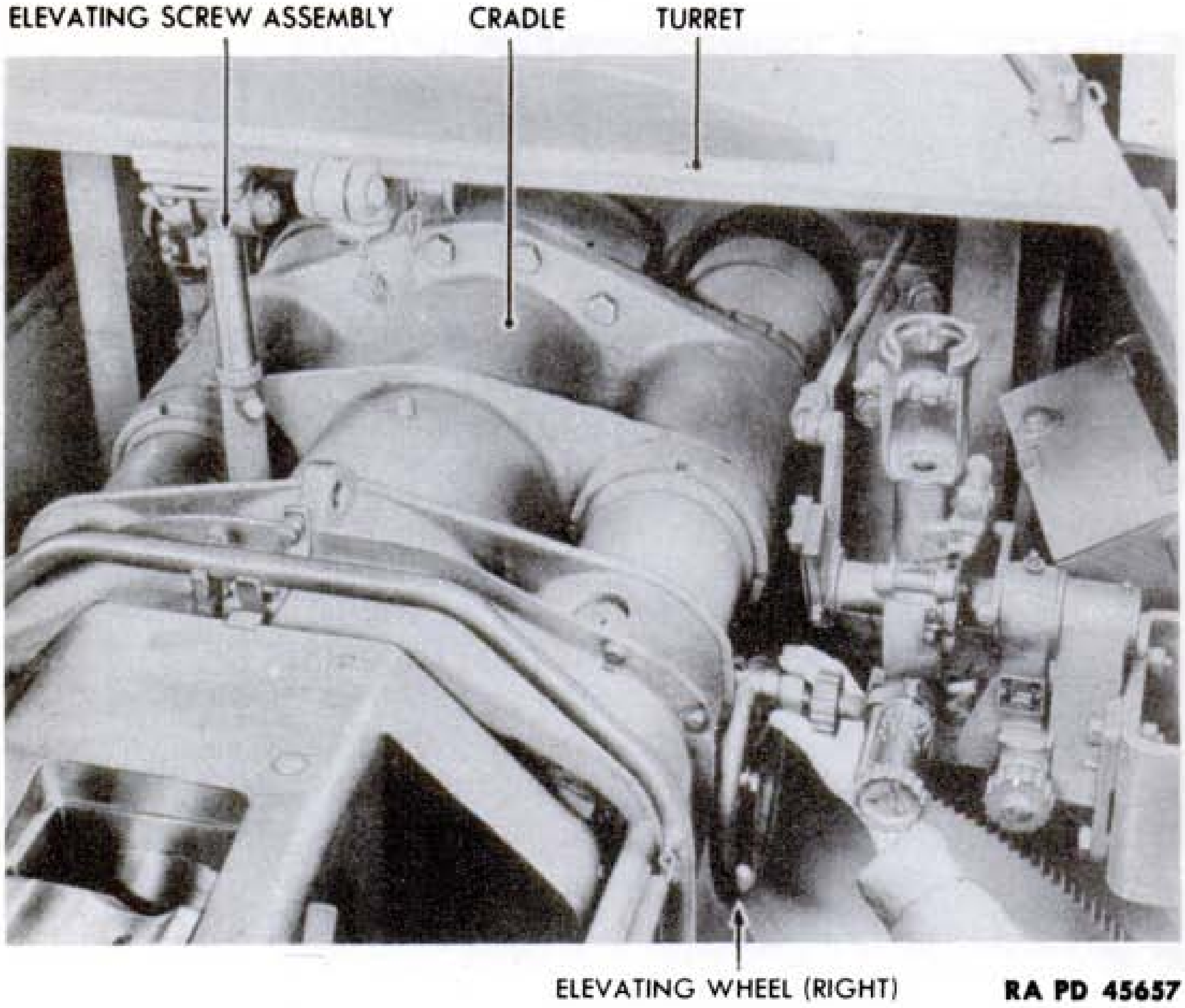

Figure 185—Elevating Wheel (Right)

to be used, turn hand-firing lever safety lock up again to avoid accidental firing.

249. LOADING.

a. Open Breech. Manually open the breech by unlatching breech operating handle from operating handle stop and pushing handle down until distinct click can be heard; then lift and latch the handle on handle stop.

b. To Load Gun. The round must be inserted into the firing chamber with sufficient force to operate the extractors and close the breech.

250. FIRING AND PRECAUTIONS DURING FIRING.

a. At the command "fire" the electrical firing plunger (fig. 180) on the right or the left elevating wheel can be pushed, or the hand firing lever pushed to fire the round (fig. 178).

b. The breech is opened and the fired cartridge case is ejected, automatically, by the action of recoil and counterrecoil. The fired cartridge case should be immediately removed from the vehicle.

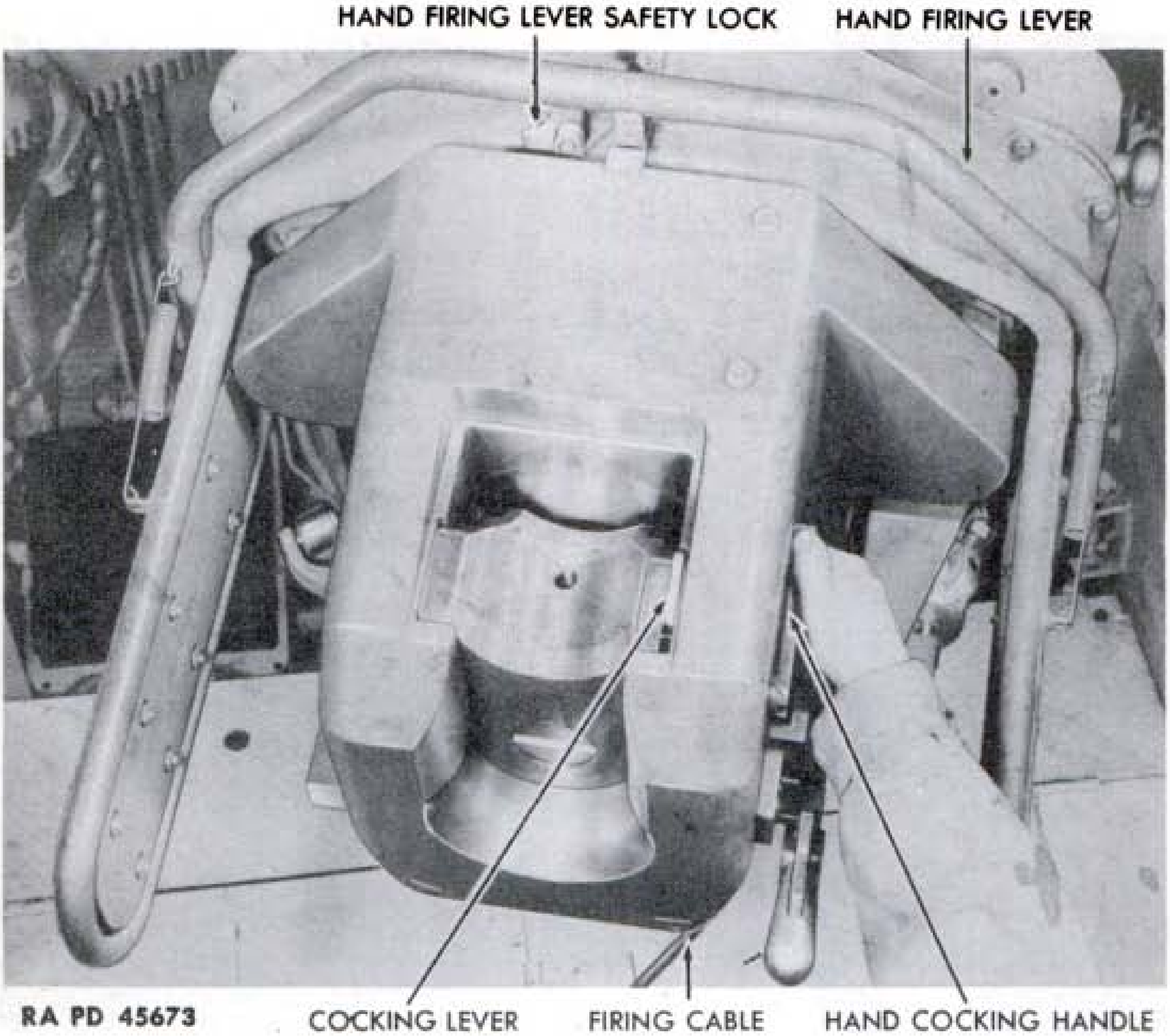

Figure 186—Cocking with Hand Cocking Handle

c. The two recoil cylinders should be kept filled with the proper amount of recoil oil. If the gun returns to battery with shock, it is an indication that the recoil mechanisms require recoil oil.

d. The lubrication fitting on the top of the cradle (fig. 175) is for lubricating the tube during its slide on recoil and counterrecoil. The tube should be lubricated occasionally during firing.

e. Whenever the rate of fire permits, the bore should be examined for fouling. If present, use bore brush to remove loose particles.

f. When using equipment, make certain that it is placed where it will not interfere with the action of gun or crew.

g. Do not stand or sit at the rear of gun during recoil and ejection.

h. If enemy shell bursts near weapon, make certain no damage has been done which might make continued firing dangerous.

251. UNLOADING.

a. There are times when it is necessary to unload the piece. Open the breech manually and catch the round as it is ejected. When a

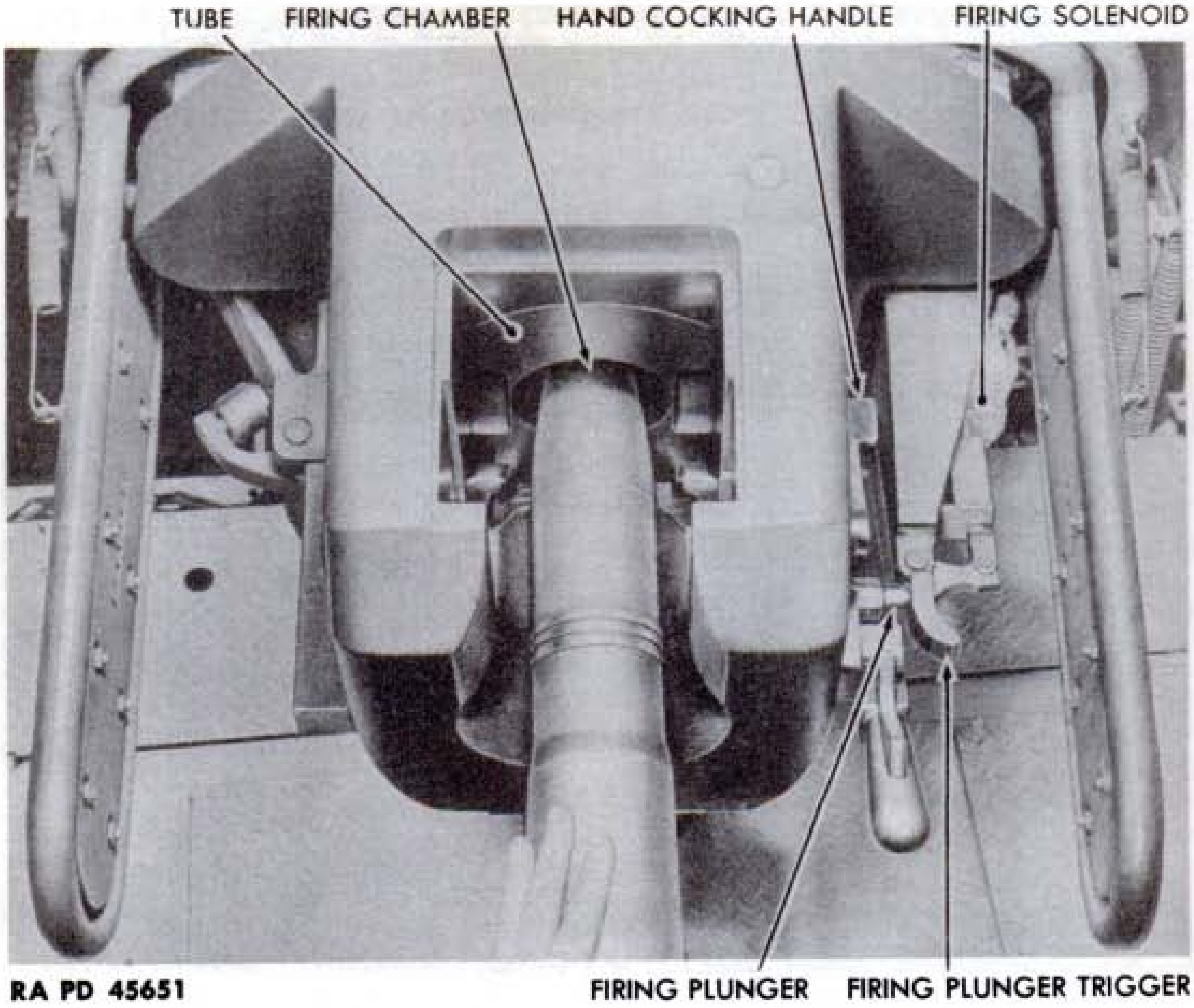

Figure 187—Loading the Gun

misfire occurs or an extractor breaks, it may be necessary to use the unloading rammer. NOTE: *The rammer will be used to unload a live shell only under the commander's supervision and with extreme caution.*

252. PLACING GUN IN TRAVELING POSITION.

a. Cover the telescope and remove it from its mount and place it in the stowage case.

b. Turn traversing lock handles to the rear (figs. 183 and 184), and then turn the traversing handwheel until the tube is over the gun rest (fig. 160). Turn elevating wheel counterclockwise (facing wheel) to depress tube and seat in gun rest. SAFETY CAUTION: *Before traveling, inspect and make certain that both of the primary turret traversing locks are securely fastened. Visual inspection should be made of carriages equipped with screw type locks in order to insure positive engagement of both locks. The position of the handle will indicate proper engagement on carriages equipped with eccentric type locks. The traversing mechanism itself acts as an auxiliary turret brake. It is not strong enough, however, to lock the turret securely,*

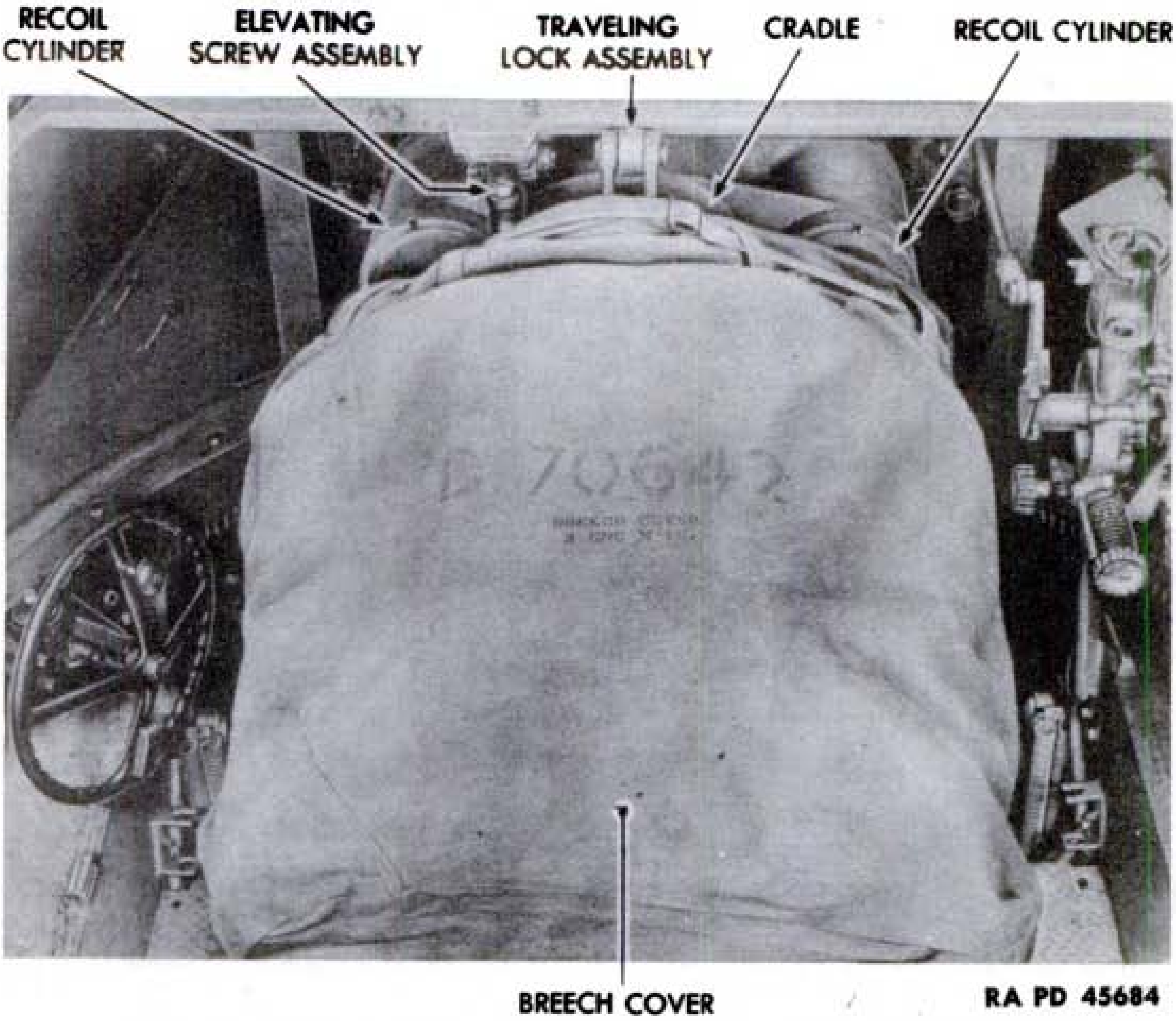

RA PD 45684

Figure 188—Breech Covering in Traveling Position

particularly when traveling over rough terrain. Therefore, if both of the primary turret traversing locks are not securely engaged when traveling, the traversing mechanism will break, allowing the gun tube to swing around and cause serious injury to the personnel or loss of life.

c. Remove traveling lock pin from turret bracket and turn traveling lock down. Turn elevating wheel to aline hole in traveling lock with hole in cradle bracket and insert traveling lock pin through traveling lock and cradle bracket (fig. 182).

d. Install breech and muzzle covers.

e. Remove machine gun lock pin from machine gun bracket. Turn machine gun lock handle up to its unlocked position. Cover caliber .50 machine gun, then remove gun and stow inside of turret.

f. Fill two recoil cylinders with the proper amount of recoil oil.

Section XXIX

SIGHTING EQUIPMENT

253. GENERAL.

a. The sighting equipment for the 3-inch gun motor carriage M10 consists of the telescope M51 or M70G, the periscope M6, and the gunner's quadrant M1. Arrangement of the equipment is shown in figure 189.

b. The information in this chapter is not as complete or as accurate as it will be in a future revision.

254. TELESCOPE M51.

a. The telescope M51 is used for direct laying of the gun against moving targets when firing the 3-inch armor-piercing shell M62. Observing through the telescope, bring the image of the target to

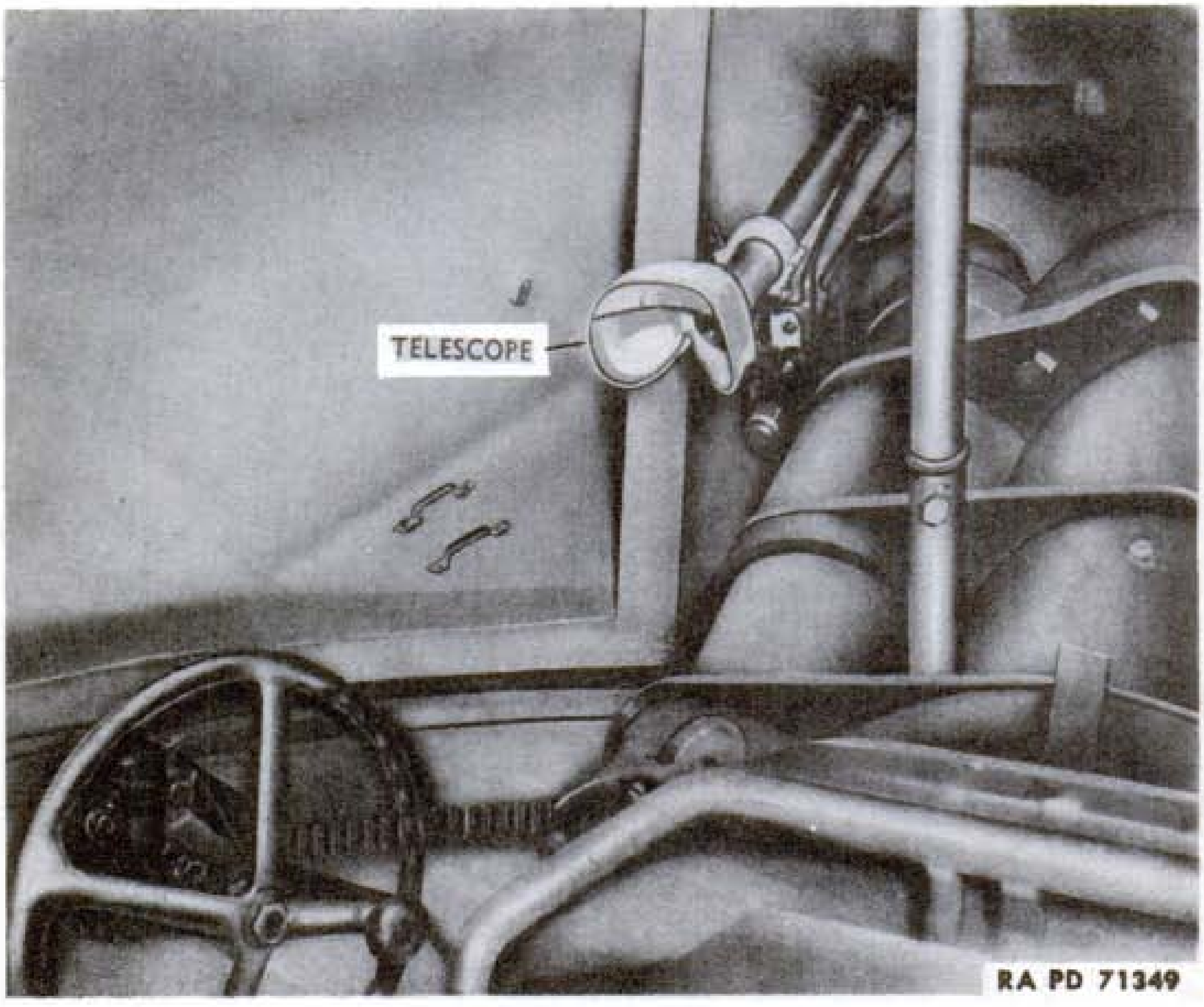

Figure 189—Arrangement of Telescope M51

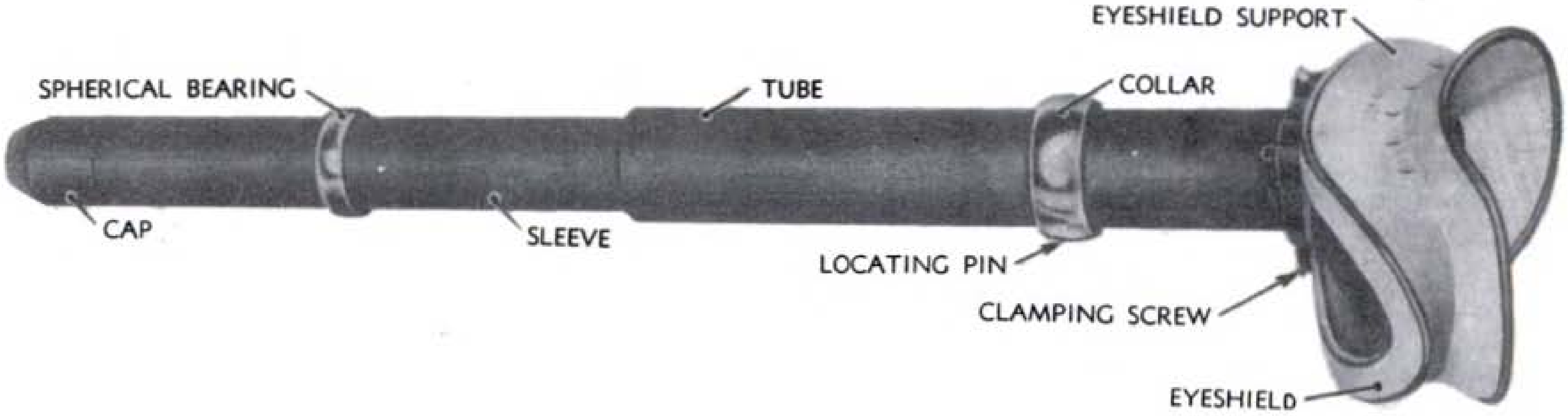

RA PD 71350

Figure 190—Telescope M51

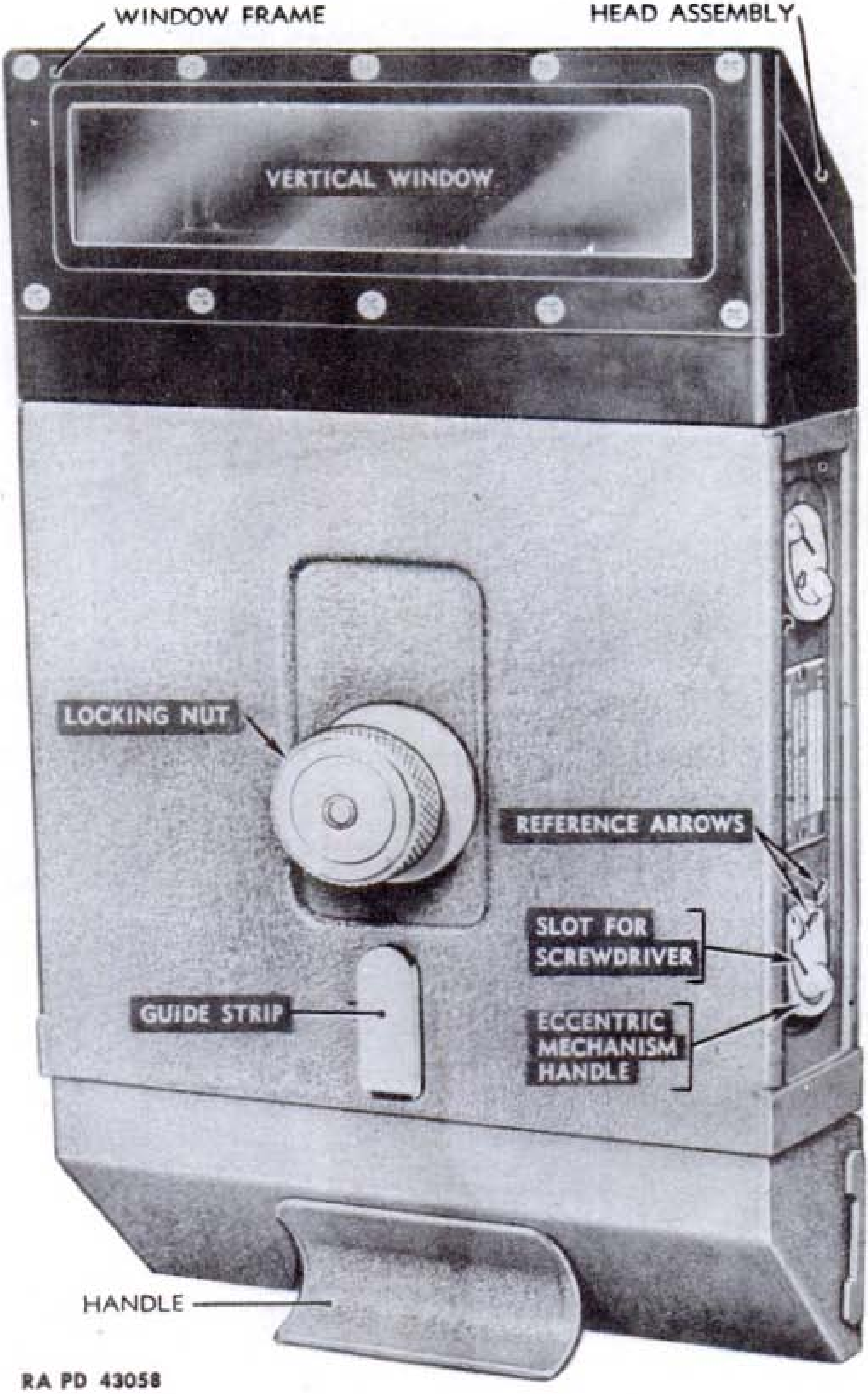

RA PD 43058

Figure 191—Periscope M6

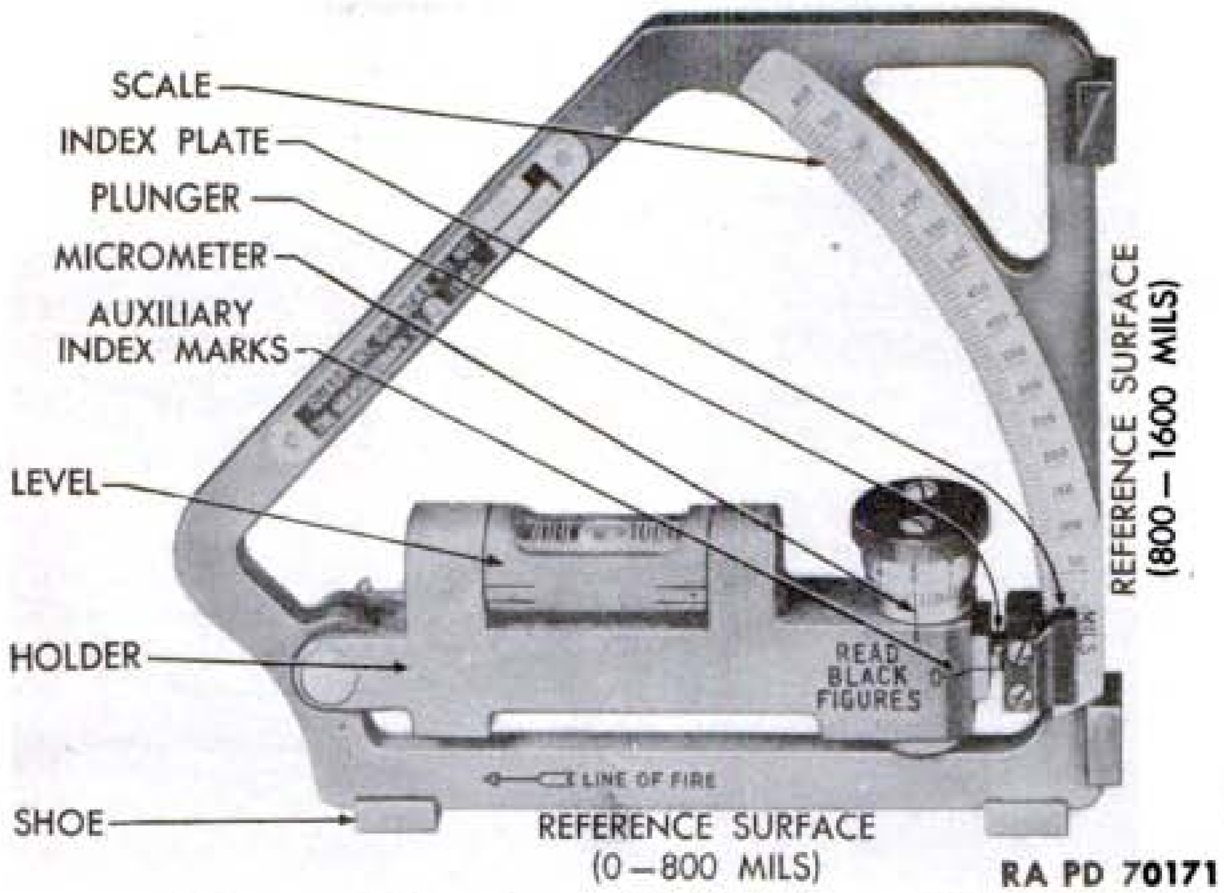

Figure 192—Gunner's Quadrant M1

the point on the reticle representing the required range and deflection by rotating the traversing and elevating handwheels of the gun carriage.

255. PERISCOPE M6.

a. The periscope M6 is used for observation and vision purposes only. The observer places his hands on the holder of the periscope to rotate and elevate or depress it until the desired panorama is brought into the field of view of the instrument.

256. GUNNER'S QUADRANT M1.

a. Elevation Angles.

(1) To measure elevation of the gun, place the proper reference surface (fig. 192) of the gunner's quadrant on the leveling pads of the gun, parallel to the bore, with the associated arrow pointing in the direction of fire. Set the 0 of the micrometer opposite its index with the auxiliary index marks matched.

(2) Disengage the plunger from the notches in the frame, lift the holder and lower it slowly until the bubble is seen to pass through its central position. Allow the plunger to engage the notches, and rotate the micrometer knob until the bubble is centered with respect to the graduations on the level vial. Face the side of the quadrant which bears the arrow in use, and read the elevation indicated on the elevation scale and micrometer; read red or black figures according to the instructions engraved below the micrometer. Remove the quadrant from the gun before firing.

b. Depression Angles. To measure depression angles, proceed as in a above, with the arrow pointed in the reverse direction.

Section XXX

AMMUNITION

257. GENERAL.

a. Ammunition for CARRIAGE, motor, 3-inch gun, M10, consists of:

(1) Rounds for GUN, 3-inch, M7.

(2) Cartridges for GUN, machine, cal. .50, Browning, M2, heavy barrel.

(3) Cartridges for GUN, submachine, cal. .45, Thompson, M1928A1.

(4) Cartridges for RIFLE, U.S., cal. .30, M1903 (w/ LAUNCHER, grenade, M1).

(5) Cartridges for CARBINE, cal. .30, M1.

(6) Grenades.

b. Ammunition for GUN, 3-inch, M7, is issued in the form of fuzed complete rounds of fixed ammunition. The term "fixed" signifies that the propelling charge is not adjustable and that the round is loaded into the cannon as a unit. The round consists of a primer and propelling charge of loose powder grains contained in a cartridge case which is crimped rigidly to the fuzed projectile. A complete round includes all the ammunition components required to fire the weapon once.

258. AUTHORIZED AMMUNITION.

a. The ammunition authorized for use with the weapons mounted or carried on this motor carriage, and other ammunition carried on the vehicle, are listed in Table I below. It will be noted that the nomenclature (standard nomenclature) completely identifies the ammunition as to type and model.

TABLE I—AUTHORIZED ROUNDS FOR GUN, 3-INCH, M7

Service Ammunition

PROJECTILE, fixed, A.P.C., M62, w/FUZE, B.D., M66A1, and TRACER, 3-inch guns, M1918 (all models), M1, M3, M5, M6, and M7.

PROJECTILE, fixed, A.P.C., M62, w/TRACER, 3-in. guns, M1918 (all models), M1, M3, M5, M6, and M7.

AMMUNITION

SHOT, fixed, A.P., M79, w/TRACER, 3-in. guns, M1918 (all models), M1, M3, M5, M6, and M7.

SHELL, fixed, H.E., 42, w/FUZE, P.D., M48, 3-in. (15-pdr.) gun, M1902M1, and 3-in. guns, M5, M6, and M7.*

SHELL, fixed, H.E., M42A1, w/FUZE, P.D., M48, 3-in. (15-pdr.) gun, M1902M1, and 3-in. guns, M5, M6, and M7.*

SHELL, fixed, H.E., M42A1, w/FUZE, P.D., M48A1, 3-in. (15-pdr.) gun, M1902M1, and 3-in. guns, M5, M6, and M7.†

Practice Ammunition

SHOT, fixed, T.P., M85, w/TRACER, 3-in. guns, M1918 (all models), M1, M3, M5, M6, and M7.

Drill Ammunition

CARTRIDGE, drill 4A1, w/FUZE, dummy, 21-sec., M42A1, 3-in. guns, M1918 (all models), M1, M3, M5, M6, and M7, and 3-in. (16-pdr.) gun, M1902M1.

CARTRIDGE, drill, M10, w/FUZE, dummy, 21-sec., M42A1, 3-in. guns, M1918 (all models), M1, M3, M5, M6, and M7, and 3-in. (16-pdr.) gun, M1902M1.

CARTRIDGE, drill, M15, w/FUZE, dummy, M59, 3-in. guns, M1918 (all models), M1, M3, M5, M6, and M7, and 3-in. (15-pdr.) gun, M1902M1.

Blank Ammunition

AMMUNITION, blank, 3-in. (15-pdr.) gun, M1902M1, and 3-in. guns, M1918 (all models), M1, M3, M5, M6, and M7.

AMMUNITION FOR GUN, MACHINE, CAL. .50, BROWNING, M2, HEAVY BARREL

Service Ammunition

CARTRIDGE, armor-piercing, cal. .50, M2.
CARTRIDGE, ball, cal. .50, M2.
CARTRIDGE, incendiary, cal. .30, M1.
CARTRIDGE, tracer, cal. .50, M1.

Blank Ammunition

CARTRIDGE, blank, cal. .50, M1.

Dummy Ammunition

CARTRIDGE, dummy, cal. .50, M1.
CARTRIDGE, dummy, cal. .50, M2.

AMMUNITION FOR GUN, SUBMACHINE, CAL. .45, THOMPSON, M1928A1

Service Ammunition

CARTRIDGE, ball, cal. .45, M1911.

Dummy Ammunition

CARTRIDGE, dummy, cal. .45, M1921.

---

*SQ and 0.05-second delay.
†SQ and 0.15-second delay.

AMMUNITION FOR RIFLE, U.S., CAL. .30, M1903 (WITH LAUNCHER, GRENADE, M1)

Service Ammunition

CARTRIDGE, armor-piercing, cal. .30, M2.
CARTRIDGE, ball, cal. .30, M1.
CARTRIDGE, ball, cal. .30, M2.
CARTRIDGE, tracer, cal. .30, M1.

Blank Ammunition

CARTRIDGE, blank, cal. .30, M1909.

Dummy Ammunition

CARTRIDGE, dummy, cal. .30, M1906 (corrugated).

AMMUNITION FOR CARBINE, CAL. .30, M1

Service Ammunition

CARTRIDGE, carbine, cal. .30, M1.
CARTRIDGE, grenade, carbine, cal. .30, M6.*

Dummy Ammunition

CARTRIDGE, carbine, dummy, cal. .30, M1.

GRENADES

Service Grenades

GRENADE, hand, fragmentation, Mk. II, with hand grenade igniting fuze, M10A2.
GRENADE, hand, incendiary, AN-M14, with hand grenade igniting fuze, M200A1.†
GRENADE, hand, smoke, white, AN-M8, with hand grenade igniting fuze, M200A1.†
GRENADE, AT, M9A1.

Practice and Training Grenades, and Replaceable Parts

GRENADE, hand, training, Mk. IA1.
GRENADE, AT, practice, M11.
GRENADE, AT, practice, M11A1.
GRENADE, AT, practice, M11A2.
FIN, assembly, for practice rifle grenade, M11.
FIN, assembly, for AT practice grenade, M11A1.
FIN, assembly, for practice rifle grenade, M11A2.
OGIVE, assembly, for practice rifle grenade, M11A2.
ADAPTER, grenade-projection, M1.‡

---

*Special blank cartridge for use in the carbine for projecting grenades.

†Procurement from Chemical Warfare Service.

‡For projecting Grenade, hand, fragmentation, Mk. II, with hand grenade igniting fuze, M10A2, from the rifle or carbine with appropriate launcher and special grenade cartridge. Used in conjunction with CLIP, launcher positioning. Clips and special grenade cartridge issued and packed with adapters.

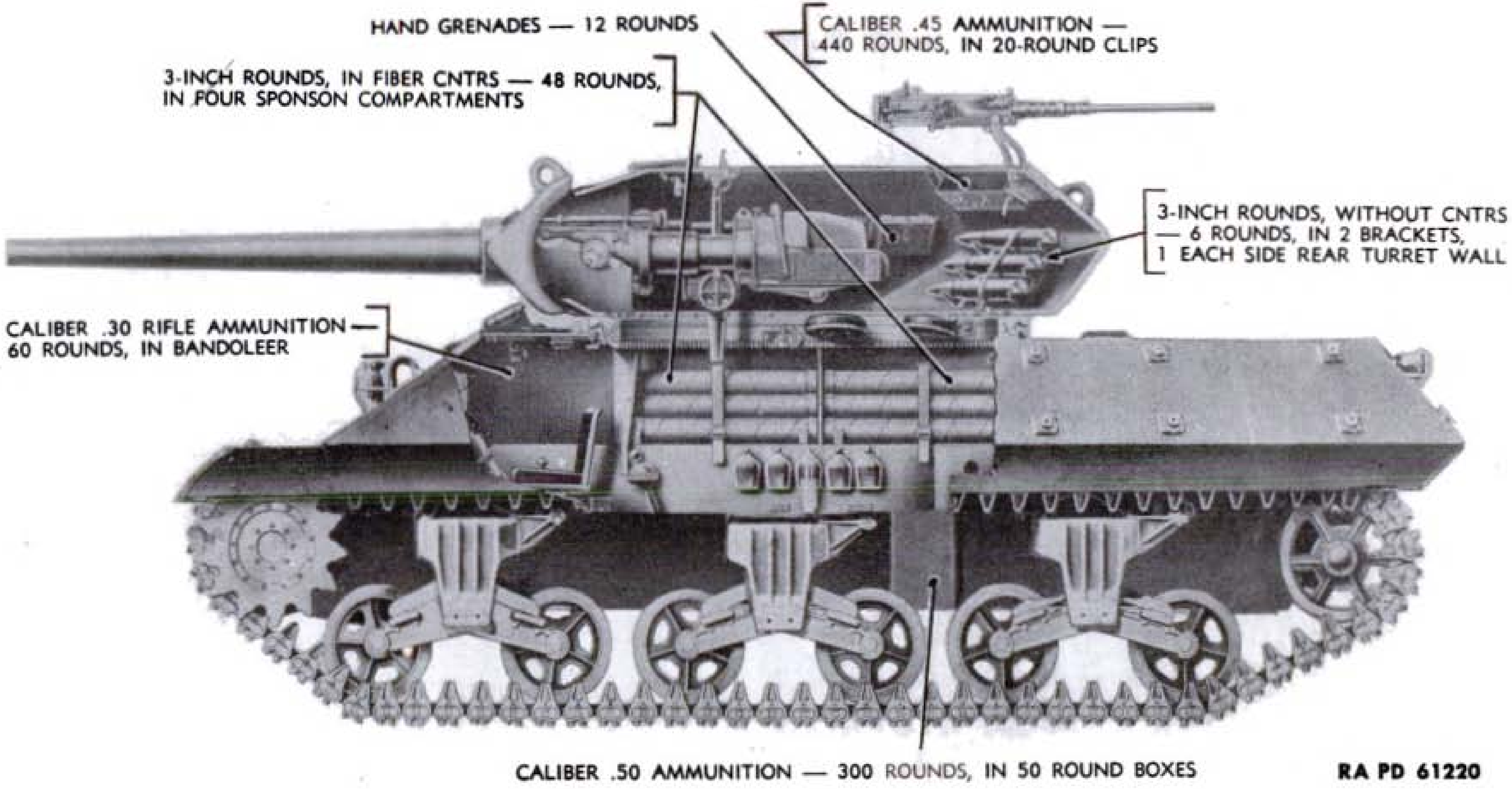

Figure 193—Ammunition Stowage, 3-inch Gun Motor Carriage M10

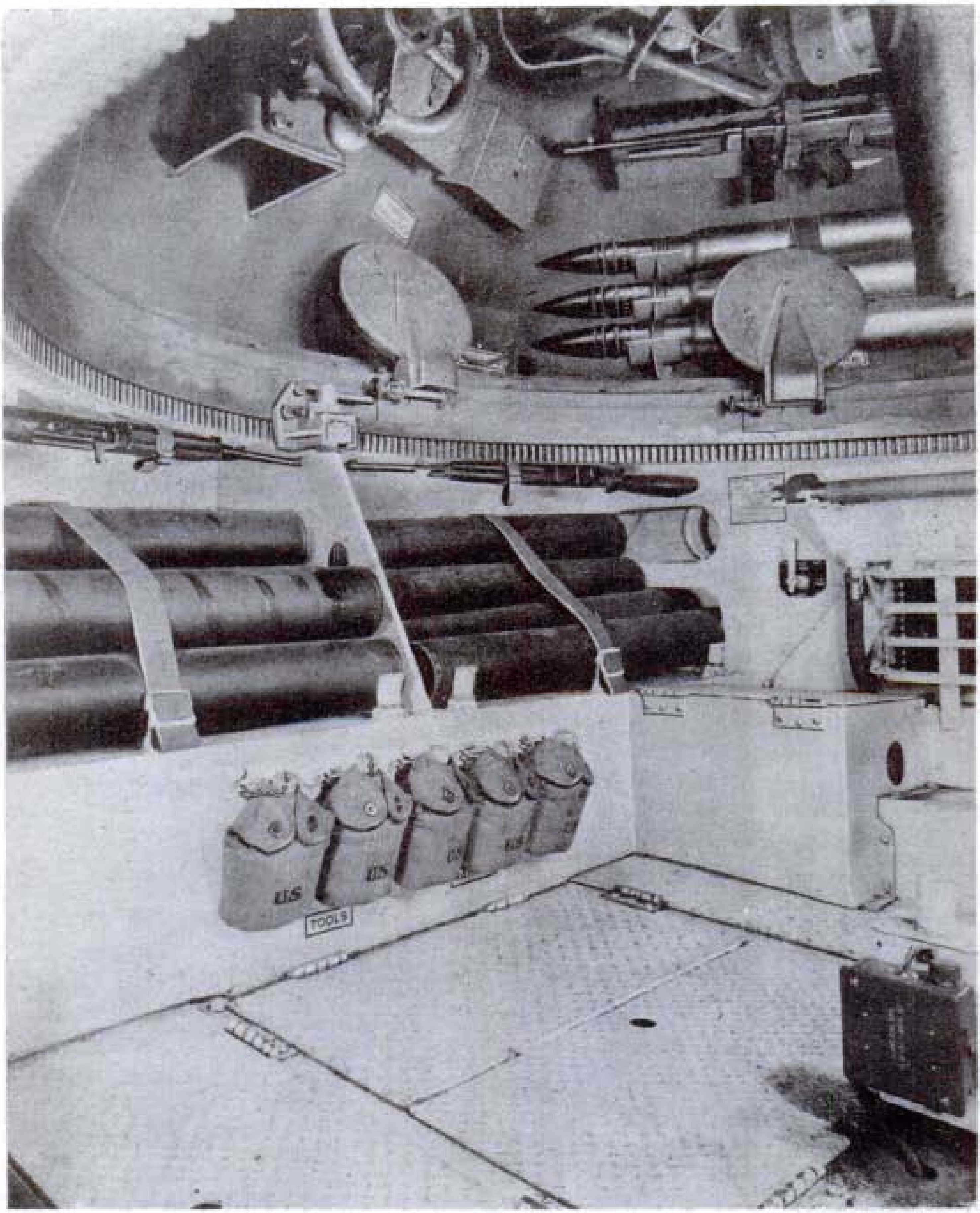

RA PD 61221

Figure 194—Ammunition Stowage—Right Side

259. STOWAGE OF AMMUNITION.

a. Provision for stowage of the ammunition in the carriage is indicated in Table II below and in figures 193, 194, and 195. The table has been prepared to serve as a guide only. It is without reference to any provision for mounting brackets or stowage boxes which may be occasioned by special conditions in the field, or to ammunition which may be carried by means of a towed trailer.

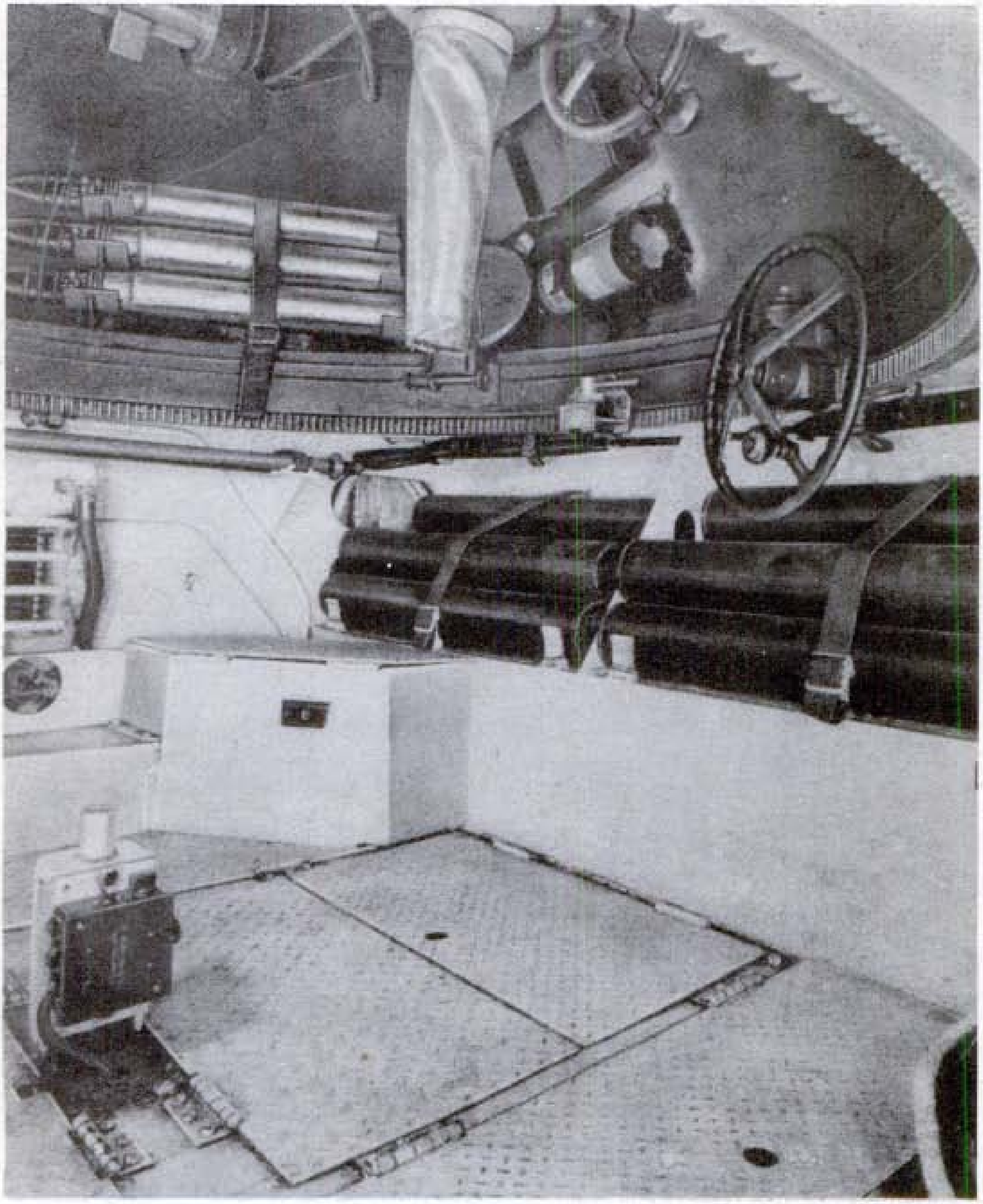

RA PD 61222

Figure 195—Ammunition Stowage—Left Side

TABLE II—AMMUNITION STOWAGE

Ammunition	Stowage Capacity	Stowage Position
3-inch rounds— 75% armor-piercing	54 rounds	6 rounds without containers, in 2 three-round brackets on rear turret wall.
25% high explosive		48 rounds in fiber containers in four sponson compartments.

3-INCH GUN MOTOR CARRIAGE M10

Ammunition	Stowage Capacity	Stowage Position
Caliber .50	300 rounds	In 50-round boxes in brackets under turret platform.
Caliber .45	460 rounds	440 rounds in 20-round clips in brackets on right rear turret wall. 20 rounds in clip on gun.
Caliber .30, carbine	450 rounds	In bandoleer on right front sponson plate near the assistant driver.
Hand grenades	12 grenades	In two boxes on right turret wall just forward of caliber .45 ammunition bracket.

Figure 196—Projectile, Fixed, A.P.C., M62, w/Fuse, B.D., M66 or M66A1, and Tracer, 3" AA. Guns, M1918 (all models), M1, and M3, and 3" Guns, M5, M6, and M7

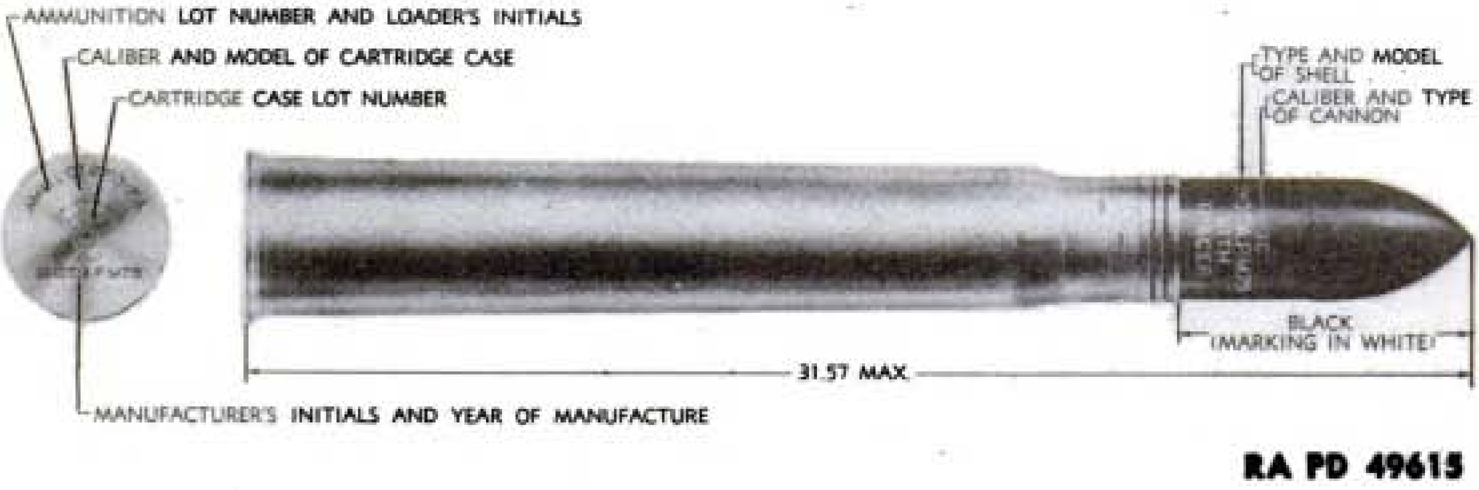

Figure 197—Shot, Fixed, A.P., M79, w/Tracer, 3" A.A. Guns, M1918 (all models), M1, and M3, and 3" Guns, M5, M6, and M7

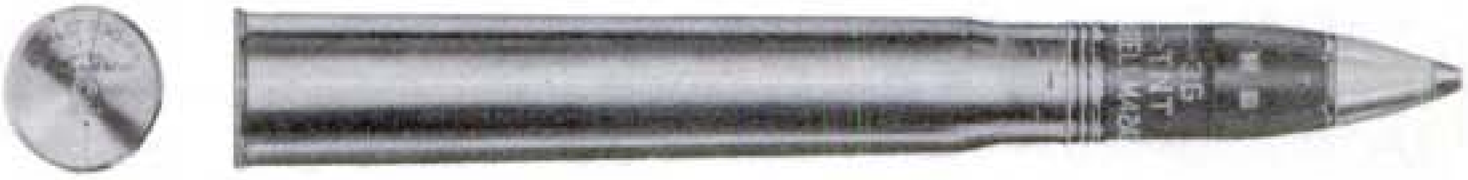

RA PD 49614A

Figure 198—Shell, Fixed, H.E., M42A1, w/Fuse, P.D., M42A1, 3" (15-pdr.) Gun, M1902M1 and 3" Guns, M5, M6, and M7

260. FIELD REPORT OF ACCIDENTS.

a. When an accident involving the use of ammunition occurs during training practice, the procedure prescribed in Section VII, AR 750-10, will be observed by the Ordnance officer under whose supervision the ammunition is maintained or issued. Where practicable, reports covering malfunctions of ammunition in combat will be made to the Chief of Ordnance, giving the type of malfunction, type of ammunition, the lot number of the complete rounds or separate loading components, and condition under which fired.

PART FOUR

Section XXXI

SHIPMENT AND TEMPORARY STORAGE

261. GENERAL INSTRUCTIONS.

a. Preparation for domestic shipment of the vehicle is the same, with the exception of minor added precautions, as preparation for temporary storage. Preparation for shipment by rail includes instructions for loading the vehicle, blocking necessary to secure the vehicle on freight cars, number of vehicles per freight car, clearance, weight, and other information necessary to properly prepare the vehicle for domestic rail shipment. For more detailed information and for preparation for indefinite storage, refer to AR 850-18.

262. PREPARATION FOR TEMPORARY STORAGE.

a. Vehicles to be prepared for temporary storage are those ready for immediate service but not used for less than 30 days. If vehicles are to be indefinitely stored after shipment by rail, they will be prepared for such storage at their destination.

b. If the vehicles are to be temporarily stored or bivouacked, take the following precautions:

(1) LUBRICATION. Lubricate the vehicle completely (par. 31).

(2) COOLING SYSTEM. If freezing temperature may normally be expected during the limited storage or shipment period, test the coolant with a hydrometer and add the proper quantity of antifreeze compound to afford protection from freezing at the lowest temperature anticipated during the storage or shipping period. Completely inspect the cooling system for leaks.

(3) BATTERY. Check battery and terminals for corrosion, and if necessary, clean and thoroughly service battery (par. 186).

(4) TIRES. Clean, inspect, and properly inflate all tires, including spares. Replace with serviceable tires all tires requiring repairing on retreading. Do not store tired vehicles on floors, cinders, or other surfaces which are soaked with oil or grease. Wash off immediately any oil, grease, gasoline, or kerosene which comes in contact with tires under any circumstances.

(5) ROAD TEST. The preparation for limited storage will include a road test, after the battery, cooling system, and lubrication service,

to check on the general condition of the engine. Correct any defects noted in the vehicle operation before the vehicle is stored, or note on a tag attached to the steering levers, stating the repairs needed or describing the condition present. A written report of these items will then be made to the officer in charge.

(6) FUEL IN TANKS. It is not necessary to remove fuel from the vehicle tanks for shipment within the United States, nor to label the tanks under Interstate Commerce Commission Regulations. Leave fuel in the tanks except when storing in locations where Fire Ordinances or other local regulations require removal of all gasoline before storage.

(7) EXTERIOR OF VEHICLE. Remove rust appearing on any part of the vehicle exterior with flint paper. Repaint painted surfaces whenever necessary to protect wood or metal. Coat exposed polished metal surfaces susceptible to rust, such as cables and chains, with medium grade preservative lubricating oil. Close firmly all doors, hatches, windows, and openings. Make sure paulins are in place and firmly secured. Leave rubbebr mats, when provided, in an unrolled position on the floor, not rolled or curled up. Equipment, such as pioneer tools, track tools, and fire extinguishers, will remain in place on the vehicle.

(8) INSPECTION. Make a systematic inspection just before shipment or temporary storage, to insure all above steps have been covered and that the vehicle is ready for operation on call. Make a list of all missing or damaged items and attach it to the steering levers. Refer to Before-operation Service (par. 26).

(9) BRAKES. Release brakes and chock the tracks.

c. **Inspections in Limited Storage.** Vehicles in limited storage will be inspected weekly for condition of battery and, in case of anticipated freezing weather, cooling system. If water is added to the battery when freezing weather is anticipated, recharge the battery with a portable charger or remove the battery for charging. Do not attempt to charge the battery by running the engine. If freezing temperature is expected, add the proper quantity of antifreeze compound to cooling system to afford protection from freezing.

263. LOADING AND BLOCKING FOR RAIL SHIPMENT.

a. **Preparation.** In addition to the preparation described in paragraph 262, when ordnance vehicles are prepared for domestic shipment, the following preparations and precautions will be taken.

(1) EXTERIOR. Cover the body of the vehicle with the canvas cover supplied for such use during rail shipment.

(2) BATTERY. Disconnect the battery to prevent its discharge by vandalism or accident. This may be accomplished by disconnecting

the positive lead, taping the end of the lead and tying it back away from the battery.

(3) BRAKES. The brakes must be applied and the transmission placed in low gear after the vehicle has been placed in position with a brake wheel clearance of at least 6 inches (fig. 199, "A"). The vehicles will be located on the car in such a manner as to prevent the car from carrying an unbalanced load.

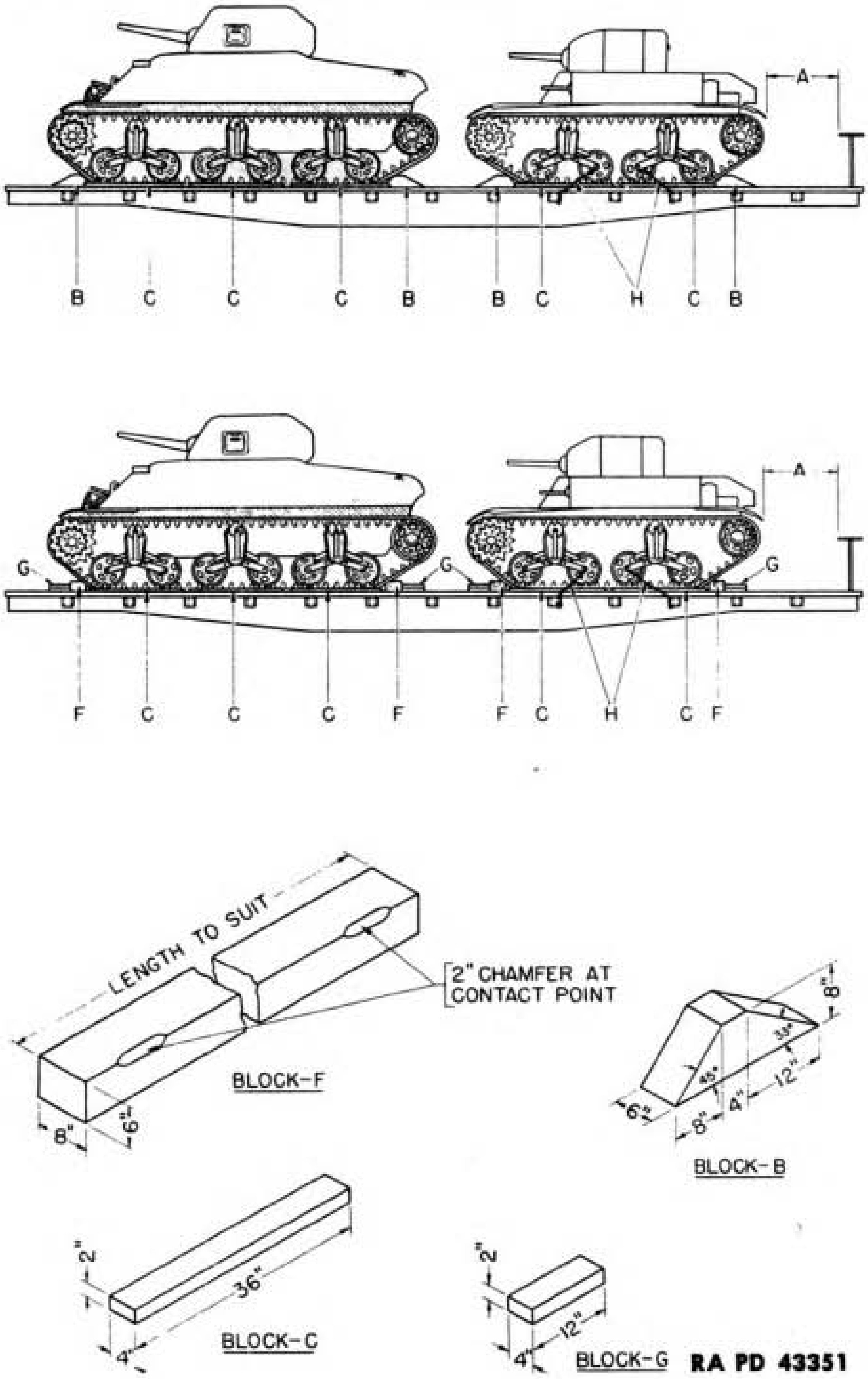

RA PD 43351

Figure 199—Blocking Requirements

(4) All cars containing ordnance vehicles must be placarded "DO NOT HUMP."

(5) Ordnance vehicles may be shipped on flat cars, end-door box cars, side-door box cars, or drop-end gondola cars, whichever type car is the most convenient.

b. Facilities for Loading. Whenever possible, load and unload vehicles from open cars under their own power, using permanent end ramps and spanning platforms. Movement from one flat car to another along the length of the train is made possible by cross-over plates or spanning platforms. If no permanent end ramp is available, an improvised ramp can be made from railroad ties. Vehicles may be loaded in gondola cars without drop-ends by using a crane. In case of shipment in side-door box cars, use a dolly-type jack to warp the vehicles into position within the car.

c. Securing Vehicles. In securing or blocking a vehicle, three motions—lengthwise, sidewise, and bouncing—must be prevented. Following are two methods involving the minimum allowed requirements for blocking medium tanks or freight cars (fig. 199).

(1) METHOD ONE. Place four "Blocks-B," one to the front and one to the rear of each track. Nail the heel of each block to the car floor with five 40-penny nails. Toenail to the car floor, that portion of each block which is under the track. Locate three "Blocks-C," on each side of the vehicle, on the outside of both tracks. These blocks may be located on the inside of the tracks, if conditions warrant. Each block will be nailed to the car floor with three 40-penny nails.

(2) METHOD TWO. Place two "Blocks-F"—one to the front and one to the rear of the tracks (fig. 199). These blocks are to be at least 99 inches long. Locate eight "Blocks-G" against "Blocks-F" to the front and to the rear of each track. Nail the lower of these blocks to the car floor with three 40-penny nails, and also the top block to the one below it with three 40-penny nails. Locate three "Blocks-C" on each side of the vehicle, on the outside of each track. These blocks may be placed on the inside of the tracks if conditions warrant. Nail each of the "Blocks-C" to the car floor with three 40-penny nails.

d. Shipping Data.

Length of vehicle (over-all)	20.20 ft
Width of vehicle (over-all)	10.00 ft
Height of vehicle (over-all)	8.20 ft
Area of car floor occupied (per vehicle)	202 sq ft
Volume occupied (per vehicle)	1,660 cu ft
Shipping weight (per vehicle)	57,000 lb
Bearing pressure (per sq ft)	282 lb

REFERENCES

STANDARD NOMENCLATURE LISTS.

Carriage, motor, 3-inch gun, M10	SNL G-130

Ammunition.

Ammunition, blank, for pack, light and medium field artillery	SNL R-5
Ammunition, fixed and semifixed, all types, for pack, including subcaliber light and medium field artillery, including complete round data	SNL R-1
Ammunition instruction material for grenades, pyrotechnics and aircraft bombs	SNL S-6
Ammunition, revolver, automatic pistol, and submachine gun	SNL T-2
Ammunition, rifle, carbine, and automatic gun	SNL T-1
Grenades, hand and rifle, and fuzing components	SNL S-4
Packing materials used by field service for small arms service ammunition	SNL T-5
Service fuzes and primers for pack, light and medium field artillery	SNL R-3

Armament.

Carbine, cal. .30, M1 and M1A1—Parts and equipment	SNL B-28
Gun, 3-in., M7; and mount, gun, 3-in., M5	SNL C-43
Gun, machine, cal. .50, Browning, M2, heavy barrel, fixed and flexible; and ground mounts—Parts and equipment	SNL A-39
Gun, submachine, cal. .45, Thompson, M1928A1, M1, and M1A1—Parts and equipment	SNL A-32
Launcher, grenade, M1 and M2—Parts and equipment	SNL B-39
Major items of group A	SNL A-1
Major items of group B	SNL B-1
Major items of pack, light and medium field artillery; and armament of these calibers for airplane and combat vehicles	SNL C-1
Rifle, U.S., cal. .30, M1903, M1903A1, and M1903A3—Parts and equipment	SNL B-3

Sighting Equipment.

Firing tables and trajectory charts	SNL F-69
Periscopes, telescopes for periscopes, and direct sighting telescopes for use in tanks	SNL F-235
Quadrant, gunner's, M1 (mils)	SNL F-140
Telescope, panoramic, M12 series	SNL F-214

REFERENCES

Maintenance.

Cleaning, preserving, and lubricating materials; recoil fluids, special oils, and miscellaneous items	SNL K-1
Soldering, brazing, and welding material, gases and related items	SNL K-2
Tools, maintenance, for repair of automatic guns, automatic gun antiaircraft materiel, automatic and semiautomatic cannon and mortars—Individual items and parts	SNL A-35
Tools, maintenance, for repair of pack, light and medium field artillery; and armament of these calibers of airplane and combat vehicles	SNL C-18
Current Standard Nomenclature Lists are as tabulated here. An up-to-date list of SNL's is maintained in the Index to Ordnance Publications	OFSB 1-1

EXPLANATORY PUBLICATIONS.

General.

Index to Ordnance Publications	OFSB 1-1
List of Publications for Training, Including Training Films and Film Strips	FM 21-6
Military Motor Transportation	TM 10-505
Military Motor Vehicles	AR 850-15
Motor Transport	FM 25-10

Armament.

3-inch Tank Gun Materiel M7	TM 9-323
Ammunition, general	TM 9-1900
Ammunition, general	OFSB 3-1
Automatic pistol, cal. .45, M1911 and M1911A1	FM 23-35
Auxiliary fire control instruments (field glasses, eye glasses, telescopes, and watches)	TM 9-575
Browning machine gun, cal. .50, HB, M2 (mounted in combat vehicles)	FM 23-65
Field artillery and field mortar ammunition	OFSB 3-3
Grenades	FM 23-30
Instruction guide, small arms data	TM 9-2200
Ordnance service in the field	FM 9-5
Qualifications in arms and ammunition training allowances	AR 775-10
Small arms ammunition	TM 9-1990
Small arms ammunition	OFSB 3-5
Targets, target materials, and rifle range construction	TM 9-855
Thompson submachine gun, cal. .45, M1928A1	FM 23-40
U. S. Carbine, cal. .30, M1	FM 23-7
U. S. Rifle, cal. .30, M1903	FM 23-10

Chemical Warfare.

Chemical decontamination, materials and equipment	TM 3-220
Defense against chemical attack	FM 21-40
Decontamination of armored force vehicles	FM 17-59

Communications.

Radio fundamentals	TM 11-455
Radio operator, the	TM 11-454
Radio set, SCR 610	TM 11-615

Maintenance and Inspection.

Automotive electricity	TM 10-580
Automotive lubrication	TM 10-540
Cleaning, preserving, lubricating, and welding materials and similar items issued by the Ordnance Dept.	TM 9-850
Electrical fundamentals	TM 1-455
Fuels and carburetion	TM 10-550
Motor vehicle inspections and preventive maintenance	TM 9-2810
Sheet metal work, body, fender, and radiator repairs	TM 10-450
Basic maintenance manual	TM 38-250

Ordnance Maintenance.

Power train, one-piece differential case, for medium tanks M3, M4 and modifications and related gun motor carriages	TM 9-1750B
General Motors twin diesel 6-71 power plant for medium tanks M3A3, M3A5, and M4A2 (1 Sept. 1942)	TM 9-1750G
Hull and Turret, hull and turret electrical system, and track suspension for 3-inch gun motor carriages M10 and M10A1	TM 9-1750L

Camouflage.

Camouflage	FM 5-20
Camouflage painting of vehicles and equipment	FM 5-21

Storage and Shipment.

Ordnance storage and shipment chart, group G—Major items	OSSC-G
Registration of motor vehicles	AR 850-10
Storage of motor vehicle equipment	AR 850-18
Rules governing the loading of mechanized and motorized army equipment, also major caliber guns, for the United States Army and Navy, on open top equipment published by Operations and Maintenance Department of Association of American Railroads.	

INDEX

INDEX

INDEX

INDEX

INDEX